WASHINGTON STATE PARKS & RECREATION COMMISSION

LAURIE CONNELLY, CHAIR

SOPHIA DANENBERG HOLLY WILLIAMS

ALI RAAD MICHAEL LATIMER

SCOTT MERRIMAN ALFIE ALVARADO-RAMOS

DIANA DUPUIS, DIRECTOR

4/16/2025
REGION MANAGER date

4/16/2025
CAPITAL PROGRAM MANAGER date

Area Manager: Janet Halstead

NISQUALLY STATE PARK

PHASE 3A - MAINTENANCE BUILDING AND WASTE WATER TREATMENT FACILITY

VICINITY MAP

NORTH

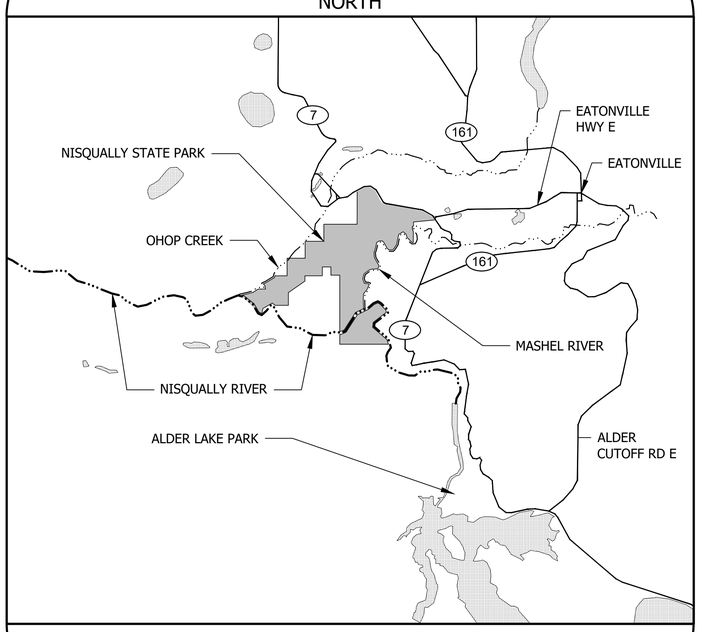

46.864922, -122.326625

PROJECT LOCATION

NORTH

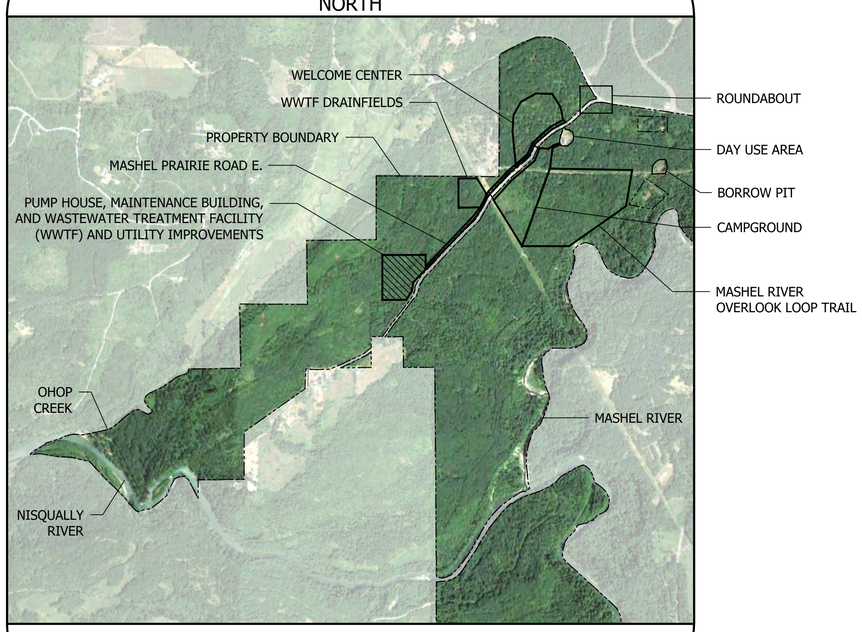

44276 & 44278 & 44280 & 44288 MASHEL PRAIRIE RD E. EATONVILLE, WA 98328
SEC-19 T-16-N R-04-E
PIERCE COUNTY TAX PARCEL NUMBER 0416201006 / 0416194008 / 0316251003

PROJECT TEAM

OWNER: STATE OF WASHINGTON
PARKS AND RECREATION COMMISSION
1111 ISRAEL ROAD SOUTHWEST
POST OFFICE BOX 42650
OLYMPIA, WASHINGTON 98504-2650
www.parks.wa.gov

OWNER'S REPRESENTATVE: WASHINGTON STATE PARKS AND RECREATION COMMISSION
1111 ISRAEL ROAD SOUTHWEST
POST OFFICE BOX 42650
OLYMPIA, WASHINGTON 98504-2650

BRIAN YEAROUT
CONSTRUCTION PROJECT ADMINISTRATOR
TELEPHONE: (360) 725-9763
brian.yearout@parks.wa.gov

PRIVATE IMPROVEMENTS

1001191
PERMIT #

01-05-2023
DATE

DEVELOPMENT ENGINEER

PIERCE COUNTY ORDINANCE NUMBER 2021-45

1. CONTACT Dennis Peterson THE AREA INSPECTOR, AT 253-798- 2539 TO COORDINATE THE PRE-CONSTRUCTION MEETING AND COUNTY INSPECTIONS. PRE-CONSTRUCTION MEETING SHALL BE REQUESTED AT LEAST 48-HOURS IN ADVANCE OF THE START OF CONSTRUCTION.
2. APPOINT A CERTIFIED EROSION AND SEDIMENT CONTROL LEAD WHO SHALL BE PROVIDED A COPY OF THE SWPPP, EROSION CONTROL PLAN & INSPECTION SCHEDULE.
3. FAILURE TO OBTAIN REQUIRED INSPECTIONS MAY ENDANGER OR DELAY PROJECT APPROVAL.
4. ALL WORK IN THE PUBLIC RIGHT-OF-WAY REQUIRES A GENERAL RIGHT-OF-WAY PERMIT FROM PIERCE COUNTY PLANNING AND PUBLIC WORKS.

PROJECT ARCHITECTURAL AND ENGINEERING CONSULTANTS

PROJECT LEAD: RWD Landscape Architects
ROBERT W. DROLL, LANDSCAPE ARCHITECT, P.S.
4405 7TH AVENUE SE, SUITE 203
LACEY, WA 98503
www.rwdroll.com

JONAH HAYES, PLA
PRINCIPAL
TELEPHONE: (360) 456-3813
CELL #: (907) 830-0248
jonah@rwdroll.com

CIVIL ENGINEER: kpff
KPFF CONSULTING ENGINEERS
612 WOODLAND SQUARE LOOP SE, SUITE 100
LACEY, WA 98503
www.kpff.com

STEVE SCHMITZ, PE
PROJECT CIVIL ENGINEER
TELEPHONE: (360) 581-4310
steve.schmitz@kpff.com

LAND SURVEYOR: kpff
KPFF CONSULTING ENGINEERS
612 WOODLAND SQUARE LOOP SE, SUITE 100
LACEY, WA 98503
www.kpff.com

JEREME CHAPMAN
PRINCIPAL
TELEPHONE: (360) 292-4943
jereme.chapman@kpff.com

ELECTRICAL ENGINEER: CROSS ENGINEERS, INC
CROSS ENGINEERS, INC
923 MLK Jr. Way
Tacoma, WA 98405
info@crossengineers.com
Phone: (253) 759-0118
Job Number: 20-119
CROSS ENGINEERS, INC.
923 MARTIN LUTHER KING JR. WAY
TACOMA, WA 98504
www.crossengineers.com

SCOTT KELLY
PROJECT ELECTRICAL ENGINEER
TELEPHONE: (253) 759-0118
scottk@crossengineers.com

ARCHITECT: KMB architects
KMB ARCHITECTS, INC., P.S.
906 COLUMBIA ST SW, SUITE 400
OLYMPIA, WA 98501
www.kmb-architects.com

JAMES HILL, RA
PROJECT ARCHITECT
TELEPHONE: (360) 292-1217
JamesHill@KMB-architects.com

WWTF ENGINEER: Parametrix
PARAMETRIX, INC.
1019 39TH AVE SE, SUITE 100
PUYALLUP, WA 98374
www.parametrix.com

BRIAN E. BUNKER
PROJECT ENGINEER
TELEPHONE: (253) 604-6798
bbunker@parametrix.com

PROJECT SUMMARY

THE WASHINGTON STATE PARKS AND RECREATION COMMISSION IS DEVELOPING PHASE 3A OF NISQUALLY STATE PARK WHICH INCLUDES A WASTE WATER TREATMENT FACILITY, PUMP HOUSE, MAINTENANCE BUILDING EXPANSION AND UTILITY IMPROVEMENTS. THE WASTE WATER TREATMENT FACILITY AND PUMP HOUSE WILL PROVIDE THE REQUIRED WATER AND WASTE DISPOSAL FOR ALL EXISTING AND PROPOSED PHASES OF NISQUALLY STATE PARK. THE MAINTENANCE BUILDING EXPANSION WILL ROUGHLY DOUBLE THE SIZE OF THE EXISTING BUILDING TO ACCOMMODATE PARK STAFF MAINTENANCE NEEDS. AND UTILITY IMPROVEMENTS WILL BE STUBBED TO LOCATIONS WHERE FUTURE DEVELOPMENT IS PLANNED.

PARCEL INFORMATION

ZONING:	PR AND R-10
PROPERTY NAME:	NISQUALLY STATE PARK
PROPERTY TYPE:	PARKS & RECREATION AND RURAL 10
PRESENT USE:	TRAILS
PARCELS TOTAL AREA:	493.1 ACRES
Q-S-T-R:	SE-19-16N-04E
WATER SYSTEM:	GROUNDWATER WELL
SEWER SYSTEM:	ON-SITE SEPTIC SYSTEM
ACCESS:	PUBLIC, PIECE COUNTY R.O.W.
STREET SURFACE:	PAVED

ABBREVIATIONS

ABI	ALTERNATE BID ITEM
ABN	ABANDON
AC	ASPHALTIC CONCRETE
ADD	ADDITIVE
ALT	ALTERNATE
ALUM	ALUMINUM
APPROX	APPROXIMATELY
A.T.	ALL-THREAD
@	AT
BC	BOTTOM OF CURB
BLDG	BUILDING
BLKG	BLOCKING
BM	BENCH MARK
BOC	BACK OF CURB
BW	BOTTOM OF WALL
CB	CARRIAGE BOLT
CF	CUBIC FOOT
CIE	COLLECTOR INVERT ELEVATION
CLR	CLEARING, CLEARANCE
CMP	CORRUGATED METAL PIPE
CO	CONTRACTING OFFICER
CONT	CONTINUOUS
CONC	CONCRETE
CORR	CORRUGATED
CP	CENTER POINT
CS	COUNTERSINK
CSBC	CRUSHED SURFACING BASE COURSE
CSTC	CRUSHED SURFACING TOP COURSE
CY	CUBIC YARD
DEMO	DEMOLISH / DEMOLITION
DET	DETAIL
DF	DOUG FIR
DIA	DIAMETER
DTL	DETAIL
E	EAST
EA	EACH
EL	ELEVATION
ELEC	ELECTRICAL
EOP	EDGE OF PAVEMENT
EQ	EQUAL
EQ SP	EQUAL SPACING
EX	EXISTING
FDN	FOUNDATION
FFE	FINISH FLOOR ELEVATION
FIN GR	FINISH GRADE
FT	FOOT, FEET
FTG	FOOTING
GA	GAUGE
GAL	GALLON
GALV	GALVANIZED
GLB	GLUED LAMINATED BEAM
GPM	GALLONS PER MINUTE
GW	SANDY GRAVEL
HL	HELICAL
HMA	HOT MIX ASPHALT
HP	HIGH POINT
HSS	HOLLOW STRUCTURAL SECTIONS
HT	HEIGHT
HZ	HORIZONTAL
ID	INSIDE DIAMETER
I.E.	INVERT ELEVATION
IN	INCH
JT	JOINT
L	LEFT, LONG
LB	LAG BOLT
LP	LOW POINT
LS	LAG SCREW
MB	MACHINE BOLT+
ME	MATCH EXISTING
MAT'L	MATERIAL
MAX	MAXIMUM
MIL	1/1000th INCH
MIN	MINIMUM
MPOC	MID-POINT OF CURVE
N	NORTH
NIC	NOT IN CONTRACT
NO.	NUMBER
NOM	NOMINAL
NTS	NOT TO SCALE
OC	ON CENTER
OD	OUTSIDE DIAMETER
OFCI	OWNER FURNISHED CONTRACTOR INSTALLED
OR	OWNER'S REPRESENTATIVE
PC	POINT OF CURVATURE
PCC	PORTLAND CEMENT CONCRETE
PERF	PERFORATED
PERIM	PERIMETER
PI	POINT OF INTERSECTION
PLT	PLATE
PLYWD	PLYWOOD
POLY	POLYETHYLENE
PRO	PROPOSED
PSE	PUGET SOUND ENERGY
PSI	POUNDS PER SQUARE INCH
PT	POINT OF TANGENCY
PT	PRESSURE TREATED
PVC	POLYVYNYL CHLORIDE
PVC	POINT OF VERTICAL CURVATURE
PVI	POINT OF VERTICAL INTERSECTION
PVMT	PAVEMENT
PVT	POINT OF VERTICAL TANGENCY
R	RADIUS
REQ'D	REQUIRED
RP	RADIUS POINT
S	SLOPE
SCH	SCHEDULE
SEC	SECTION
SHLDR	SHOULDER
SIM	SIMILAR
SM	SILTY SAND
SP'D	SPACED
SQ	SQUARE
SS	SANITARY SEWER
STD	STANDARD
STA	STATION
STL	STEEL
SY	SQUARE YARD
TC	TOP OF CURB
TESC	TEMPORARY EROSION & SEDIMENT CONTROL
THK	THICK
T.O.S.	TOP OF SLAB
TPCHD	TACOMA-PIERCE COUNTY HEALTH DEPARTMENT
TW	TOP OF WALL
TYP	TYPICAL
UNO	UNLESS NOTED OTHERWISE
VC	VERTICAL CURVE
VERT	VERTICAL
WD	WIDTH
W/	WITH
W/IN	WITHIN
W/O	WITHOUT
WWM	WELDED WIRE MESH
WWTF	WASTE WATER TREATMENT FACILITY

PROPERTY NOTES

PROPERTY ADDRESS:	43371 MASHEL PRAIRIE RD E EATONVILLE, WA 98328
PARCEL TAX NUMBER(S):	0416173022 / 0416202008 / 0416202007
LEGAL DESCRIPTION:	SECTION 19 TOWNSHIP 16N RANGE 04E QUARTER 34 SE OF NE ALSO SE OF SW ALSO W 1/2 OF SE & NE OF SE EXC THAT POR LY SELY OF C/L OF MEDICAL SPRINGS CO RD OUT OF 1-009 SEG H-0228 CH/JU 8/30/95JU

SITE INFORMATION

PARCELS SIZE TOTAL:	296.2 ACRES
PROJECT SITE AREA (LIMIT OF WORK):	6 ACRES
PROPOSED IMPERVIOUS SURFACE TOTALS:	1.17 ACRES
PROPOSED IMPERVIOUS SURFACES AS A PERCENTAGE OF PARCEL SIZE:	.4 %

IMPERVIOUS SURFACE	AREA
EXISTING IMPERVIOUS SURFACE	4.64 ACRES
PROPOSED	1.17 ACRES
TOTAL IMPERVIOUS SURFACE	5.81 ACRES

NOTE: QUANTITIES PROVIDED HEREIN ARE FOR INFORMATION ONLY. CONTRACTOR IS RESPONSIBLE FOR DERIVING THEIR OWN QUANTITIES.

BID SET

SHEET 2 OF 226

CAD NO.

NO.	REVISIONS	INT.	APP.	DATE

ACTION	BY	DATE
DESIGNED		
DRAWN		
CHECKED (FIELD)		
CHECKED (HDQTS.)		

STATE OF WASHINGTON
JONAH HAYES
No. 24012362 EXP. 09/16/2026
LICENSED LANDSCAPE ARCHITECT

REGISTERED STAMP

WASHINGTON STATE PARKS AND RECREATION COMMISSION

NISQUALLY STATE PARK

PHASE 3A MAINTENANCE BUILDING AND WWTF

PROJECT TEAM & NOTES

G1.1

SCALE

PARKS FILE#

GENERAL SHEETS

SHEET	#	DESCRIPTION
G1.0	1	COVER SHEET
G1.1	2	PROJECT TEAM & NOTES
G1.2	3	SHEET LIST
G1.3	4	SHEET LIST
G2.0	5	KEY MAP
G2.1	6	NOTICE OF CONCURRENT WORK
G3.0	7	BORROW PIT HAUL ROUTE

SCHEDULE A DRAWING SHEETS

SHEET	#	DESCRIPTION
		PUMP HOUSE & MAINTENANCE
A-D1.0	8	EXISTING CONDITIONS
A-D2.0	9	OVERALL DEMO AND TESC PLAN
A-D2.1	10	PUMP HOUSE DEMO AND TESC PLAN
A-D2.2	11	MAINTENANCE BUILDING DEMO AND TESC PLAN
A-D2.3	12	MASHEL PRAIRIE ROAD DEMO AND TESC PLAN
A-D2.4	13	MASHEL PRAIRIE ROAD DEMO AND TESC PLAN
A-D2.5	14	MASHEL PRAIRIE ROAD DEMO AND TESC PLAN
A-D3.0	15	DEMO AND TESC DETAILS
A-D3.1	16	DEMO AND TESC DETAILS & NOTES
A-C1.0	17	OVERALL SITE PLAN
A-C1.1	18	SITE PLAN - PUMP HOUSE
A-C1.2	19	SITE PLAN - MAINTENANCE BUILDING
A-C2.0	20	HOST CAMPSITE ENLARGEMENT
A-C3.0	21	SITE DETAILS
A-C3.1	22	SIGNAGE AND STRIPING DETAILS
A-C3.2	23	SITE DETAILS
A-C4.0	24	GRADING & DRAINAGE PLAN - PUMP HOUSE
A-C4.1	25	GRADING & DRAINAGE PLAN - MAINTENANCE BUILDING
A-C4.2	26	GRADING & DRAINAGE PLAN - HOST CAMPSITE
A-C5.0	27	CROSS SECTION
A-C6.0	28	DRAINAGE DETAILS
A-C7.0	29	FENCE & GATE PLAN - PUMP HOUSE
A-C7.1	30	FENCE & GATE PLAN - MAINT. BLDG.
A-C8.0	31	GATE LAYOUT - PUMP HOUSE
A-C8.1	32	FENCE & GATE DETAILS - PUMP HOUSE
A-C8.2	33	GATE LAYOUT - MAINT. BLDG.
A-C8.3	34	FENCE & GATE DETAILS - MAINT. BLDG.
A-C8.4	35	FENCE & GATE DETAILS
A-L1.0	36	RESTORATION PLAN - PUMP HOUSE
A-L1.1	37	RESTORATION PLAN - MAINTENANCE
A-L1.2	38	RESTORATION PLAN - MASHEL PRAIRIE ROAD
A-L1.3	39	RESTORATION PLAN - MASHEL PRAIRIE ROAD
A-L1.4	40	RESTORATION PLAN - MASHEL PRAIRIE ROAD
A-L2.0	41	RESTORATION PLANTING DETAILS
		ARCHITECTURE
GI-201	42	GENERAL CODE INFORMATION
GI-301	43	AIR BARRIER
AD-101	44	REFERENCE DEMOLITION FLOOR PLAN
AD-161	45	REFERENCE DEMOLITION ROOF PLAN
A-101	46	REFERENCE FLOOR PLAN
A-151	47	REFLECTED CEILING PLAN
A-161	48	REFERENCE ROOF PLAN
A-201	49	EXTERIOR ELEVATIONS
A-202	50	EXTERIOR ELEVATIONS
A-250	51	INTERIOR ELEVATIONS
A-251	52	INTERIOR ELEVATIONS & ENL FLOOR PLAN
A-301	53	BUILDING & WALL SECTIONS
A-302	54	VERTICAL CIRCULATION
A-502	55	FLOOR AND ROOF TYPES
A-521	56	EXTERIOR DETAILS
A-561	57	CEILING DETAILS
A-585	58	MISCELLANEOUS DETAILS
A-601	59	DOOR & FRAME SCHEDULE
A-621	60	FINISH SCHEDULE
GI-201	61	PUMP HOUSE - GENERAL CODE INFORMATION

SHEET	#	DESCRIPTION
GI-301	62	PUMP HOUSE - AIR BARRIER
A-101	63	PUMP HOUSE - REFERENCE FLOOR PLANS
A-151	64	PUMP STATION - REFLECTED CEILING & ROOF PLANS
A-201	65	PUMP HOUSE - EXTERIOR ELEVATIONS
A-301	66	PUMP HOUSE - BUILDING SECTIONS
A-501	67	PUMP - WALL, FLOOR, ROOF TYPES & INTERIOR ELEVATIONS
A-511	68	FOUNDATION DETAILS
A-541	69	PUMP HOUSE - EXTERIOR DOOR & FRAME DETAILS
A-571	70	PUMP HOUSE - ROOF DETAILS
A-601	71	PUMP HOUSE - DOOR & FRAME SCHEDULE
A-621	72	PUMP HOUSE - FINISH SCHEDULE
		STRUCTURAL
S1.0	73	MAINTENANCE BUILDING - STRUCTURAL NOTES
S1.1	74	MAINTENANCE BUILDING - SPECIAL INSPECTION & SCHEDULES
S2.1	75	MAINTENANCE BUILDING - FOUNDATION PLAN
S5.0	76	MAINTENANCE BUILDING - MEZZANINE PLAN
S0.1	77	MAINTENANCE BUILDING - FOUNDATION DETAILS
S0.2	78	MAINTENANCE BUILDING - MEZZANINE DETAILS
S1.1	79	PUMP HOUSE - STRUCTURAL NOTES
S1.2	80	PUMP HOUSE - SPECIAL INSPECTIONS & TABLES
S5.1	81	PUMP HOUSE - FOUNDATION AND ROOF FRAMING PLANS
S5.2	82	PUMP HOUSE - STRUCTURAL DETAILS
		MECHANICAL, PLUMBING & FIRE PROTECTION
M-001	83	MAINTENANCE BUILDING - LEGEND & NOTES
M-002	84	MAINTENANCE BUILDING - SCHEDULES
M-101	85	MAINTENANCE BUILDING - FIRST FLOOR HVAC PLAN
M-201	86	MAINTENANCE BUILDING - ELEVATIONS
M-501	87	MAINTENANCE BUILDING - DETAILS
P-001	88	MAINTENANCE BUILDING - LEGEND & NOTES
P-002	89	MAINTENANCE BUILDING - SCHEDULES
P-101	90	MAINTENANCE BUILDING - FOUNDATION PLUMBING PLAN
P-102	91	MAINTENANCE BUILDING - FIRST FLOOR PLUMBING PLAN
P-501	92	MAINTENANCE BUILDING - DETAILS
		WATER PLAN & PROFILE
C3.0	93	OVERALL UTILITY PLAN
C3.1	94	MAINTENANCE AREA UTILITY PLAN
C3.2	95	WATER PLAN & PROFILE
C3.3	96	WATER & SEWER PLAN & PROFILE
C3.4	97	SEWER PLAN & PROFILE
C3.5	98	WATER & SEWER PLAN & PROFILE
C3.6	99	WATER & SEWER PLAN & PROFILE
C3.7	100	WATER & SEWER PLAN & PROFILE
C3.8	101	WATER & SEWER PLAN & PROFILE
C3.9	102	WATER & SEWER PLAN & PROFILE
C3.10	103	WATER & SEWER PLAN & PROFILE
C3.11	104	WATER & SEWER PLAN & PROFILE
C3.12	105	PUMP HOUSE AREA IMPROVEMENTS PLAN
C3.13	106	PUMP HOUSE PLAN
C3.14	107	RESERVOIR SCHEMATIC
C3.15	108	RESERVOIR DETAILS
C3.16	109	RESERVOIR DETAILS
C3.17	110	WATER TREATMENT DETAILS
C3.18	111	WATER DETAILS
C3.19	112	WATER DETAILS

SHEET	#	DESCRIPTION
C3.20	113	SEWER DETAILS
C3.21	114	SEWER DETAILS
C3.22	115	WATER & SEWER DETAILS
		ELECTRICAL PLANS
E001	116	ELECTRICAL SYMBOLS LEGEND
E002	117	LIGHTING FIXTURE SCHEDULE/ GENERAL NOTES
E100	118	PARTIAL ELECTRICAL SITE PLAN
E101	119	MAINTENANCE BUILDING PARTIAL ELECTRICAL SITE PLAN
E102	120	PUMP HOUSE PARTIAL ELECTRICAL SITE PLAN
E103	121	CAMP HOST PARTIAL ELECTRICAL SITE PLAN
E201	122	MAINTENANCE BUILDING LIGHTING FLOOR PLAN
E202	123	MAINTENANCE BUILDING LIGHTING 2ND FLOOR PLAN
E301	124	MAINTENANCE BUILDING POWER/SIGNAL FLOOR PLAN
E302	125	MAINTENANCE BUILDING POWER/SIGNAL 2ND FLOOR PLAN
E401	126	MAINTENANCE BUILDING POWER RISER
E402	127	MAINTENANCE BUILDING ELECTRICAL SCHEDULES
E403	128	SITE CONDUIT/CONDUCTOR SCHEDULE
E501	129	ELECTRICAL DETAILS

SITE SHEET KEY

A-X#.#

BID SCHEDULE A DESIGNATOR

SHEET REFERENCE

BID SET

Call 811 two business days before you dig

SHEET 3 OF 226

PRIVATE IMPROVEMENTS

1001191 PERMIT #

01-05-2023 DATE

DEVELOPMENT ENGINEER

PIERCE COUNTY ORDINANCE NUMBER 2021-45

1. CONTACT Dennis Peterson THE AREA INSPECTOR, AT 253-798- 2539 TO COORDINATE THE PRE-CONSTRUCTION MEETING AND COUNTY INSPECTIONS. PRE-CONSTRUCTION MEETING SHALL BE REQUESTED AT LEAST 48-HOURS IN ADVANCE OF THE START OF CONSTRUCTION.
2. APPOINT A CERTIFIED EROSION AND SEDIMENT CONTROL LEAD WHO SHALL BE PROVIDED A COPY OF THE SWPPP, EROSION CONTROL PLAN & INSPECTION SCHEDULE.
3. FAILURE TO OBTAIN REQUIRED INSPECTIONS MAY ENDANGER OR DELAY PROJECT APPROVAL.
4. ALL WORK IN THE PUBLIC RIGHT-OF-WAY REQUIRES A GENERAL RIGHT-OF-WAY PERMIT FROM PIERCE COUNTY PLANNING AND PUBLIC WORKS.

CAD NO.

NO.	REVISIONS	INT.	APP.	DATE

ACTION	BY	DATE
DESIGNED		
DRAWN		
CHECKED (FIELD)		
CHECKED (HDQTS.)		

STATE OF WASHINGTON JONAH HAYES No. 24012362 EXP. 09/16/2023 LICENSED LANDSCAPE ARCHITECT

REGISTERED STAMP

WASHINGTON STATE PARKS AND RECREATION COMMISSION

NISQUALLY STATE PARK

PHASE 3A MAINTENANCE BUILDING AND WWTF

SHEET LIST

G1.2

SCALE

PARKS FILE#

O:\2018\18062A New Full Service Park Design Services\Drawings\Sheets\Phase 3\1-General Sheets\G1.2 Sheet List - BID SET 1.dwg
May-05-25 4:24pm

PRIVATE IMPROVEMENTS

1001191
PERMIT #

01-05-2023
DATE

DEVELOPMENT ENGINEER

PIERCE COUNTY ORDINANCE NUMBER 2021-45

1. CONTACT Dennis Peterson THE AREA INSPECTOR, AT 253-798- 2539 TO COORDINATE THE PRE-CONSTRUCTION MEETING AND COUNTY INSPECTIONS. PRE-CONSTRUCTION MEETING SHALL BE REQUESTED AT LEAST 48-HOURS IN ADVANCE OF THE START OF CONSTRUCTION.
2. APPOINT A CERTIFIED EROSION AND SEDIMENT CONTROL LEAD WHO SHALL BE PROVIDED A COPY OF THE SWPPP, EROSION CONTROL PLAN & INSPECTION SCHEDULE.
3. FAILURE TO OBTAIN REQUIRED INSPECTIONS MAY ENDANGER OR DELAY PROJECT APPROVAL.
4. ALL WORK IN THE PUBLIC RIGHT-OF-WAY REQUIRES A GENERAL RIGHT-OF-WAY PERMIT FROM PIERCE COUNTY PLANNING AND PUBLIC WORKS.

SCHEDULE B DRAWING SHEETS

SHEET	#	DESCRIPTION
		WWTF & DRAIN FIELD
B-D1.0	130	WWTF DEMO AND TESC PLAN
B-D1.1	131	DRAIN FIELD DEMO AND TESC PLAN
B-D2.0	132	DEMO AND TESC DETAILS
B-D2.1	133	DEMO AND TESC DETAILS & NOTES
B-C1.0	134	SITE PLAN - DRAIN FIELD TRAIL
B-C2.0	135	SITE DETAILS
B-C3.0	136	GRADING PLAN - DRAIN FIELD TRAIL
B-C4.0	137	FENCE & GATE PLAN - WWTF
B-C4.1	138	FENCE & GATE PLAN - DRAIN FIELD
B-C5.0	139	GATE LAYOUT - WWTF
B-C5.1	140	FENCE & GATE DETAILS - WWTF
B-L1.0	141	RESTORATION PLAN - WWTF
B-L1.1	142	RESTORATION PLAN - DRAIN FIELD
B-L2.0	143	RESTORATION PLANTING DETAILS
		WASTE WATER TREATMENT FACILITY
B-G2.0	144	DRAWING INDEX AND DESIGN TEAM
B-G3.0	145	LEGEND, ABBREVIATIONS, AND NOTES
B-P1.0	146	MBR SYSTEM DESIGN DATA
B-P1.1	147	P&ID DIAGRAM LEGEND & ABBREVIATIONS
B-P2.0	148	INFLUENT PUMP STATION P&ID
B-P2.1	149	MBR FEED PUMP STATION P&ID
B-P3.0	150	MBR SYSTEM PROCESS FLOW DIAGRAM
B-P4.0	151	MBR SYSTEM HYDRAULIC PROFILE
B-C1.0	152	OVERALL SITE PLAN
B-C1.1	153	DRAINFIELD SITE PLAN
B-C1.2	154	EFFLUENT FORCE MAIN PLAN AND PROFILE
B-C1.3	155	EFFLUENT FORCE MAIN PLAN AND PROFILE
B-C1.4	156	DRAINFIELD SECTION AND DETAILS
B-C1.5	157	TRENCH DETAILS
B-C2.0	158	WWTF SITE UTILITY PLAN
B-C3.0	159	WWTF SITE GRADING PLAN
B-C4.0	160	CIVIL DETAILS
B-C4.1	161	CIVIL DETAILS
B-C5.0	162	EQUALIZATION TANK PLAN AND SECTIONS
B-S1.0	163	GENERAL STRUCTURAL NOTES AND ABBREVIATIONS
B-S1.1	164	GENERAL STRUCTURAL NOTES
B-S2.0	165	STRUCTURAL DETAILS
B-S3.0	166	BUILDING FLOOR & FOUNDATION PLAN AND SECTIONS
B-S3.1	167	BUILDING ROOF & FRAME PLANS, SECTIONS, AND DETAILS
B-S3.2	168	BUILDING SECTIONS AND ELEVATIONS
B-S3.3	169	BUILDING SECTIONS AND DETAILS
B-S4.0	170	TANK PLAN, SECTIONS, AND DETAILS
B-S4.1	171	MBR TANK COVER PLANS AND DETAILS
B-S5.0	172	EQUIPMENT FOUNDATIONS
B-M1.0	173	MECH PIPING SYMBOLS, NOTES AND ABBREVIATIONS
B-M2.0	174	INFLUENT PUMP STATION PLAN AND SECTION
B-M2.1	175	MBR FEED PUMP STATION PLAN AND SECTION
B-M2.2	176	INFLUENT SCREEN PLAN AND SECTION
B-M3.0	177	OPERATIONS BUILDING INTERNAL PIPING PLAN
B-M3.1	178	OPERATIONS BUILDING INTERNAL PIPING SECTION AND DETAILS
B-M3.2	179	MBR SYSTEM TANK PLAN
B-M3.3	180	MBR TANK INTERNAL PIPING SECTION
B-M3.4	181	MBR SYSTEM PIPING SECTIONS
B-M3.5	182	MECHANICAL PIPING DETAILS
B-M3.6	183	PLANT EFFLUENT STORAGE TANK DETAILS
B-M4.0	184	HVAC FLOOR PLANS AND SECTION
B-M4.1	185	OPERATIONS BUILDING PLUMBING PLAN
B-M4.2	186	OPERATIONS BUILDING PLUMBING SECTIONS & DETAILS
B-M5.0	187	MBR ODOR CONTROL TREATMENT SYSTEM PLAN AND SECTION
B-M5.1	188	MBR ODOR CONTROL PIPING DETAILS
B-E1.0	189	ELECTRICAL SYMBOLS, NOTES AND ABBREVIATIONS
B-E2.0	190	ELECTRICAL DETAILS
B-E3.0	191	ELECTRICAL SITE PLAN
B-E4.0	192	BUILDING ELECTRICAL PLAN
B-E4.1	193	MECH / STORAGE ELECTRICAL PLAN
B-E5.0	194	MBR TANK ELECTRICAL PLAN
B-E5.1	195	INFLUENT PUMP AND SCREEN ELECTRICAL PLAN
B-E5.2	196	MBR FEED PUMP STATION ELECTRICAL PLAN
B-E6.0	197	ELECTRICAL ONE-LINE DIAGRAM
B-E6.1	198	ELECTRICAL PANELBOARD AND LIGHTING SCHEDULES
B-E6.2	199	ELECTRICAL CONDUIT AND CABLE SCHEDULE
B-E7.0	200	MOTOR CONTROL ELEMENTARIES 1
B-E7.1	201	MOTOR CONTROL ELEMENTARIES 2
B-E7.2	202	MOTOR CONTROL ELEMENTARIES 3
B-E7.3	203	MOTOR CONTROL ELEMENTARIES 4
B-E7.4	204	MOTOR CONTROL ELEMENTARIES 5
B-I1.0	205	SCADA BLOCK DIAGRAM
		ARCHITECTURE
GI-201	206	WWTF - GENERAL CODE INFORMATION
GI-301	207	WWTF - AIR BARRIER
A-101	208	WWTF - OVERALL FLOOR PLAN - LEVEL 1
A-102	209	WWTF - OVERALL FLOOR PLAN - LEVEL 2
A-151	210	WWTF - REFERENCE REFLECTED CEILING PLAN
A-161	211	WWTF - REFERENCE ROOF PLAN
A-201	212	WWTF - EXTERIOR ELEVATIONS
A-251	213	WWTF - INTERIOR ELEVATIONS
A-301	214	WWTF - BUILDING SECTIONS
A-302	215	WWTF - VERTICAL CIRCULATION
A-501	216	WWTF - WALL, FLOOR, AND ROOF TYPES
A-511	217	WWTF - FOUNDATION DETAILS
A-521	218	WWTF - EXTERIOR WALL DETAILS
A-541	219	WWTF - DOOR, FRAME & WINDOW DETAILS
A-542	220	WWTF - WINDOW DETAILS
A-561	221	WWTF - CEILING DETAILS
A-571	222	WWTF - ROOF DETAILS
A-572	223	WWTF - ROOF DETAILS
A-585	224	WWTF - MISCELLANEOUS DETAILS
A-601	225	WWTF - DOOR & FRAME SCHEDULE
A-621	226	WWTF - FINISH SCHEDULE

SITE SHEET KEY

BID SCHEDULE B DESIGNATOR → B-X#.#

SHEET REFERENCE

BID SET

Call 811 two business days before you dig

CAD NO.

NO.	REVISIONS	INT.	APP.	DATE

ACTION	BY	DATE
DESIGNED		
DRAWN		
CHECKED (FIELD)		
CHECKED (HDQTS.)		

STATE OF WASHINGTON · JONAH HAYES · No. 24012362 Exp. 05/18/2026 · LICENSED LANDSCAPE ARCHITECT

REGISTERED STAMP

WASHINGTON STATE PARKS AND RECREATION COMMISSION

NISQUALLY STATE PARK

PHASE 3A MAINTENANCE BUILDING AND WWTF

SHEET LIST

G1.3

SCALE

PARKS FILE#

G:\2018\180620 New Full Service Park Design Services\Drawings\Sheets\Phase 3\1-General Sheets\G1.2 Sheet List - BID SET 1.dwg
May-05-25 4:25pm

PRIVATE IMPROVEMENTS

1001191
PERMIT #

01-05-2023
DATE

DEVELOPMENT ENGINEER

PIERCE COUNTY ORDINANCE NUMBER 2021-45

1. CONTACT Dennis Peterson THE AREA INSPECTOR, AT 253-798- 2539 TO COORDINATE THE PRE-CONSTRUCTION MEETING AND COUNTY INSPECTIONS. PRE-CONSTRUCTION MEETING SHALL BE REQUESTED AT LEAST 48-HOURS IN ADVANCE OF THE START OF CONSTRUCTION.
2. APPOINT A CERTIFIED EROSION AND SEDIMENT CONTROL LEAD WHO SHALL BE PROVIDED A COPY OF THE SWPPP, EROSION CONTROL PLAN & INSPECTION SCHEDULE.
3. FAILURE TO OBTAIN REQUIRED INSPECTIONS MAY ENDANGER OR DELAY PROJECT APPROVAL.
4. ALL WORK IN THE PUBLIC RIGHT-OF-WAY REQUIRES A GENERAL RIGHT-OF-WAY PERMIT FROM PIERCE COUNTY PLANNING AND PUBLIC WORKS.

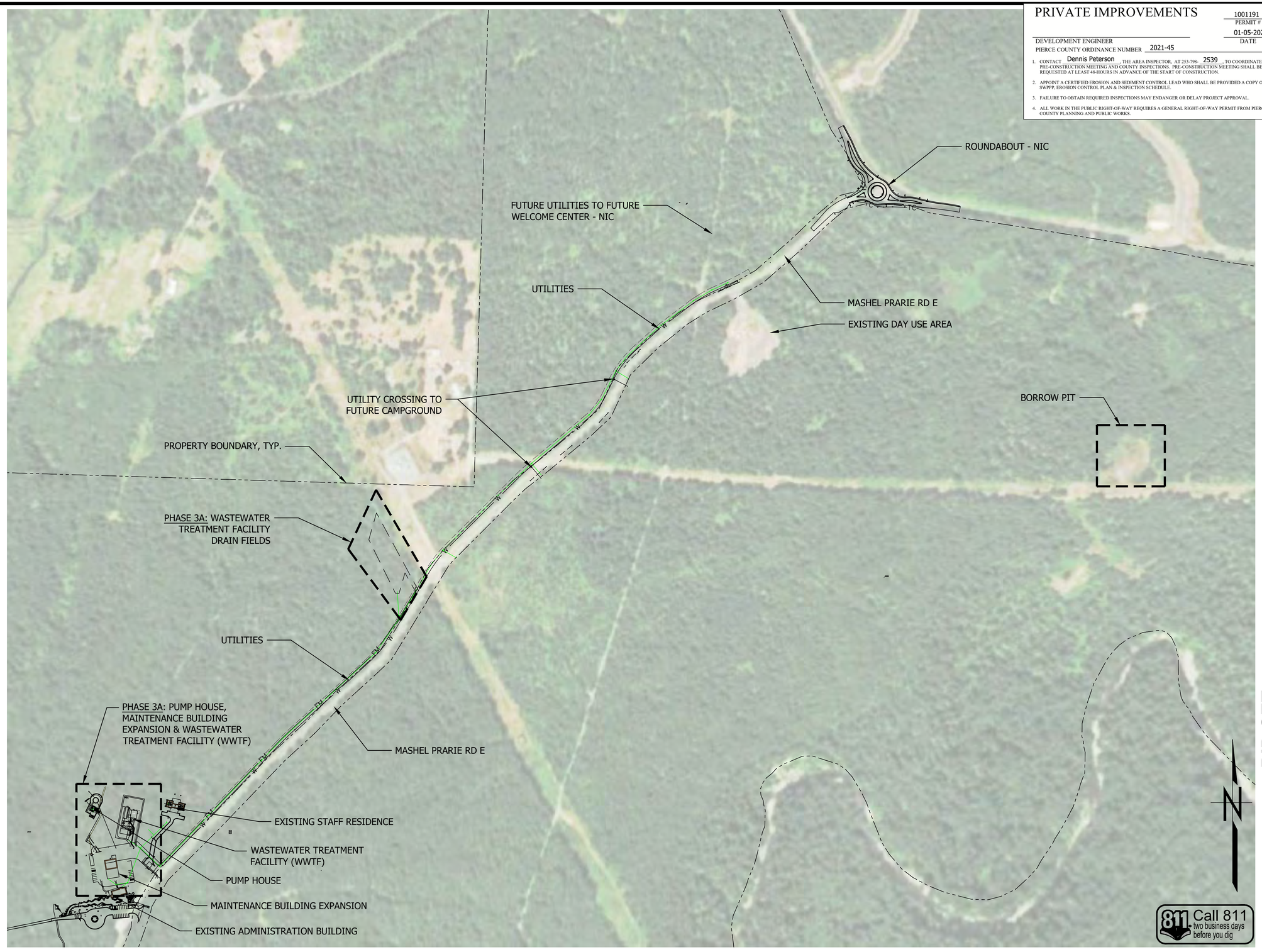

BID SET

SHEET 5 OF 226

CAD NO.

NO.	REVISIONS	INT.	APP.	DATE

ACTION	BY	DATE
DESIGNED		
DRAWN		
CHECKED (FIELD)		
CHECKED (HDQTS.)		

STATE OF WASHINGTON
JONAH HAYES
No. 24012982 Exp. 06/16/2023
LICENSED LANDSCAPE ARCHITECT

REGISTERED STAMP

WASHINGTON STATE PARKS AND RECREATION COMMISSION

NISQUALLY STATE PARK

PHASE 3A MAINTENANCE BUILDING AND WWTF

KEY MAP

G2.0

SCALE
0 250' 500'

PARKS FILE#

O:\2018\18062A New Full Service Park Design Services\Drawings\Sheets\Phase 3\1-General Sheets\G2.0 Key Map 3A.dwg
Jan-08-25 9:33am

CONCURRENT WORK NOTICE

1. CONTRACTOR IS INFORMED THAT ELEMENTS OF PHASE 3A CONSTRUCTION WILL BE COMPLETED CONCURRENT TO OTHER PHASE 3 WORK, PHASE 2 AND LANDFILL CLEANUP.
2. PHASE 3A WASTE WATER TREATMENT FACILITY, PUMP HOUSE AND MAINTENANCE BUILDING CONSTRUCTION SHARE CONSTRUCTION ACCESS WITH THE PHASE 2 STAFF RESIDENCE WORK. CONTRACTOR IS INFORMED OF SHARED ACCESS AND SHALL COORDINATE ANY LIMITATIONS OR BLOCKING OF SHARED ACCESS WITH OWNERS REPRESENTATIVE AND PHASE 2 AND 3 CONTRACTORS.
3. CONTRACTOR IS INFORMED THAT THE PHASE 3C ROUNDABOUT WILL BE CONSTRUCTED CONCURRENT TO OTHER PHASE 3 CONSTRUCTION, AND COULD CAUSE TRAFFIC DELAYS.
4. CONTRACTOR IS INFORMED THAT PHASE 3A UTILITY WORK ALONG AND CROSSING MASHEL PRARIE ROAD WILL BE CONSTRUCTED CONCURRENT TO OTHER PHASE 3 CONSTRUCTION AND COULD CAUSE TRAFFIC DELAYS.
5. CONTRACTOR IS INFORMED THAT ACCESS TO THE BORROW PIT WILL NOT BE PROVIDED UNTIL AFTER 10/1/2025. TRAFFIC TO BORROW PIT TO BE COORDINATED WITH LANDFILL CLEANUP CONTRACTOR.

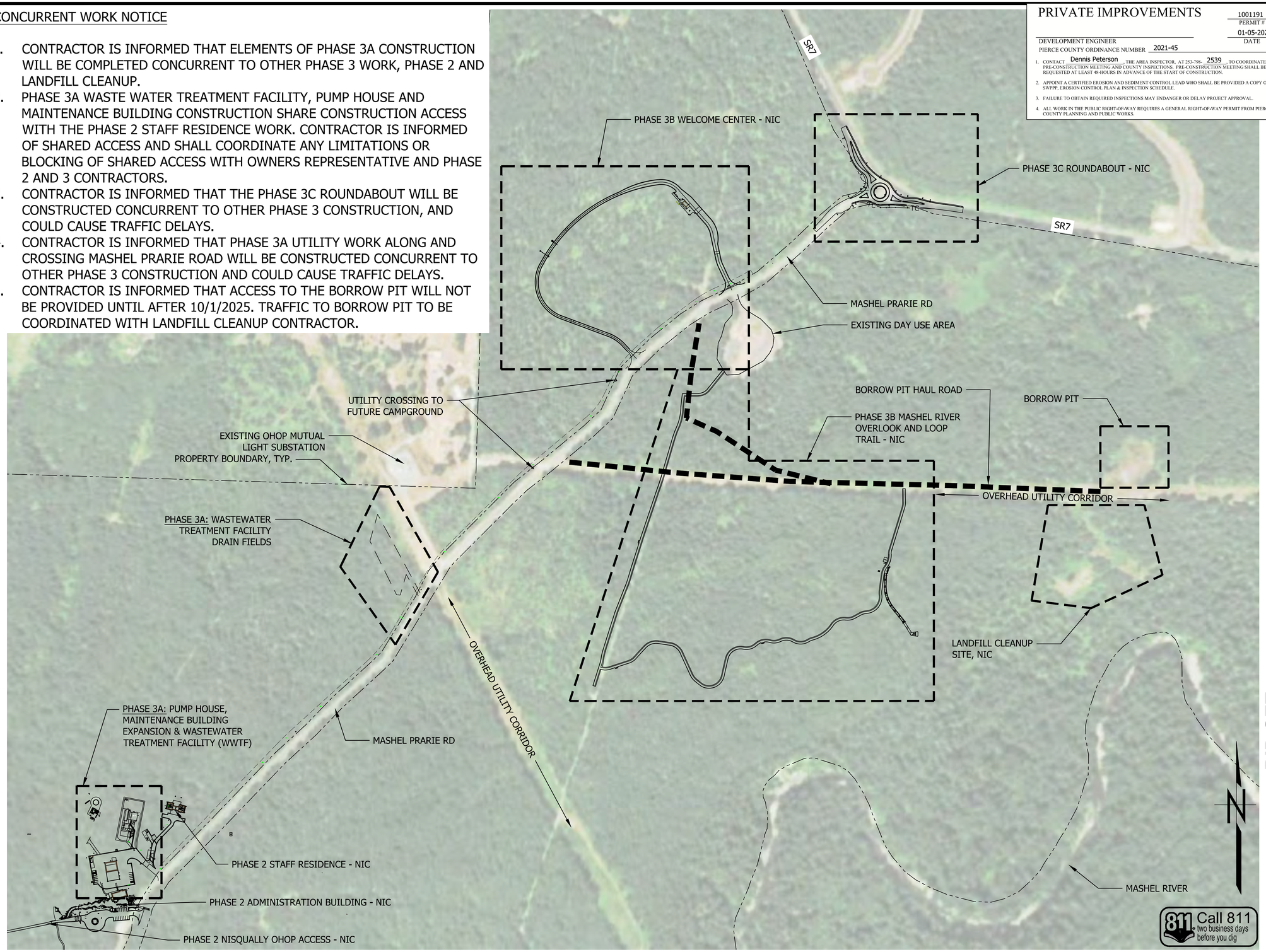

BID SET

SHEET 6 OF 226

PRIVATE IMPROVEMENTS

1001191
PERMIT #

01-05-2023
DATE

DEVELOPMENT ENGINEER

PIERCE COUNTY ORDINANCE NUMBER 2021-45

1. CONTACT Dennis Peterson THE AREA INSPECTOR, AT 253-798- 2539 TO COORDINATE THE PRE-CONSTRUCTION MEETING AND COUNTY INSPECTIONS. PRE-CONSTRUCTION MEETING SHALL BE REQUESTED AT LEAST 48-HOURS IN ADVANCE OF THE START OF CONSTRUCTION.
2. APPOINT A CERTIFIED EROSION AND SEDIMENT CONTROL LEAD WHO SHALL BE PROVIDED A COPY OF THE SWPPP, EROSION CONTROL PLAN & INSPECTION SCHEDULE.
3. FAILURE TO OBTAIN REQUIRED INSPECTIONS MAY ENDANGER OR DELAY PROJECT APPROVAL.
4. ALL WORK IN THE PUBLIC RIGHT-OF-WAY REQUIRES A GENERAL RIGHT-OF-WAY PERMIT FROM PIERCE COUNTY PLANNING AND PUBLIC WORKS.

CAD NO.

NO.	REVISIONS	INT.	APP.	DATE

ACTION	BY	DATE
DESIGNED		
DRAWN		
CHECKED (FIELD)		
CHECKED (HDQTS.)		

STATE OF WASHINGTON · JONAH HAYES · No. 24012362 EXP. 05/16/2026 · LICENSED LANDSCAPE ARCHITECT

REGISTERED STAMP

WASHINGTON STATE PARKS AND RECREATION COMMISSION

NISQUALLY STATE PARK

PHASE 3A MAINTENANCE BUILDING AND WWTF

NOTICE OF CONCURRENT WORK

G2.1

SCALE 250' 0 500'

PARKS FILE#

G:\2018\18062A New Full Service Park Design Services\Drawings\Sheets\Phase 3\1-General Sheets\G2.0 Key Map 3A.dwg
May-05-25 4:16pm

PRIVATE IMPROVEMENTS

1001191
PERMIT #

01-05-2023
DATE

DEVELOPMENT ENGINEER

PIERCE COUNTY ORDINANCE NUMBER 2021-45

1. CONTACT Dennis Peterson THE AREA INSPECTOR, AT 253-798- 2539 TO COORDINATE THE PRE-CONSTRUCTION MEETING AND COUNTY INSPECTIONS. PRE-CONSTRUCTION MEETING SHALL BE REQUESTED AT LEAST 48-HOURS IN ADVANCE OF THE START OF CONSTRUCTION.
2. APPOINT A CERTIFIED EROSION AND SEDIMENT CONTROL LEAD WHO SHALL BE PROVIDED A COPY OF THE SWPPP, EROSION CONTROL PLAN & INSPECTION SCHEDULE.
3. FAILURE TO OBTAIN REQUIRED INSPECTIONS MAY ENDANGER OR DELAY PROJECT APPROVAL.
4. ALL WORK IN THE PUBLIC RIGHT-OF-WAY REQUIRES A GENERAL RIGHT-OF-WAY PERMIT FROM PIERCE COUNTY PLANNING AND PUBLIC WORKS.

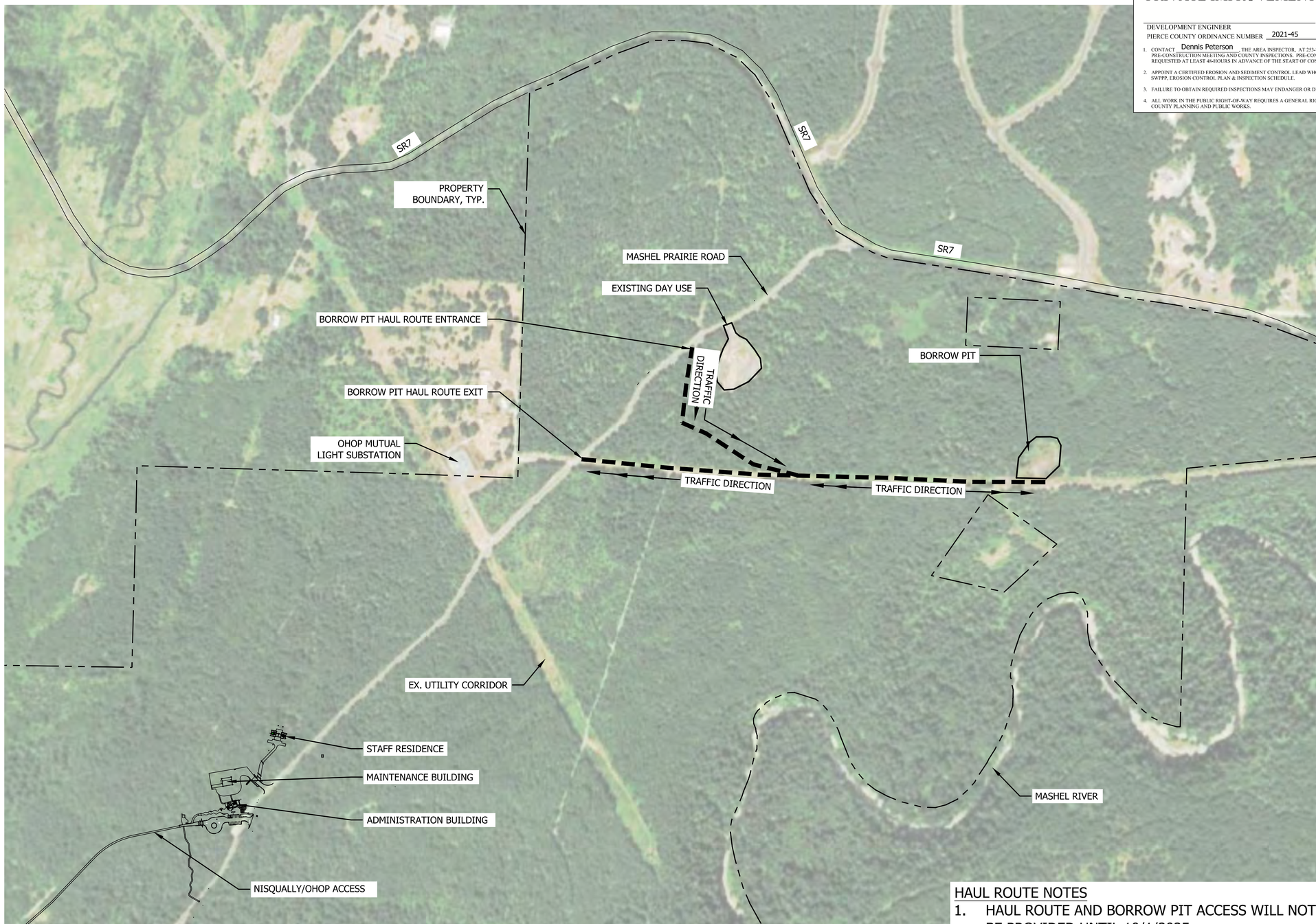

HAUL ROUTE NOTES

1. HAUL ROUTE AND BORROW PIT ACCESS WILL NOT BE PROVIDED UNTIL 10/1/2025.
2. NOTIFICATION OF HAUL ROUTE USE SHALL BE GIVEN TO OWNER AND LANDFILL CLEANUP CONTRACTOR.

BID SET

SHEET 7 OF 226

CAD NO.

NO.	REVISIONS	INT.	APP.	DATE

ACTION	BY	DATE
DESIGNED		
DRAWN		
CHECKED (FIELD)		
CHECKED (HDQTS.)		

STATE OF WASHINGTON
JONAH HAYES
No. 24012382 EXP. 05/18/2026
LICENSED LANDSCAPE ARCHITECT

REGISTERED STAMP

WASHINGTON STATE PARKS AND RECREATION COMMISSION

NISQUALLY STATE PARK

PHASE 3A MAINTENANCE BUILDING AND WWTF

BORROW PIT HAUL ROUTE

G3.0

SCALE
NOT TO SCALE

PARKS FILE#

PRIVATE IMPROVEMENTS

1001191	PERMIT #
01-05-2023	DATE

DEVELOPMENT ENGINEER

PIERCE COUNTY ORDINANCE NUMBER 2021-45

1. CONTACT Dennis Peterson THE AREA INSPECTOR, AT 253-798- 2539 TO COORDINATE THE PRE-CONSTRUCTION MEETING AND COUNTY INSPECTIONS. PRE-CONSTRUCTION MEETING SHALL BE REQUESTED AT LEAST 48-HOURS IN ADVANCE OF THE START OF CONSTRUCTION.
2. APPOINT A CERTIFIED EROSION AND SEDIMENT CONTROL LEAD WHO SHALL BE PROVIDED A COPY OF THE SWPPP, EROSION CONTROL PLAN & INSPECTION SCHEDULE.
3. FAILURE TO OBTAIN REQUIRED INSPECTIONS MAY ENDANGER OR DELAY PROJECT APPROVAL.
4. ALL WORK IN THE PUBLIC RIGHT-OF-WAY REQUIRES A GENERAL RIGHT-OF-WAY PERMIT FROM PIERCE COUNTY PLANNING AND PUBLIC WORKS.

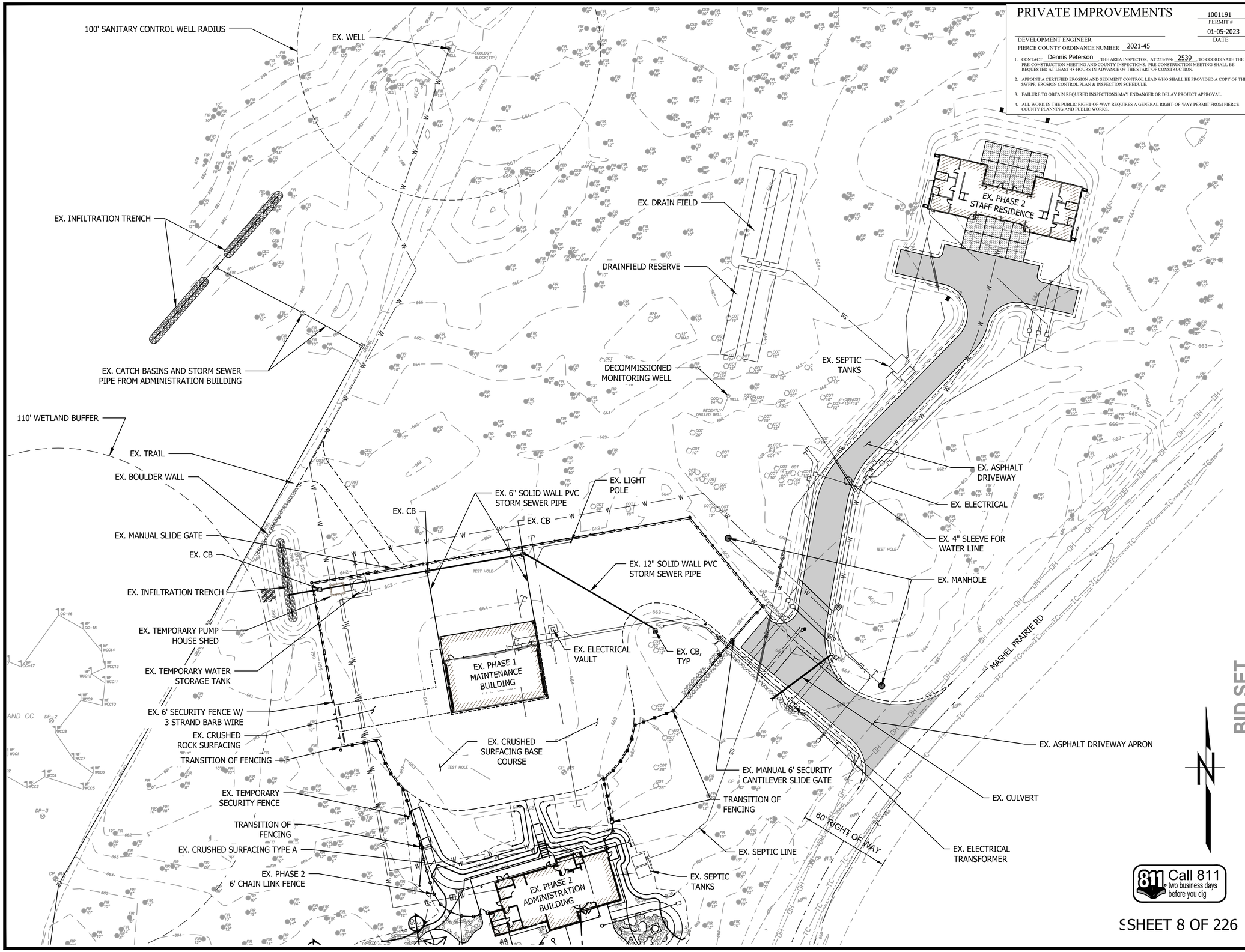

SSHEET 8 OF 226

BID SET

CAD NO.

NO.	REVISIONS	INT.	APP.	DATE

ACTION	BY	DATE
DESIGNED		
DRAWN		
CHECKED (FIELD)		
CHECKED (HDQTS.)		

STATE OF WASHINGTON · JONAH HAYES · No. 24012362 EXP. 09/18/2026 · LICENSED LANDSCAPE ARCHITECT

REGISTERED STAMP

WASHINGTON STATE PARKS AND RECREATION COMMISSION

NISQUALLY STATE PARK

PHASE 3A MAINTENANCE BUILDING AND WWTF

EXISTING CONDITIONS

A-D1.0

SCALE 30' 0 60'

PARKS FILE#

O:\2018\18062A New Full Service Park Design Services\Drawings\Sheets\Phase 3\Bid Set 1 Maint, Pump, WWTF, Utility\D1.0 Existing Conditions.dwg
Jan-06-25 5:02pm

PRIVATE IMPROVEMENTS

1001191
PERMIT #

01-05-2023
DATE

DEVELOPMENT ENGINEER

PIERCE COUNTY ORDINANCE NUMBER 2021-45

1. CONTACT Dennis Peterson THE AREA INSPECTOR, AT 253-798- 2539 TO COORDINATE THE PRE-CONSTRUCTION MEETING AND COUNTY INSPECTIONS. PRE-CONSTRUCTION MEETING SHALL BE REQUESTED AT LEAST 48-HOURS IN ADVANCE OF THE START OF CONSTRUCTION.
2. APPOINT A CERTIFIED EROSION AND SEDIMENT CONTROL LEAD WHO SHALL BE PROVIDED A COPY OF THE SWPPP, EROSION CONTROL PLAN & INSPECTION SCHEDULE.
3. FAILURE TO OBTAIN REQUIRED INSPECTIONS MAY ENDANGER OR DELAY PROJECT APPROVAL.
4. ALL WORK IN THE PUBLIC RIGHT-OF-WAY REQUIRES A GENERAL RIGHT-OF-WAY PERMIT FROM PIERCE COUNTY PLANNING AND PUBLIC WORKS.

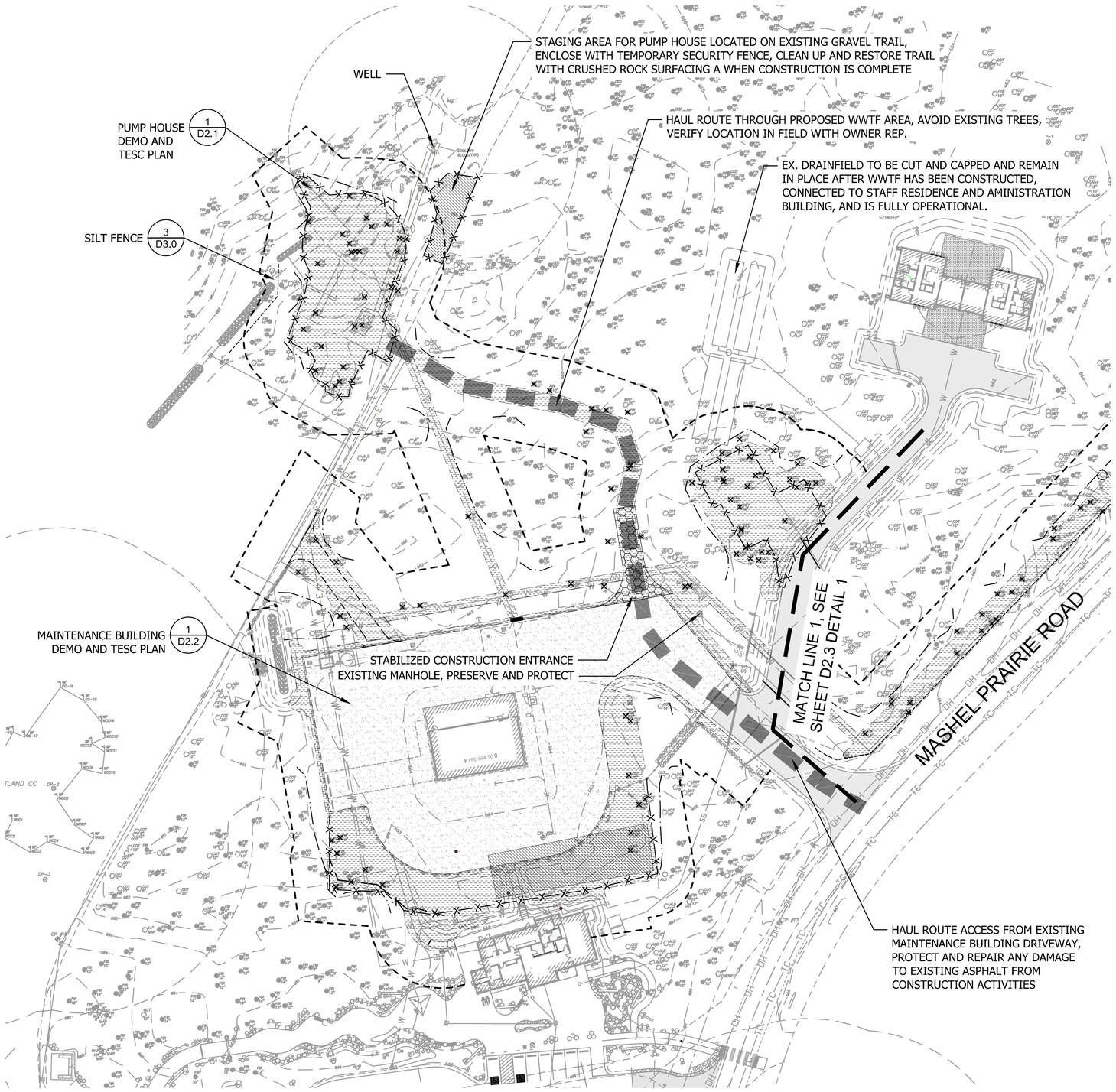

DEMO LEGEND:

- CLEAR & GRUB ALL VEGETATION FROM AREA TO 6" DEPTH MINIMUM OR TO MINERAL SOIL SUB BASE AND DISPOSE OF OFF SITE LEGALLY (37,450 +/- SF)
- CONSTRUCTION STAGING AREA ENCLOSED WITH TEMPORARY SECURITY FENCE CONFIRM LOCATION AND DIMENSIONS WITH OWNER BEFORE CONSTRUCTION BEGINS
- SALVAGE AND REUSE EXISTING CRUSHED ROCK SURFACING FOR PAVEMENT BASE
- STABILIZED CONSTRUCTION ENTRANCE 1/D2.1
- REMOVE EXISTING TREES WITH ROOTWAD. DISPOSE ROOTWAD OFFSITE, TREES TO BE CHIPPED, WOOD CHIPS TO BE STOCKPILED ON SITE FOR RESTORATION. (90 +/- TREES)
- NATIVE UNDISTURBED VEGETATION BUFFER, PER BMP C234
- TEMPORARY SECURITY FENCING 1/D3.0
- TREE PROTECTION FENCE 2/D3.0
- SILT FENCE 3/D3.0

KEYMAP (NTS)

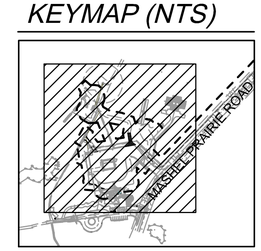

Call 811 two business days before you dig

SHEET 9 OF 226

BID SET

CAD NO.

NO.	REVISIONS	INT.	APP.	DATE

ACTION	BY	DATE
DESIGNED		
DRAWN		
CHECKED (FIELD)		
CHECKED (HDQTS.)		

STATE OF WASHINGTON
JONAH HAYES
No. 24012382 EXP. 05/18/2026
LICENSED LANDSCAPE ARCHITECT

REGISTERED STAMP

WASHINGTON STATE PARKS AND RECREATION COMMISSION

NISQUALLY STATE PARK

PHASE 3A MAINTENANCE BUILDING AND WWTF OVERALL DEMO AND TESC PLAN

A-D2.0

SCALE 30' 0 60'

PARKS FILE#

O:\2018\18052A New Full Service Park Design Services\Drawings\Sheets\Phase 3\Bid Set 1 Maint, Pump, WWTF, Utility\Schedule A\A-D2.0-2.2 Demo TESC Plan.dwg
Apr-08-23 3:19pm

NOTES:

1. QUANTITIES PROVIDED FOR CONTRACTOR INFORMATION ONLY. CONTRACTOR TO DERIVE THEIR OWN QUANTITIES.
2. BOULDERS DISCOVERED DURING GRUBBING AND EXCAVATION THAT ARE LARGER THAN 1' DIA. ARE TO BE SALVAGED AND STOCKPILED ON SITE FOR LATER USE. SMALLER BOULDERS ARE TO BE DISPOSED OF OFF SITE LEGALLY
3. ANY DAMAGE SHALL BE REPAIRED IMMEDIATELY.
4. STAGING AREA LOCATED WITHIN LIMIT OF WORK.

DEMO LEGEND:

- CLEAR & GRUB ALL VEGETATION FROM AREA TO 6" DEPTH MINIMUM OR TO MINERAL SOIL SUB BASE AND DISPOSE OF OFF SITE LEGALLY (23,430 +/- SF)
- CONSTRUCTION STAGING AREA ENCLOSED WITH TEMPORARY SECURITY FENCE CONFIRM LOCATION AND DIMENSIONS WITH OWNER BEFORE CONSTRUCTION BEGINS
- SALVAGE AND REUSE EXISTING CRUSHED ROCK SURFACING FOR PAVEMENT BASE
- STABILIZED CONSTRUCTION ENTRANCE 1/D2.1
- × REMOVE EXISTING TREES WITH ROOTWAD. DISPOSE ROOTWAD OFFSITE, TREES TO BE CHIPPED, WOOD CHIPS TO BE STOCKPILED ON SITE FOR RESTORATION. (56 +/- TREES)
- NATIVE UNDISTURBED VEGETATION BUFFER, PER BMP C234
- —X—X— TEMPORARY SECURITY FENCING 1/D3.0
- —·—·— TREE PROTECTION FENCE 2/D3.0
- ---------- SILT FENCE 3/D3.0

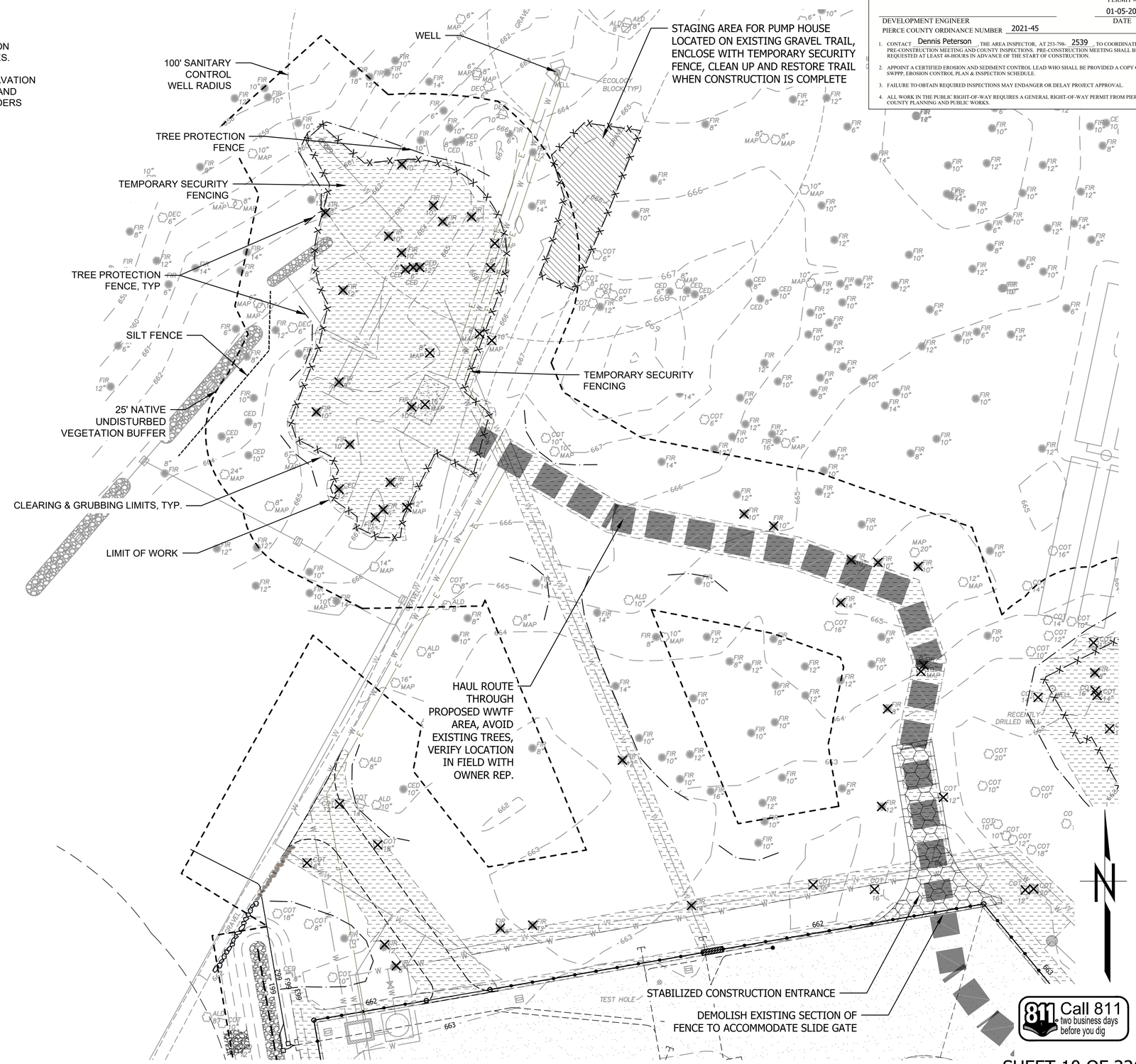

KEYMAP (NTS)

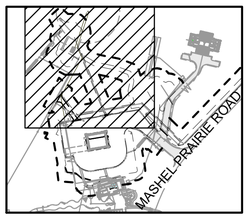

Call 811 two business days before you dig

BID SET

SHEET 10 OF 226

PRIVATE IMPROVEMENTS

1001191	PERMIT #
01-05-2023	DATE

DEVELOPMENT ENGINEER

PIERCE COUNTY ORDINANCE NUMBER 2021-45

1. CONTACT Dennis Peterson THE AREA INSPECTOR, AT 253-798- 2539 TO COORDINATE THE PRE-CONSTRUCTION MEETING AND COUNTY INSPECTIONS. PRE-CONSTRUCTION MEETING SHALL BE REQUESTED AT LEAST 48-HOURS IN ADVANCE OF THE START OF CONSTRUCTION.
2. APPOINT A CERTIFIED EROSION AND SEDIMENT CONTROL LEAD WHO SHALL BE PROVIDED A COPY OF THE SWPPP, EROSION CONTROL PLAN & INSPECTION SCHEDULE.
3. FAILURE TO OBTAIN REQUIRED INSPECTIONS MAY ENDANGER OR DELAY PROJECT APPROVAL.
4. ALL WORK IN THE PUBLIC RIGHT-OF-WAY REQUIRES A GENERAL RIGHT-OF-WAY PERMIT FROM PIERCE COUNTY PLANNING AND PUBLIC WORKS.

CAD NO.

NO.	REVISIONS	INT.	APP.	DATE

ACTION	BY	DATE
DESIGNED		
DRAWN		
CHECKED (FIELD)		
CHECKED (HDQTS.)		

STATE OF WASHINGTON · JONAH HAYES · No. 24012362 Exp. 05/16/2026 · LICENSED LANDSCAPE ARCHITECT

REGISTERED STAMP

WASHINGTON STATE PARKS AND RECREATION COMMISSION

NISQUALLY STATE PARK

PHASE 3A MAINTENANCE BUILDING AND WWTF

PUMP HOUSE DEMO AND TESC PLAN A-D2.1

SCALE 0 20' 40'

PARKS FILE#

O:\2018\18062a new full service park design services\Drawings\Sheets\Phase 3\bid set 1 maint, pump, wwtf, utility\Schedule A\A-D2.0-2.2 Demo TESC Plan.dwg
May-06-25 3:09pm

DEMO LEGEND:

- CLEAR & GRUB ALL VEGETATION FROM AREA TO 6" DEPTH MINIMUM OR TO MINERAL SOIL SUB BASE AND DISPOSE OF OFF SITE LEGALLY (28,230 +/- SF)
- CONSTRUCTION STAGING AREA ENCLOSED WITH TEMPORARY SECURITY FENCE CONFIRM LOCATION AND DIMENSIONS WITH OWNER BEFORE CONSTRUCTION BEGINS
- SALVAGE AND REUSE EXISTING CRUSHED ROCK SURFACING FOR PAVEMENT BASE
- STABILIZED CONSTRUCTION ENTRANCE 1/D3.1
- REMOVE EXISTING TREES WITH ROOTWAD. DISPOSE ROOTWAD OFFSITE, TREES TO BE CHIPPED, WOOD CHIPS TO BE STOCKPILED ON SITE FOR RESTORATION. (62 +/- TREES)
- NATIVE UNDISTURBED VEGETATION BUFFER, PER BMP C234
- TEMPORARY SECURITY FENCING 1/D3.0
- TREE PROTECTION FENCE 2/D3.0
- SILT FENCE 3/D3.0

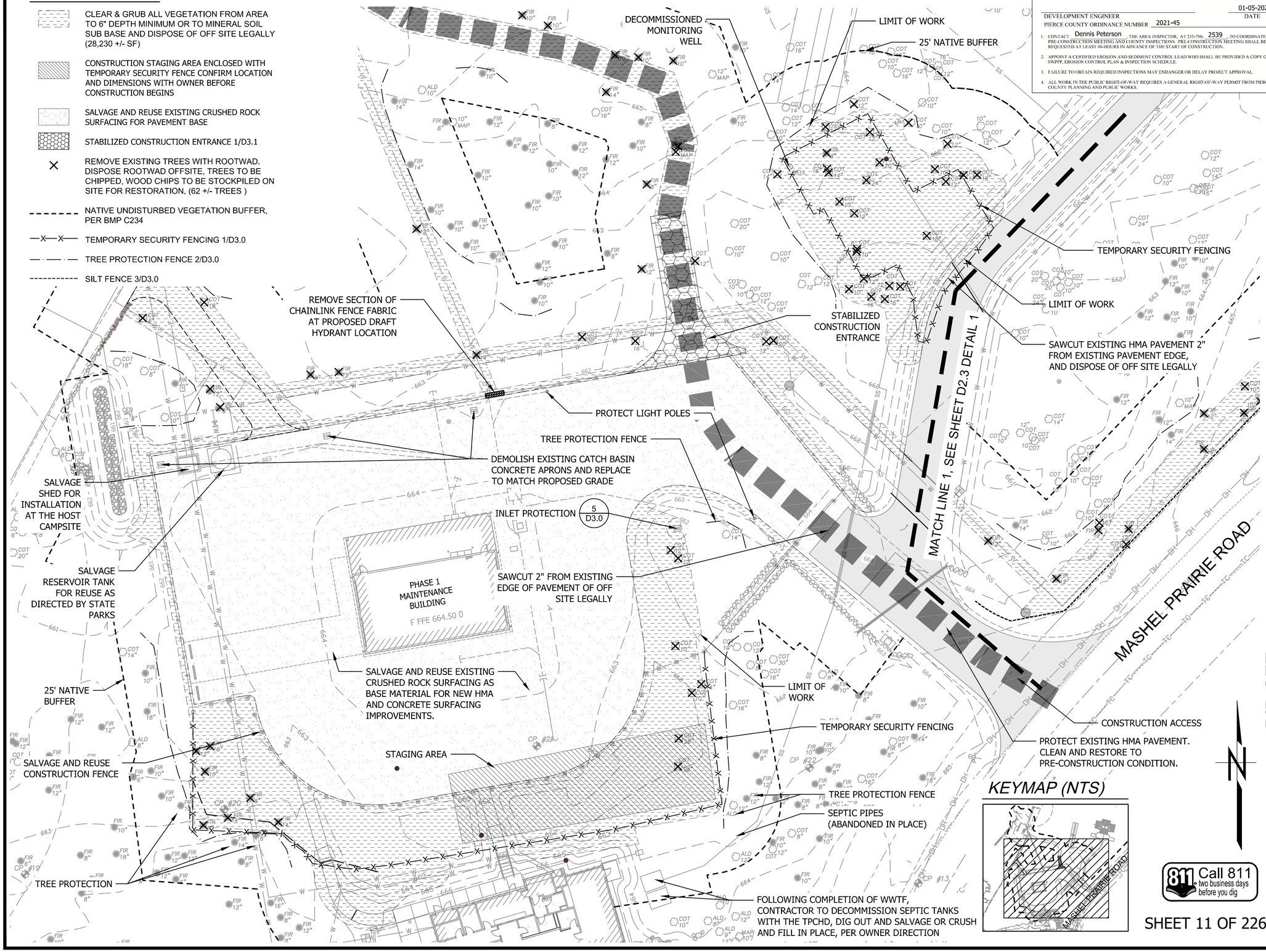

PRIVATE IMPROVEMENTS

1001191	PERMIT #
01-05-2023	DATE

DEVELOPMENT ENGINEER

PIERCE COUNTY ORDINANCE NUMBER 2021-45

1. CONTACT Dennis Peterson THE AREA INSPECTOR, AT 253-798- 2539 TO COORDINATE THE PRE-CONSTRUCTION MEETING AND COUNTY INSPECTIONS. PRE-CONSTRUCTION MEETING SHALL BE REQUESTED AT LEAST 48-HOURS IN ADVANCE OF THE START OF CONSTRUCTION.
2. APPOINT A CERTIFIED EROSION AND SEDIMENT CONTROL LEAD WHO SHALL BE PROVIDED A COPY OF THE SWPPP, EROSION CONTROL PLAN & INSPECTION SCHEDULE.
3. FAILURE TO OBTAIN REQUIRED INSPECTIONS MAY ENDANGER OR DELAY PROJECT APPROVAL.
4. ALL WORK IN THE PUBLIC RIGHT-OF-WAY REQUIRES A GENERAL RIGHT-OF-WAY PERMIT FROM PIERCE COUNTY PLANNING AND PUBLIC WORKS.

CAD NO.

NO.	REVISIONS	INT.	APP.	DATE

ACTION	BY	DATE
DESIGNED		
DRAWN		
CHECKED (FIELD)		
CHECKED (HDQTS.)		

STATE OF WASHINGTON JONAH HAYES No. 20172362 EXP. 09/16/2026 LICENSED LANDSCAPE ARCHITECT

REGISTERED STAMP

WASHINGTON STATE PARKS AND RECREATION COMMISSION

NISQUALLY STATE PARK

PHASE 3A MAINTENANCE BUILDING AND WWTF

MAINT. BLD. DEMO AND TESC PLAN D2.2

SCALE 20' 0 40'

PARKS FILE#

SHEET 11 OF 226

O:\2018\18062A New Full Service Park Design Services\Drawings\Sheets\Phase 3\Bid Set 1 Maint, Pump, WWTF, Utility\Schedule A\A-D2.0-2.2 Demo TESC Plan.dwg
Apr-08-23 3:21pm

PRIVATE IMPROVEMENTS

1001191
PERMIT #

01-05-2023
DATE

DEVELOPMENT ENGINEER

PIERCE COUNTY ORDINANCE NUMBER 2021-45

1. CONTACT Dennis Peterson THE AREA INSPECTOR, AT 253-798- 2539 TO COORDINATE THE PRE-CONSTRUCTION MEETING AND COUNTY INSPECTIONS. PRE-CONSTRUCTION MEETING SHALL BE REQUESTED AT LEAST 48-HOURS IN ADVANCE OF THE START OF CONSTRUCTION.
2. APPOINT A CERTIFIED EROSION AND SEDIMENT CONTROL LEAD WHO SHALL BE PROVIDED A COPY OF THE SWPPP, EROSION CONTROL PLAN & INSPECTION SCHEDULE.
3. FAILURE TO OBTAIN REQUIRED INSPECTIONS MAY ENDANGER OR DELAY PROJECT APPROVAL.
4. ALL WORK IN THE PUBLIC RIGHT-OF-WAY REQUIRES A GENERAL RIGHT-OF-WAY PERMIT FROM PIERCE COUNTY PLANNING AND PUBLIC WORKS.

DEMO LEGEND:

- CLEAR & GRUB ALL VEGETATION FROM AREA TO 6" DEPTH MINIMUM OR TO MINERAL SOIL SUB BASE AND DISPOSE OF OFF SITE LEGALLY (31,040 +/- SF)
- CONSTRUCTION STAGING AREA ENCLOSED WITH TEMPORARY SECURITY FENCE CONFIRM LOCATION AND DIMENSIONS WITH OWNER BEFORE CONSTRUCTION BEGINS
- SALVAGE AND REUSE EXISTING CRUSHED ROCK SURFACING FOR PAVEMENT BASE
- STABILIZED CONSTRUCTION ENTRANCE 1/D3.1
- REMOVE EXISTING TREES WITH ROOTWAD. DISPOSE ROOTWAD OFFSITE, TREES TO BE CHIPPED, WOOD CHIPS TO BE STOCKPILED ON SITE FOR RESTORATION. (191 +/- TREES)
- NATIVE UNDISTURBED VEGETATION BUFFER, PER BMP C234
- TEMPORARY SECURITY FENCING 1/D3.0
- TREE PROTECTION FENCE 2/D3.0
- SILT FENCE 3/D3.0

KEY MAP (NTS)

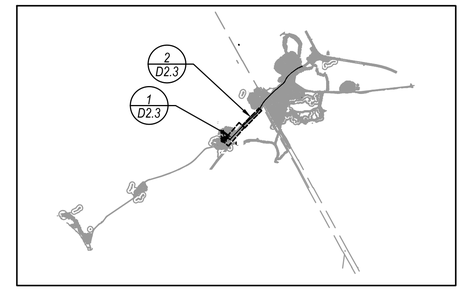

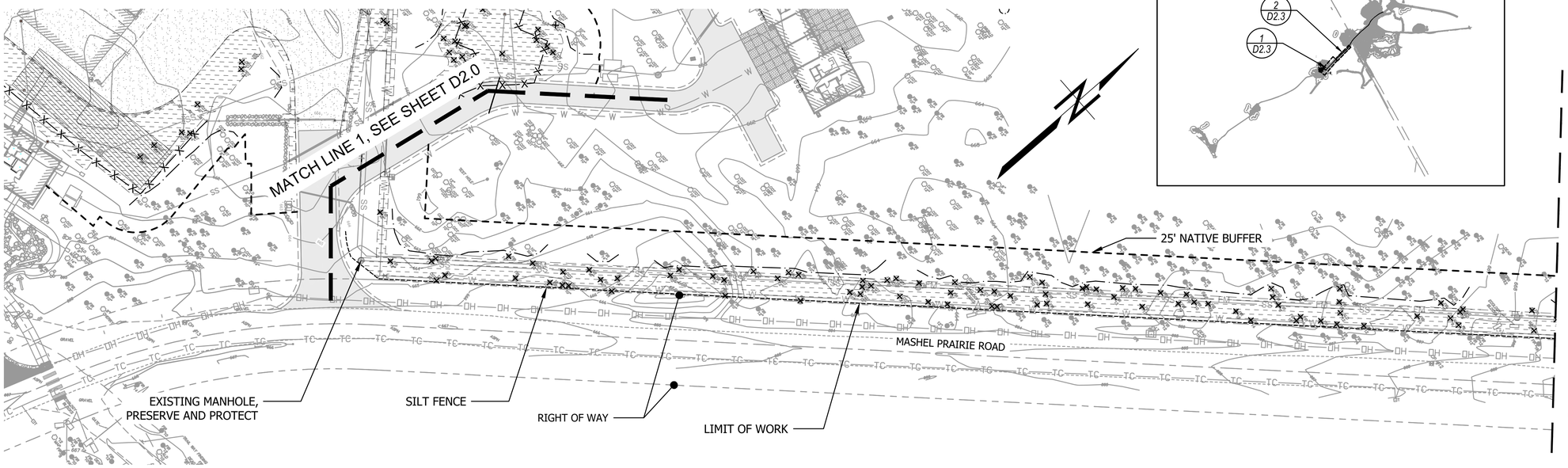

1 D2.3 MASHEL PRAIRIE ROAD - SEGMENT 1 PLAN
SCALE: 1" = 40'-0"

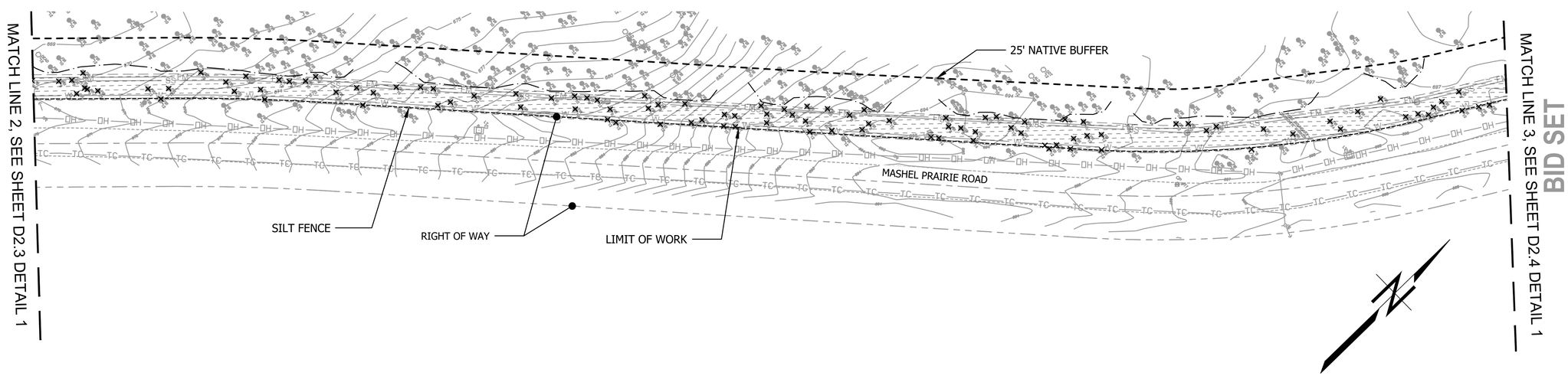

2 D2.3 MASHEL PRAIRIE ROAD - SEGMENT 2 PLAN
SCALE: 1" = 40'-0"

BID SET

SHEET 12 OF 226

CAD NO.

NO.	REVISIONS	INT.	APP.	DATE

ACTION	BY	DATE
DESIGNED		
DRAWN		
CHECKED (FIELD)		
CHECKED (HDQTS.)		

STATE OF WASHINGTON
JONAH HAYES
No. 24012362 EXP. 05/16/2026
LICENSED LANDSCAPE ARCHITECT

REGISTERED STAMP

WASHINGTON STATE PARKS AND RECREATION COMMISSION

NISQUALLY STATE PARK

PHASE 3A MAINTENANCE BUILDING AND WWTF

MASHEL PRAIRIE ROAD DEMO AND TESC PLAN
A-D2.3

SCALE 0 20' 40'

PARKS FILE#

PRIVATE IMPROVEMENTS

1001191
PERMIT #

01-05-2023
DATE

DEVELOPMENT ENGINEER

PIERCE COUNTY ORDINANCE NUMBER 2021-45

1. CONTACT Dennis Peterson THE AREA INSPECTOR, AT 253-798- 2539 TO COORDINATE THE PRE-CONSTRUCTION MEETING AND COUNTY INSPECTIONS. PRE-CONSTRUCTION MEETING SHALL BE REQUESTED AT LEAST 48-HOURS IN ADVANCE OF THE START OF CONSTRUCTION.
2. APPOINT A CERTIFIED EROSION AND SEDIMENT CONTROL LEAD WHO SHALL BE PROVIDED A COPY OF THE SWPPP, EROSION CONTROL PLAN & INSPECTION SCHEDULE.
3. FAILURE TO OBTAIN REQUIRED INSPECTIONS MAY ENDANGER OR DELAY PROJECT APPROVAL.
4. ALL WORK IN THE PUBLIC RIGHT-OF-WAY REQUIRES A GENERAL RIGHT-OF-WAY PERMIT FROM PIERCE COUNTY PLANNING AND PUBLIC WORKS.

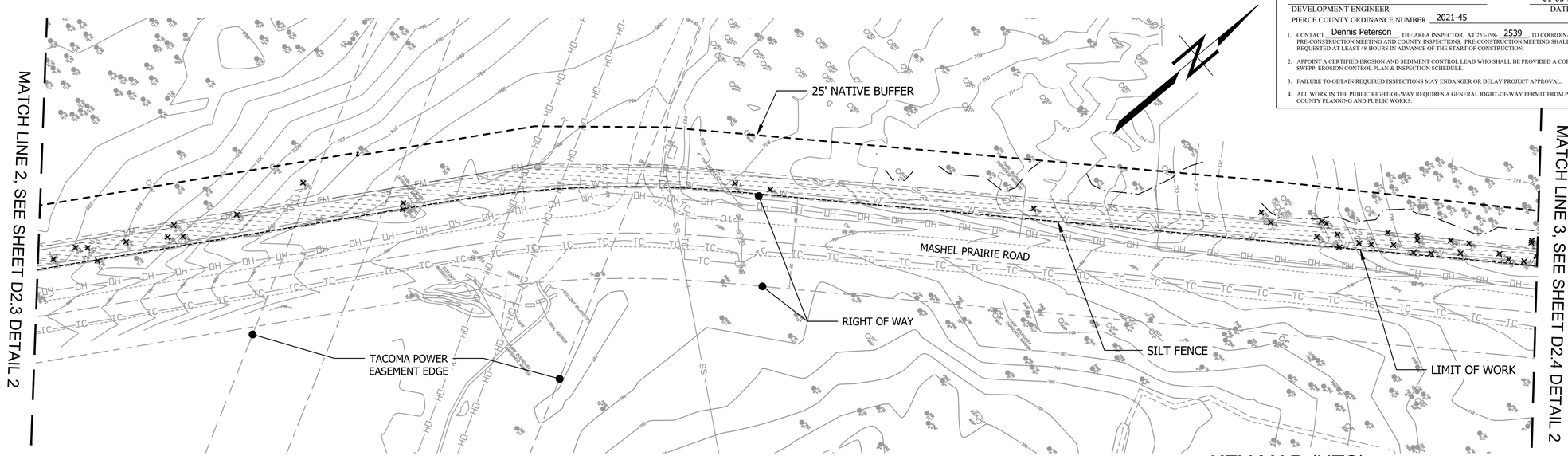

1 D2.4 MASHEL PRAIRIE ROAD - SEGMENT 3 PLAN
SCALE: 1" = 40'-0"

KEY MAP (NTS)

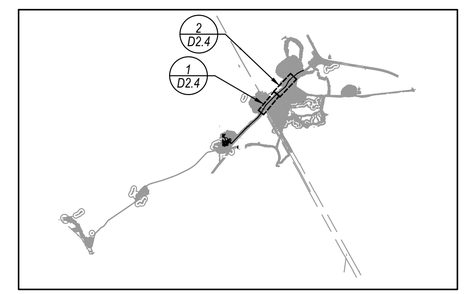

DEMO LEGEND:

- CLEAR & GRUB ALL VEGETATION FROM AREA TO 6" DEPTH MINIMUM OR TO MINERAL SOIL SUB BASE AND DISPOSE OF OFF SITE LEGALLY (28,430 +/- SF)
- × REMOVE EXISTING TREES WITH ROOTWAD. DISPOSE ROOTWAD OFFSITE, TREES TO BE CHIPPED, WOOD CHIPS TO BE STOCKPILED ON SITE FOR RESTORATION. (142 +/- TREES)
- NATIVE UNDISTURBED VEGETATION BUFFER, PER BMP C234
- TREE PROTECTION FENCE 2/D3.0
- SILT FENCE 3/D3.0

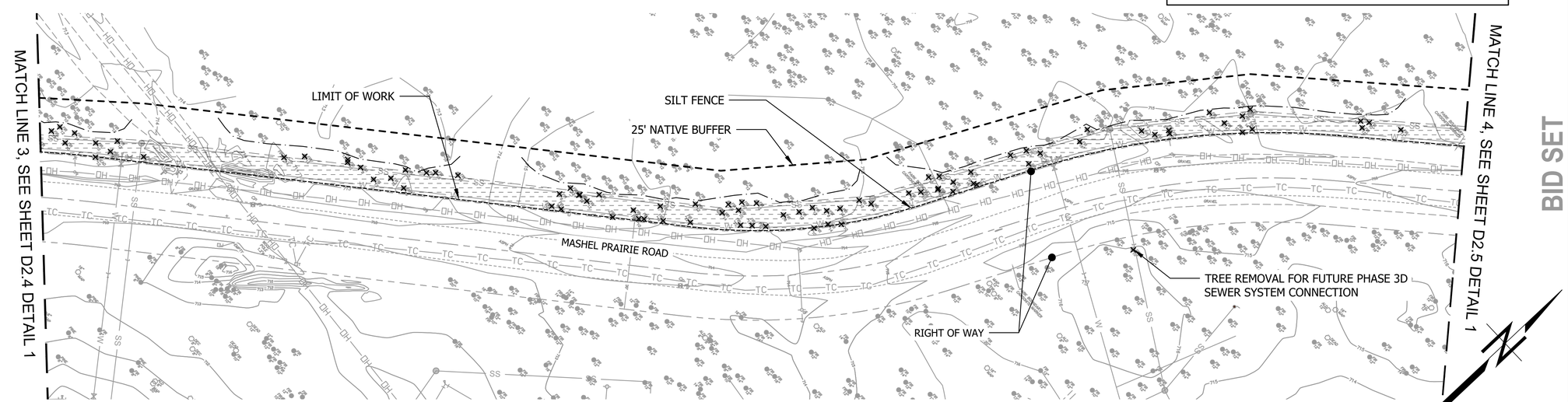

2 D2.4 MASHEL PRAIRIE ROAD - SEGMENT 4 PLAN
SCALE: 1" = 40'-0"

BID SET

SHEET 13 OF 226

CAD NO.

NO.	REVISIONS	INT.	APP.	DATE

ACTION	BY	DATE
DESIGNED		
DRAWN		
CHECKED (FIELD)		
CHECKED (HDQTS.)		

STATE OF WASHINGTON
JONAH HAYES
No. 24012362 EXP. 09/16/2026
LICENSED LANDSCAPE ARCHITECT

REGISTERED STAMP

WASHINGTON STATE PARKS AND RECREATION COMMISSION

NISQUALLY STATE PARK

PHASE 3A MAINTENANCE BUILDING AND WWTF

MASHEL PRAIRIE ROAD DEMO AND TESC PLAN A-D2.4

SCALE 20' 0 40'

PARKS FILE#

PRIVATE IMPROVEMENTS

1001191
PERMIT #

01-05-2023
DATE

DEVELOPMENT ENGINEER

PIERCE COUNTY ORDINANCE NUMBER 2021-45

1. CONTACT Dennis Peterson THE AREA INSPECTOR, AT 253-798- 2539 TO COORDINATE THE PRE-CONSTRUCTION MEETING AND COUNTY INSPECTIONS. PRE-CONSTRUCTION MEETING SHALL BE REQUESTED AT LEAST 48-HOURS IN ADVANCE OF THE START OF CONSTRUCTION.
2. APPOINT A CERTIFIED EROSION AND SEDIMENT CONTROL LEAD WHO SHALL BE PROVIDED A COPY OF THE SWPPP, EROSION CONTROL PLAN & INSPECTION SCHEDULE.
3. FAILURE TO OBTAIN REQUIRED INSPECTIONS MAY ENDANGER OR DELAY PROJECT APPROVAL.
4. ALL WORK IN THE PUBLIC RIGHT-OF-WAY REQUIRES A GENERAL RIGHT-OF-WAY PERMIT FROM PIERCE COUNTY PLANNING AND PUBLIC WORKS.

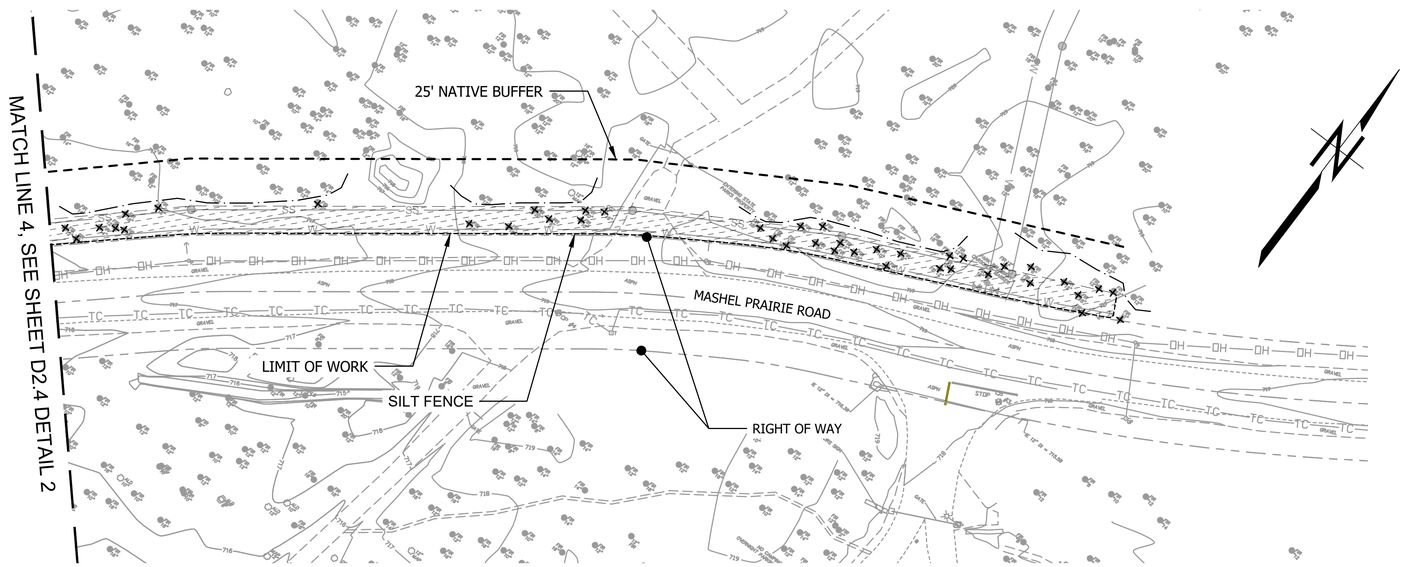

1 D2.5 *MASHEL PRAIRIE ROAD - SEGMENT 5 PLAN*

SCALE: 1" = 40'-0"

KEY MAP (NTS)

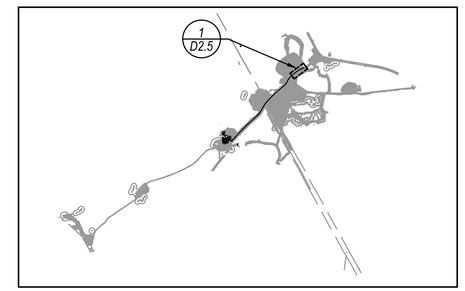

DEMO LEGEND:

- CLEAR & GRUB ALL VEGETATION FROM AREA TO 6" DEPTH MINIMUM OR TO MINERAL SOIL SUB BASE AND DISPOSE OF OFF SITE LEGALLY (7,870 +/- SF)
- × REMOVE EXISTING TREES WITH ROOTWAD. DISPOSE ROOTWAD OFFSITE, TREES TO BE CHIPPED, WOOD CHIPS TO BE STOCKPILED ON SITE FOR RESTORATION. (41 +/- TREES)
- NATIVE UNDISTURBED VEGETATION BUFFER, PER BMP C234
- TREE PROTECTION FENCE 2/D3.0
- SILT FENCE 3/D3.0

BID SET

SHEET 14 OF 226

CAD NO.

NO.	REVISIONS	INT.	APP.	DATE

ACTION	BY	DATE
DESIGNED		
DRAWN		
CHECKED (FIELD)		
CHECKED (HDQTS.)		

STATE OF WASHINGTON · JONAH HAYES · No. 24012362 EXP. 05/16/2026 · LICENSED LANDSCAPE ARCHITECT

REGISTERED STAMP

WASHINGTON STATE PARKS AND RECREATION COMMISSION

NISQUALLY STATE PARK

PHASE 3A MAINTENANCE BUILDING AND WWTF

MASHEL PRAIRIE ROAD DEMO AND TESC PLAN A-D2.5

SCALE 0 20' 40'

PARKS FILE#

PRIVATE IMPROVEMENTS

1001191
PERMIT #

01-05-2023
DATE

DEVELOPMENT ENGINEER

PIERCE COUNTY ORDINANCE NUMBER 2021-45

1. CONTACT Dennis Peterson THE AREA INSPECTOR, AT 253-798- 2539 TO COORDINATE THE PRE-CONSTRUCTION MEETING AND COUNTY INSPECTIONS. PRE-CONSTRUCTION MEETING SHALL BE REQUESTED AT LEAST 48-HOURS IN ADVANCE OF THE START OF CONSTRUCTION.
2. APPOINT A CERTIFIED EROSION AND SEDIMENT CONTROL LEAD WHO SHALL BE PROVIDED A COPY OF THE SWPPP, EROSION CONTROL PLAN & INSPECTION SCHEDULE.
3. FAILURE TO OBTAIN REQUIRED INSPECTIONS MAY ENDANGER OR DELAY PROJECT APPROVAL.
4. ALL WORK IN THE PUBLIC RIGHT-OF-WAY REQUIRES A GENERAL RIGHT-OF-WAY PERMIT FROM PIERCE COUNTY PLANNING AND PUBLIC WORKS.

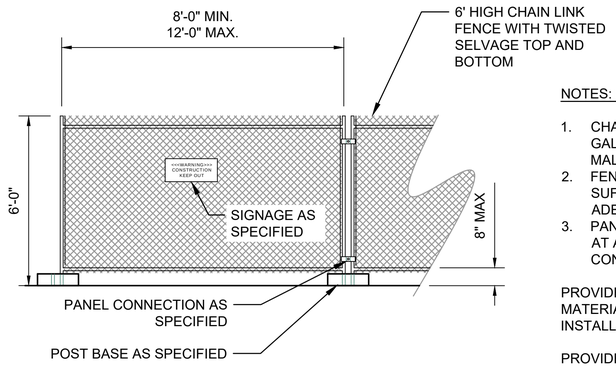

NOTES: INSTALLATION - NON-SLOPED AREAS:

1. CHAIN LINK FABRIC TO BE MIN. 11 GAUGE, GALVANIZED. NO RUSTED OR EXCESSIVELY MALFORMED FABRIC.
2. FENCE BASES SHALL BE CONCRETE AND OF SUFFICIENT WEIGHT AND/OR SPREAD TO ADEQUATELY SUPPORT EACH PANEL.
3. PANEL-TO-PANEL CONNECTIONS SHALL BE MADE AT A MINIMUM OF TWO LOCATIONS PER CONNECTION UNLESS OTHERWISE APPROVED.

PROVIDE OWNER WITH SHOP DRAWINGS DESCRIBING MATERIALS & METHODS FOR SECURE, PLUMB INSTALLATIONS ON SLOPED AREAS.

PROVIDE OWNER WITH SHOP DRAWINGS DESCRIBING MATERIALS & METHODS FOR GATES/ACCESS POINTS INSTALLATIONS.

1 D3.0 TEMPORARY SECURITY FENCING

SCALE: NTS

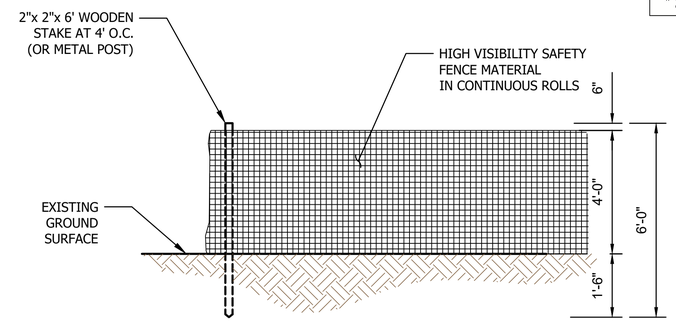

TREE PROTECTION ZONE (TPZ):

1. EXTEND FROM TREE TRUNK TO 1 FOOT FOR EVERY INCH OF TRUNK DIAMETER MEASURED AT 4.5 FEET ABOVE GRADE OR 6' WHICHEVER IS GREATER.
2. PROTECTIVE FENCING TO REMAIN INSTALLED AT ALL TIMES.
3. NO STORAGE OF EQUIPMENT OR MATERIALS WITHIN TPZ, OR WASHING OF EQUIPMENT IN OR WITHIN 10' OF TPZ.

DRIPLINE

1. EXTENDS FROM TRUNK TO OUTER CANOPY EDGE - DRIP LINE.
2. ABSOLUTELY NO STORAGE OF EQUIPMENT OR MATERIALS WITHIN DRIPLINE

2 D3.0 TREE PROTECTION FENCE

SCALE: NOT TO SCALE

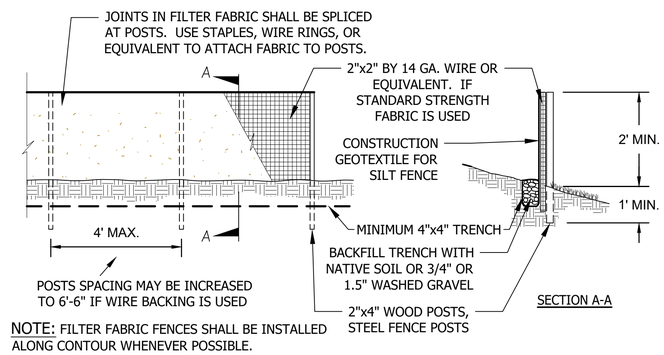

NOTE: FILTER FABRIC FENCES SHALL BE INSTALLED ALONG CONTOUR WHENEVER POSSIBLE.

3 D3.0 SILT FENCE

SCALE: NOT TO SCALE

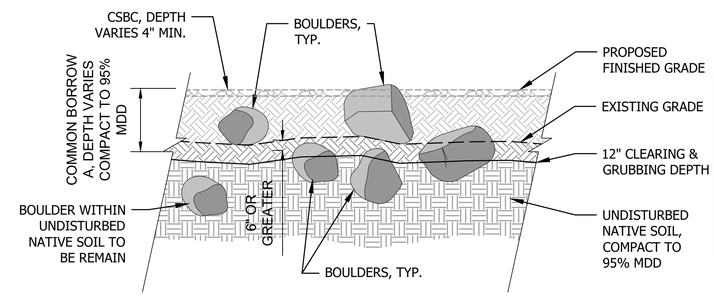

NOTE: BOULDERS DISCOVERED DURING GRUBBING AND EXCAVATION THAT ARE LARGER THAN 1' DIA ARE TO BE SALVAGED AND STOCKPILED ON SITE FOR LATER USE AS DIRECTED BY PROJECT LANDSCAPE ARCHITECT. SMALLER BOULDERS ARE TO BE DISPOSED OF OFF SITE LEGALLY.

4 D3.0 BOULDER IDENTIFICATION

SCALE: NOT TO SCALE

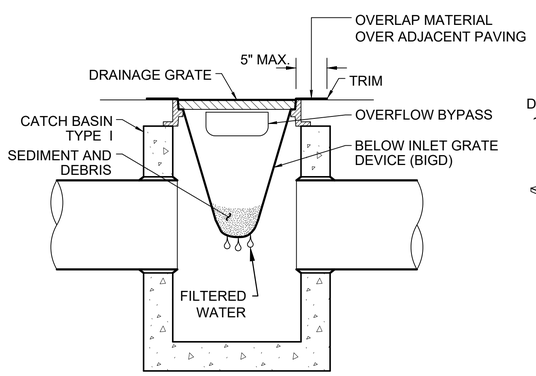

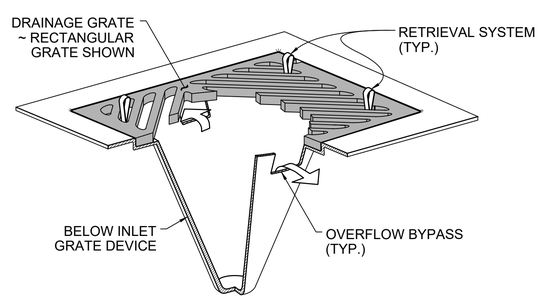

INLET PROTECTION NOTE:

CONTRACTOR SHALL CLEAN-OUT ALL SEDIMENT AND DEBRIS UPON FINAL COMPLETION AND LEAVE THE INLET PROTECTION DEVICE IN PLACE.

INSTALLATION NOTES:

1. SIZE THE BELOW INLET GRATE DEVICE (BIGD) FOR THE STORM WATER STRUCTURE IT WILL SERVICE.
2. THE BIGD SHALL HAVE A BUILT-IN HIGH-FLOW RELIEF SYSTEM (OVERFLOW BYPASS).
3. THE RETRIEVAL SYSTEM MUST ALLOW REMOVAL OF THE BIGD WITHOUT SPILLING THE COLLECTED MATERIAL.
4. PERFORM MAINTENANCE IN ACCORDANCE WITH WSDOT STANDARD SPECIFICATION 8-01.3(15).

5 D3.0 INLET PROTECTION

SCALE: NTS

BID SET

CAD NO.

NO.	REVISIONS	INT.	APP.	DATE

ACTION	BY	DATE
DESIGNED		
DRAWN		
CHECKED (FIELD)		
CHECKED (HDQTS.)		

STATE OF WASHINGTON · JONAH HAYES · No. 20172862 EXP. 09/16/2026 · LICENSED LANDSCAPE ARCHITECT

REGISTERED STAMP

WASHINGTON STATE PARKS AND RECREATION COMMISSION

NISQUALLY STATE PARK

PHASE 3A MAINTENANCE BUILDING AND WWTF

DEMO AND TESC DETAILS

A-D3.0

SCALE

AS SHOWN

PARKS FILE#

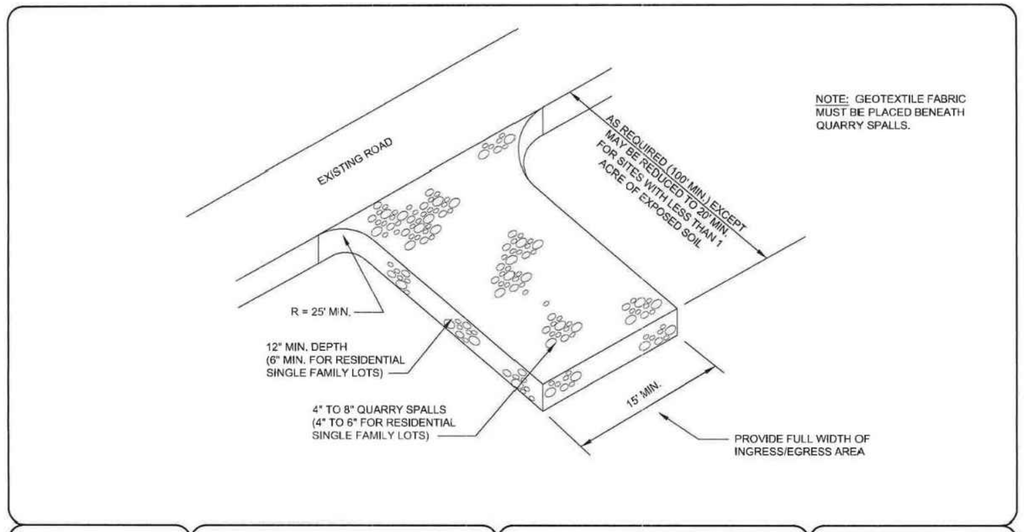

Pierce County
Public Works
Surface Water Management Division
2702 S 42nd Street, Suite 201
Tacoma, Washington 98409-7322

DATE	REVISION	APPR'D	DRAWN
6/2015	2015 SWMM UPDATE	HPH	RUTKOSKY
5/2008	PUBLISH DATE	HPH	RUTKOSKY

HANS P. HUNGER, P.E.
C.I.P. MANAGER

Surface Water Management Division

CONSTRUCTION ENTRANCE ROCK PAD

(NOT TO SCALE)

4.0

Storm Water Manual Details - Section C

1 D3.1 STABILIZED CONSTRUCTION ENTRANCE

SCALE: NTS

PRIVATE IMPROVEMENTS

1001191
PERMIT #

01-05-2023
DATE

DEVELOPMENT ENGINEER

PIERCE COUNTY ORDINANCE NUMBER 2021-45

1. CONTACT Dennis Peterson THE AREA INSPECTOR, AT 253-798- 2539 TO COORDINATE THE PRE-CONSTRUCTION MEETING AND COUNTY INSPECTIONS. PRE-CONSTRUCTION MEETING SHALL BE REQUESTED AT LEAST 48-HOURS IN ADVANCE OF THE START OF CONSTRUCTION.
2. APPOINT A CERTIFIED EROSION AND SEDIMENT CONTROL LEAD WHO SHALL BE PROVIDED A COPY OF THE SWPPP, EROSION CONTROL PLAN & INSPECTION SCHEDULE.
3. FAILURE TO OBTAIN REQUIRED INSPECTIONS MAY ENDANGER OR DELAY PROJECT APPROVAL.
4. ALL WORK IN THE PUBLIC RIGHT-OF-WAY REQUIRES A GENERAL RIGHT-OF-WAY PERMIT FROM PIERCE COUNTY PLANNING AND PUBLIC WORKS.

SWPPP NOTES:

1. APPROVAL OF THE CONSTRUCTION SWPPP DOES NOT CONSTITUTE AN APPROVAL OF PERMANENT ROAD OR DRAINAGE DESIGN (E.G., SIZE AND LOCATION OF ROADS, PIPES, RESTRICTIONS, CHANNELS, RETENTION/DETENTION/INFILTRATION FACILITIES, UTILITIES, ETC.)
2. THE IMPLEMENTATION OF THIS CONSTRUCTION SWPPP AND THE CONSTRUCTION, MAINTENANCE, REPLACEMENT, AND UPGRADING OF THESE CONSTRUCTION SWPPP FACILITIES IS THE RESPONSIBILITY OF THE CONTRACTOR UNTIL ALL CONSTRUCTION IS COMPLETED AND APPROVED AND VEGETATION/LANDSCAPING IS ESTABLISHED.
3. THE BOUNDARIES OF THE CLEARING LIMITS SHOWN ON THIS PLAN SHALL BE CLEARLY FLAGGED IN THE FIELD PRIOR TO CONSTRUCTION. DURING THE CONSTRUCTION PERIOD, NO DISTURBANCE BEYOND THE FLAGGED CLEARING LIMITS SHALL BE ALLOWED. THE FLAGGING SHALL BE MAINTAINED BY THE CONTRACTOR FOR THE DURATION OF CONSTRUCTION.
4. THE CONSTRUCTION SWPPP FACILITIES SHOWN ON THIS PLAN MUST BE CONSTRUCTED IN CONJUNCTION WITH ALL CLEARING AND GRADING ACTIVITIES, AND IN SUCH A MANNER AS TO INSURE THAT SEDIMENT AND SEDIMENT LADEN WATER DO NOT ENTER THE DRAINAGE SYSTEM, ROADWAYS, OR VIOLATE APPLICABLE WATER STANDARDS.
5. THE CONSTRUCTION SWPPP FACILITIES SHOWN ON THIS PLAN ARE THE MINIMUM REQUIREMENTS FOR ANTICIPATED SITE CONDITIONS. DURING THE CONSTRUCTION PERIOD, THESE CONSTRUCTION SWPPP FACILITIES SHALL BE UPGRADED AS NEEDED FOR UNEXPECTED STORM EVENTS AND TO ENSURE THAT SEDIMENT AND SEDIMENT-LADEN WATER DO NOT LEAVE THE SITE.
6. THE CONSTRUCTION SWPPP FACILITIES SHALL BE INSPECTED DAILY BY THE CONTRACTOR AND MAINTAINED AS NECESSARY TO ENSURE THEIR CONTINUED FUNCTIONING.
7. THE CONSTRUCTION SWPPP FACILITIES ON INACTIVE SITES SHALL BE INSPECTED AND MAINTAINED IN ACCORDANCE WITH THE NPDES PERMIT.

DEMOLITON & TESC NOTES:

1. QUANTITIES PROVIDED FOR CONTRACTOR INFORMATION ONLY. CONTRACTOR TO DERIVE THEIR OWN QUANTITIES.
2. STAGING AREA TO BE LOCATED WITHIN THE LIMIT OF WORK.
3. BOULDERS DISCOVERED DURING GRUBBING AND EXCAVATION THAT ARE LARGER THAN 1' DIA ARE TO BE SALVAGED AND STOCKPILED ON SITE FOR LATER USE AS DIRECTED BY PROJECT LANDSCAPE ARCHITECT. SMALLER BOULDERS ARE TO BE DISPOSED OF OFF SITE LEGALLY.
4. EROSION CONTROL MEASURES SHALL BE IN PLACE PRIOR TO THE BEGINNING OF CONSTRUCTION. THE PROJECT ENGINEER AND THE COUNTY SHALL INSPECT AND APPROVE THE INSTALLATION OF EROSION CONTROL MEASURES PRIOR TO BEGINNING CONSTRUCTION.
5. EROSION CONTROL MEASURES ARE NOT LIMITED TO THE ITEMS ON THIS PLAN. THE CONTRACTOR IS RESPONSIBLE FOR THE INSTALLATION AND MAINTENANCE OF ALL EROSION CONTROL MEASURES. NO SILTATION OF EXISTING OR PROPOSED DRAINAGE FACILITIES SHALL BE ALLOWED. CARE SHALL BE TAKEN TO PREVENT MIGRATION OF SILTS TO OFF-SITE PROPERTIES.
6. THE CONTRACTOR SHALL MAKE DAILY SURVEILLANCE OF ALL EROSION CONTROL MEASURES AND MAKE ANY NECESSARY REPAIRS OR ADDITIONS TO THE EROSION CONTROL MEASURES. THE CONTRACTOR SHALL PROVIDE ADDITIONAL EROSION CONTROL MEASURES AS DETERMINED NECESSARY BY THE COUNTY INSPECTOR AND/OR THE PROJECT ENGINEER.
7. DURING THE WET SEASON, NOVEMBER TO MARCH, ALL DISTURBED SOILS SHALL BE STABILIZED WITHIN 48 HOURS AFTER STOP OF WORK. EROSION CONTROL MEASURES SHALL INCLUDE, BUT ARE NOT LIMITED TO, COVERING THE EFFECTED AREA, INCLUDING SPOIL PILES, WITH PLASTIC SHEEETING, STRAW MATTING, JUTE MATTING, STRAW MULCH, OR WOOD CHIPS. SEEDING OF THE DISTURBED AREAS SHALL TAKE PLACE AS WEATHER PERMITS.
8. ALL SEEDED AREAS SHALL BE CHECKED REGULARLY TO MAKE SURE VEGETATION COVERAGE IS COMPLETE. AREAS SHALL BE REPAIRED, RESEEDED, AND FERTILIZED AS REQUIRED.
9. TRACKING OF SOIL OFF-SITE WILL NOT BE ALLOWED. IF ANY SOIL IS TRACKED ONTO A PUBLIC STREET IT SHALL BE REMOVED BY THE END OF THAT WORKING DAY, ANY FURTHER TRACKING OF MUD WILL THEN BE PREVENTED BY SWEEPING OR WASHING OF THE VEHICLE'S TIRES BEFORE DRIVING ON A PUBLIC STREET.
10. NO MORE THAN 500 LF OF TRENCH ON A DOWNSLOPE OR MORE THAN 5% SHALL BE OPENED AT ONE TIME
11. EXCAVATED MATERIAL SHALL BE PLACED ON THE UPHILL SIDE OF TRENCHES
12. TRENCH DEWATERING DEVICES SHALL BE DISCHARGED IN A MANOR THAT WILL NOT ADVERSELY AFFECT FLOWING STREAMS , DRAINAGE SYSTEMS, OR OFF-SITE PROPERTIES.
13. ALL DISTURBED AREAS SHALL BE PLANTED PER THE RESTORATION PLAN UPON COMPLETION OF WORK. THE CONTRACTOR SHALL BE RESPONSIBLE TO ENSURE THAT COMPLETE COVERAGE OF THE DISTURBED AREAS IS PROVIDED & THAT GROWTH OF THE VEGETATION IS MAINTAINED.

BID SET

CAD NO.

NO.	REVISIONS	INT.	APP.	DATE

ACTION	BY	DATE
DESIGNED		
DRAWN		
CHECKED (FIELD)		
CHECKED (HDQTS.)		

STATE OF WASHINGTON
JONAH HAYES
No. 24012362 EXP. 05/16/2026
LICENSED LANDSCAPE ARCHITECT

REGISTERED STAMP

WASHINGTON STATE PARKS AND RECREATION COMMISSION

NISQUALLY STATE PARK

PHASE 3A MAINTENANCE BUILDING AND WWTF

DEMO AND TESC DETAILS & NOTES

A-D3.1

SCALE
AS SHOWN

PARKS FILE#

PRIVATE IMPROVEMENTS

1001191
PERMIT #

01-05-2023
DATE

DEVELOPMENT ENGINEER
PIERCE COUNTY ORDINANCE NUMBER 2021-45

1. CONTACT Dennis Peterson THE AREA INSPECTOR, AT 253-798- 2539 TO COORDINATE THE PRE-CONSTRUCTION MEETING AND COUNTY INSPECTIONS. PRE-CONSTRUCTION MEETING SHALL BE REQUESTED AT LEAST 48-HOURS IN ADVANCE OF THE START OF CONSTRUCTION.
2. APPOINT A CERTIFIED EROSION AND SEDIMENT CONTROL LEAD WHO SHALL BE PROVIDED A COPY OF THE SWPPP, EROSION CONTROL PLAN & INSPECTION SCHEDULE.
3. FAILURE TO OBTAIN REQUIRED INSPECTIONS MAY ENDANGER OR DELAY PROJECT APPROVAL.
4. ALL WORK IN THE PUBLIC RIGHT-OF-WAY REQUIRES A GENERAL RIGHT-OF-WAY PERMIT FROM PIERCE COUNTY PLANNING AND PUBLIC WORKS.

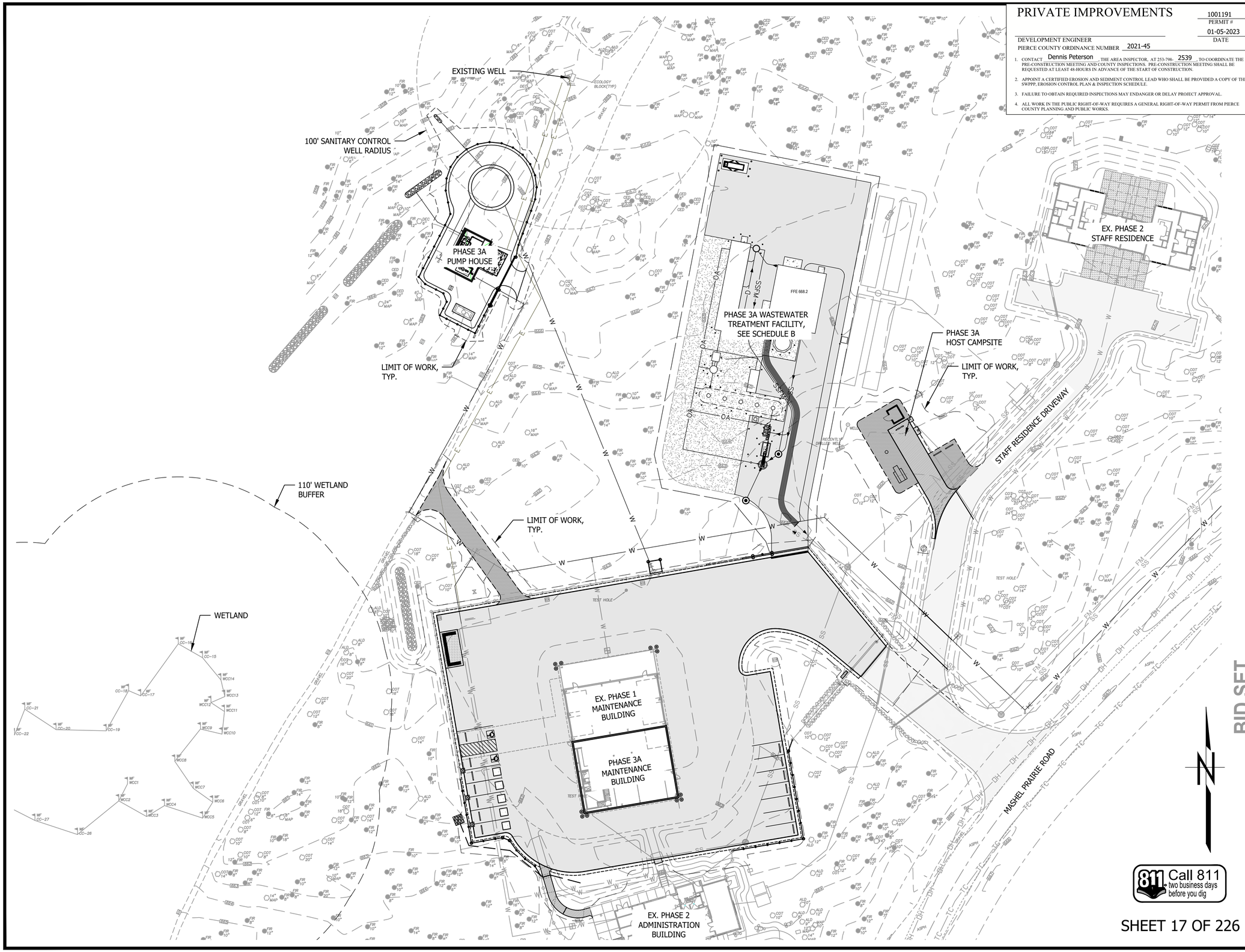

BID SET

SHEET 17 OF 226

CAD NO.

NO.	REVISIONS	INT.	APP.	DATE

ACTION	BY	DATE
DESIGNED		
DRAWN		
CHECKED (FIELD)		
CHECKED (HDQTS.)		

STATE OF WASHINGTON
JONAH HAYES
No. 24012982 EXP 05/16/2026
LICENSED LANDSCAPE ARCHITECT

REGISTERED STAMP

WASHINGTON STATE PARKS AND RECREATION COMMISSION

NISQUALLY STATE PARK

PHASE 3A MAINTENANCE BUILDING AND WWTF

OVERALL SITE LAYOUT

A-C1.0

SCALE 30' 0 60'

PARKS FILE#

O:\2018\18062A New Full Service Park Design Services\Drawings\Sheets\Phase 3\Bid Set 1 Maint, Pump, WWTF, Utility\A-C1.0 Site Plan - Overall.dwg
Jan-08-25 9:39am

MATERIALS SCHEDULE

SYMBOL	DESCRIPTION	QTY	DETAIL
	CRUSHED ROCK SURFACING A	4,000 SF	5/C3.0
	CEMENT CONCRETE PAVEMENT A	120 SF	2/C3.0

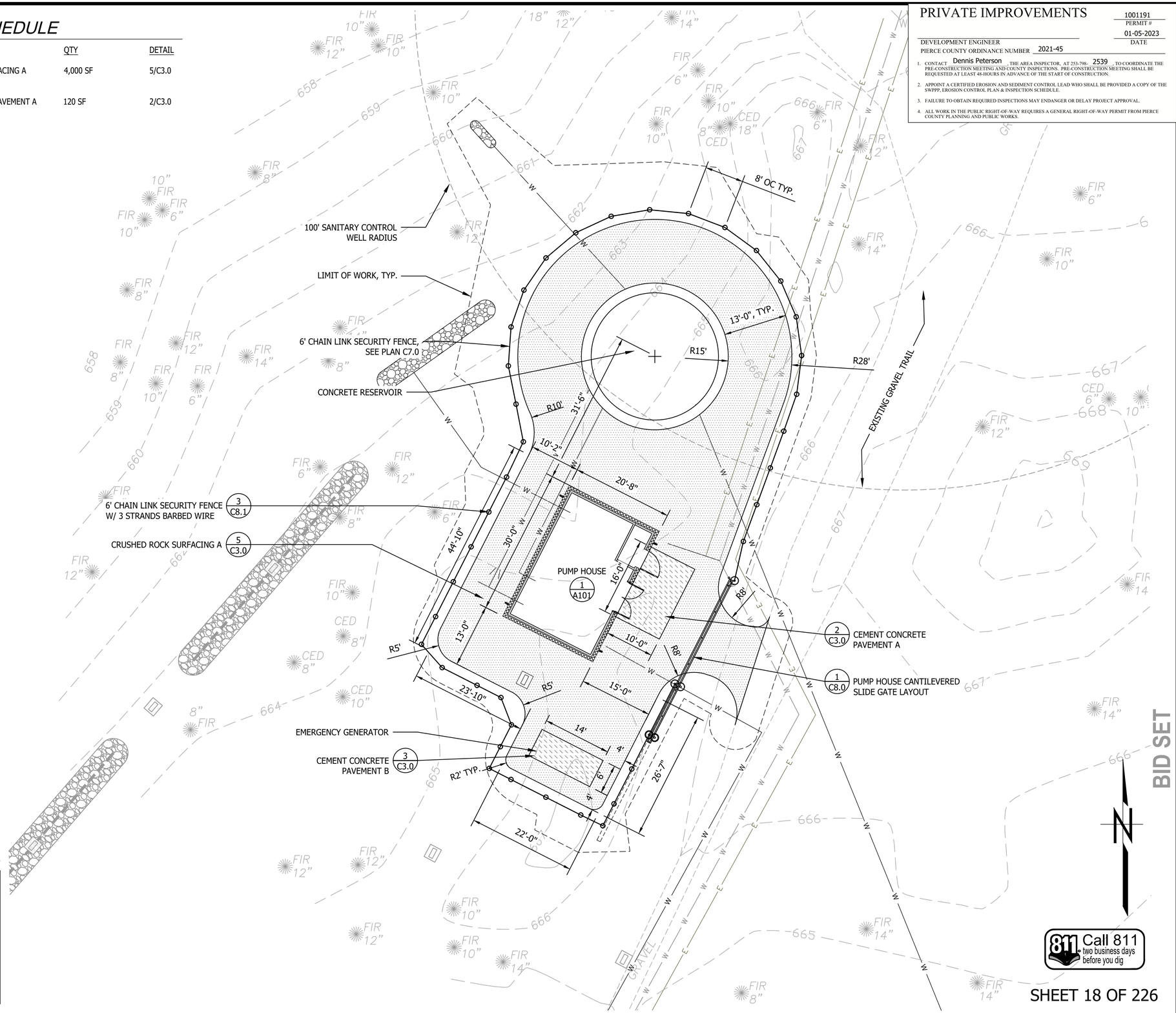

KEYMAP (NTS)

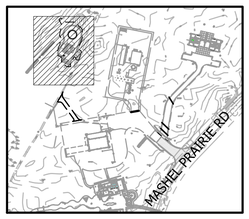

PRIVATE IMPROVEMENTS

1001191
PERMIT #

01-05-2023
DATE

DEVELOPMENT ENGINEER
PIERCE COUNTY ORDINANCE NUMBER 2021-45

1. CONTACT Dennis Peterson THE AREA INSPECTOR, AT 253-798- 2539 TO COORDINATE THE PRE-CONSTRUCTION MEETING AND COUNTY INSPECTIONS. PRE-CONSTRUCTION MEETING SHALL BE REQUESTED AT LEAST 48-HOURS IN ADVANCE OF THE START OF CONSTRUCTION.
2. APPOINT A CERTIFIED EROSION AND SEDIMENT CONTROL LEAD WHO SHALL BE PROVIDED A COPY OF THE SWPPP, EROSION CONTROL PLAN & INSPECTION SCHEDULE.
3. FAILURE TO OBTAIN REQUIRED INSPECTIONS MAY ENDANGER OR DELAY PROJECT APPROVAL.
4. ALL WORK IN THE PUBLIC RIGHT-OF-WAY REQUIRES A GENERAL RIGHT-OF-WAY PERMIT FROM PIERCE COUNTY PLANNING AND PUBLIC WORKS.

CAD NO.

NO.	REVISIONS	INT.	APP.	DATE

ACTION	BY	DATE
DESIGNED		
DRAWN		
CHECKED (FIELD)		
CHECKED (HDQTS.)		

STATE OF WASHINGTON
JONAH HAYES
No. 24012362 Exp. 05/15/2025
LICENSED LANDSCAPE ARCHITECT

REGISTERED STAMP

WASHINGTON STATE PARKS AND RECREATION COMMISSION

NISQUALLY STATE PARK

PHASE 3A MAINTENANCE BUILDING AND WWTF

SITE PLAN - PUMP HOUSE

A-C1.1

SCALE 0 10' 20'

PARKS FILE#

BID SET

Call 811 two business days before you dig

SHEET 18 OF 226

Q:\2018\18062A New Full Service Park Design Services\Drawings\Sheets\Phase 3\Bid Set 1 Maint, Pump, WWTF, Utility\A-C1.1 Site Plan - Pump.dwg
Jan-08-25 9:40am

MATERIALS SCHEDULE

SYMBOL	DESCRIPTION	QTY	DETAIL
	CRUSHED ROCK SURFACING A	3,000 SF	5/C3.0
	CEMENT CONCRETE PAVEMENT A	30 SF	2/C3.0
	CEMENT CONCRETE PAVEMENT B	290 SF	3/C3.0
	HMA PAVEMENT TYPE A	1,300 SF	1/C3.0
	HMA PAVEMENT TYPE B	40,300 SF	1/C3.0

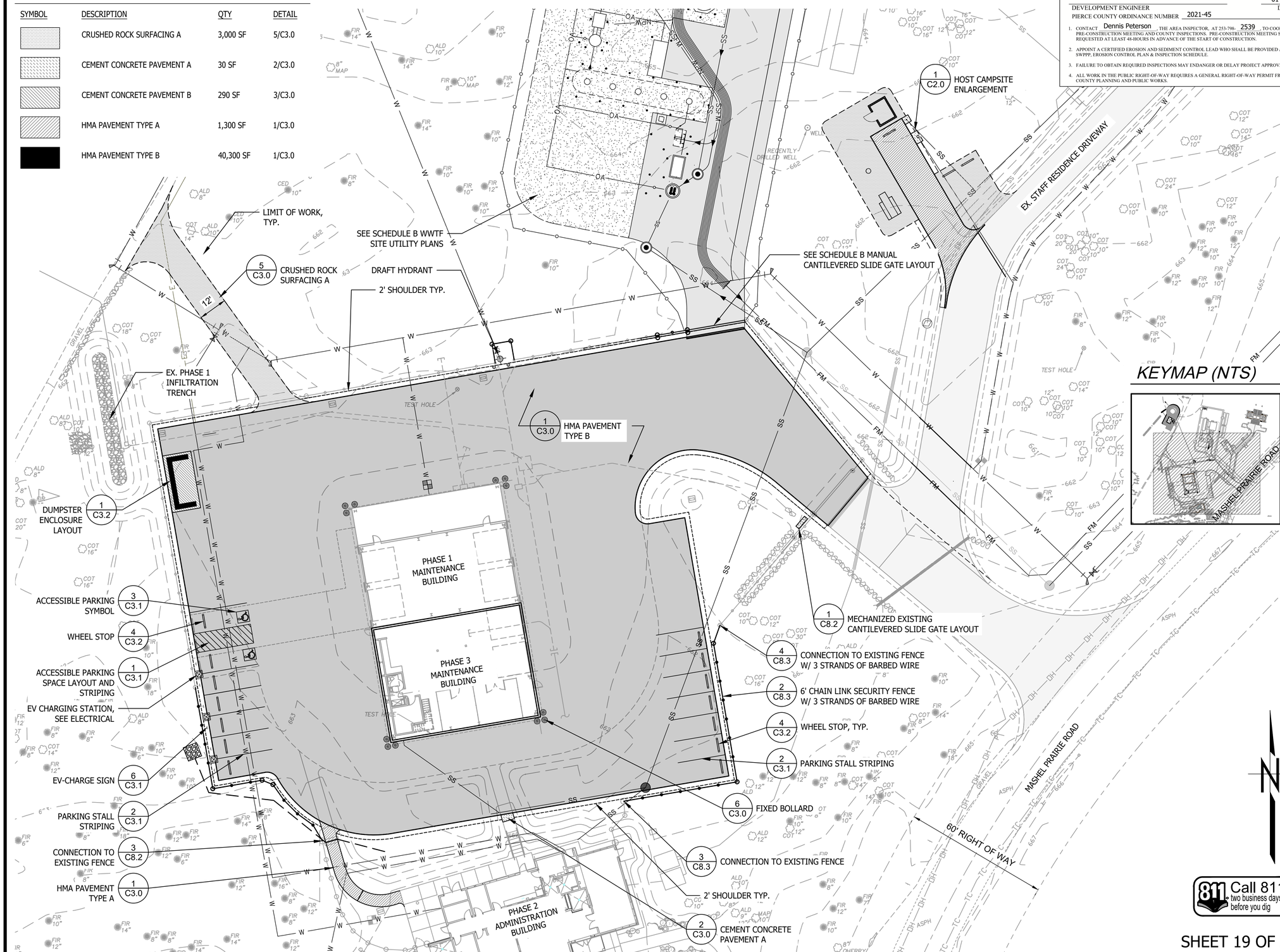

PRIVATE IMPROVEMENTS

1001191
PERMIT #

01-05-2023
DATE

DEVELOPMENT ENGINEER
PIERCE COUNTY ORDINANCE NUMBER 2021-45

1. CONTACT Dennis Peterson THE AREA INSPECTOR, AT 253-798- 2539 TO COORDINATE THE PRE-CONSTRUCTION MEETING AND COUNTY INSPECTIONS. PRE-CONSTRUCTION MEETING SHALL BE REQUESTED AT LEAST 48-HOURS IN ADVANCE OF THE START OF CONSTRUCTION.
2. APPOINT A CERTIFIED EROSION AND SEDIMENT CONTROL LEAD WHO SHALL BE PROVIDED A COPY OF THE SWPPP, EROSION CONTROL PLAN & INSPECTION SCHEDULE.
3. FAILURE TO OBTAIN REQUIRED INSPECTIONS MAY ENDANGER OR DELAY PROJECT APPROVAL.
4. ALL WORK IN THE PUBLIC RIGHT-OF-WAY REQUIRES A GENERAL RIGHT-OF-WAY PERMIT FROM PIERCE COUNTY PLANNING AND PUBLIC WORKS.

CAD NO.

NO.	REVISIONS	INT.	APP.	DATE

ACTION	BY	DATE
DESIGNED		
DRAWN		
CHECKED (FIELD)		
CHECKED (HDQTS.)		

STATE OF WASHINGTON
JONAH HAYES
No. 24012862 EXP 05/16/2026
LICENSED LANDSCAPE ARCHITECT

REGISTERED STAMP

WASHINGTON STATE PARKS AND RECREATION COMMISSION

NISQUALLY STATE PARK

PHASE 3A MAINTENANCE BUILDING AND WWTF

SITE PLAN - MAINTENANCE BUILDING

A-C1.2

BID SET

811 Call 811 two business days before you dig

SCALE
SCALE: 1"=20'
0' 10' 20' 30' 40'

PARKS FILE#

SHEET 19 OF 226

G:\2018\18062A New Full Service Park Design Services\Drawings\Sheets\Phase 3\Bid Set 1 Maint, Pump, WWTF, Utility\A-C1.2 Site Plan - Maint.dwg
Feb-25-25 3:06pm

CONSTRUCTION LEGEND

SYMBOL	KEY	NOTE	DETAIL
	1	CRUSHED ROCK SURFACING A	5/C3.0
	2	2' CRUSHED ROCK SURFACING SHOULDER	
	3	HMA PAVEMENT TYPE A	1/C3.0
	4	CEMENT CONCRETE PAVEMENT A	2/C3.0
	5	WHEEL STOP	4/C3.2
	6	ADA PICNIC TABLE	OFCI
	7	ADA FIRE RING	5/C3.2
	8	RV UTILITY PEDESTAL	8/C3.1
	9	SEWER CONNECTION	2/C3.20

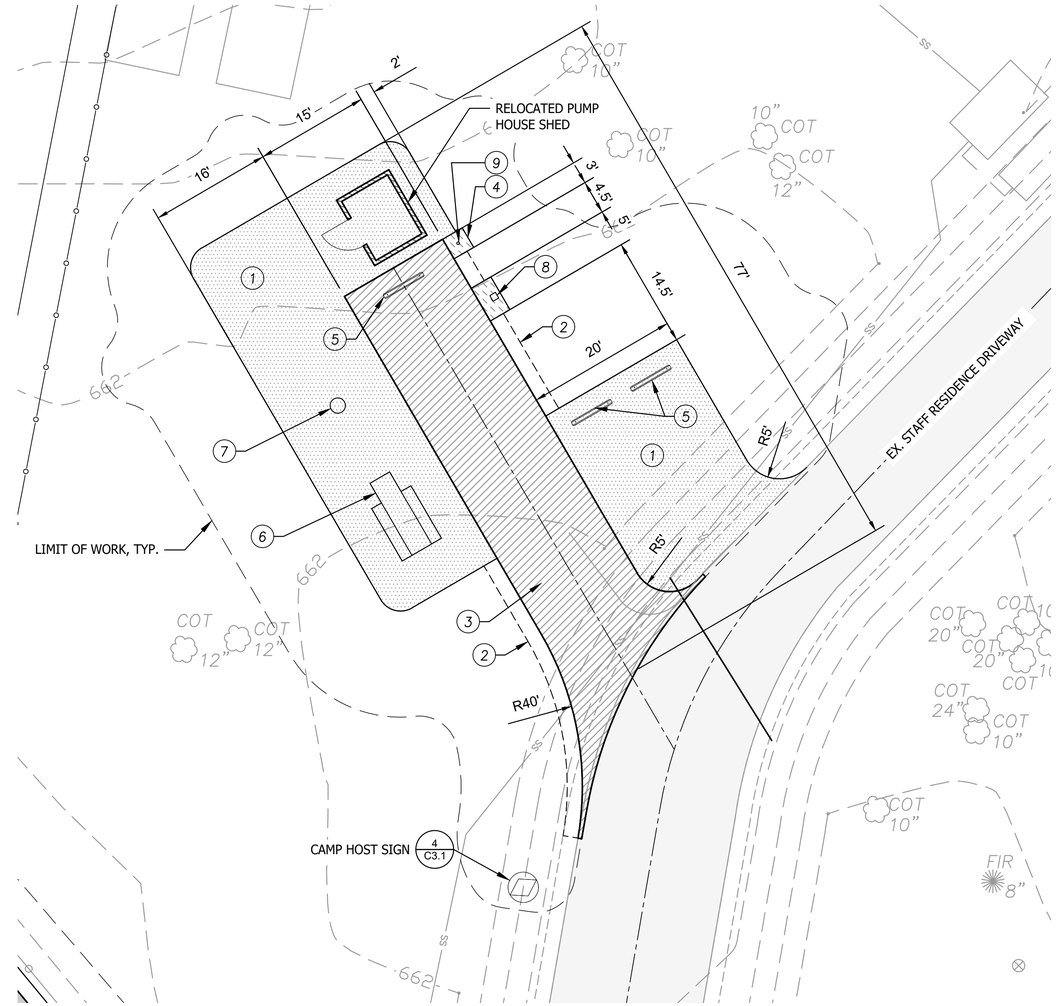

1 C2.0 HOST CAMPSITE ENLARGEMENT
SCALE: 1"= 10'-0"

KEYMAP (NTS)

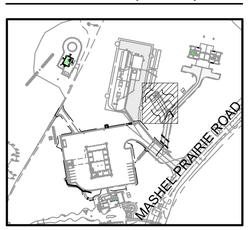

PRIVATE IMPROVEMENTS

1001191
PERMIT #

01-05-2023
DATE

DEVELOPMENT ENGINEER

PIERCE COUNTY ORDINANCE NUMBER 2021-45

1. CONTACT Dennis Peterson THE AREA INSPECTOR, AT 253-798- 2539 TO COORDINATE THE PRE-CONSTRUCTION MEETING AND COUNTY INSPECTIONS. PRE-CONSTRUCTION MEETING SHALL BE REQUESTED AT LEAST 48-HOURS IN ADVANCE OF THE START OF CONSTRUCTION.
2. APPOINT A CERTIFIED EROSION AND SEDIMENT CONTROL LEAD WHO SHALL BE PROVIDED A COPY OF THE SWPPP, EROSION CONTROL PLAN & INSPECTION SCHEDULE.
3. FAILURE TO OBTAIN REQUIRED INSPECTIONS MAY ENDANGER OR DELAY PROJECT APPROVAL.
4. ALL WORK IN THE PUBLIC RIGHT-OF-WAY REQUIRES A GENERAL RIGHT-OF-WAY PERMIT FROM PIERCE COUNTY PLANNING AND PUBLIC WORKS.

CAD NO.

NO.	REVISIONS	INT.	APP.	DATE

ACTION	BY	DATE
DESIGNED		
DRAWN		
CHECKED (FIELD)		
CHECKED (HDQTS.)		

STATE OF WASHINGTON
JONAH HAYES
No. 24012362 Exp. 09/16/2026
LICENSED LANDSCAPE ARCHITECT

REGISTERED STAMP

WASHINGTON STATE PARKS AND RECREATION COMMISSION

NISQUALLY STATE PARK

PHASE 3A MAINTENANCE BUILDING AND WWTF

HOST CAMPSITE ENLARGEMENT
A-C2.0

BID SET

Call 811 two business days before you dig

SCALE: 1"=10'
0 5' 10' 15' 20'

SHEET 20 OF 226

PARKS FILE#

O:\2018\180620A New Full Service Park Design Services\Drawings\Sheets\Phase 3\Bid Set 1 Maint, Pump, WWTF, Utility\A-C2.0 Enlargement Plan - Camp Host.dwg
Feb-25-25 3:11pm

PRIVATE IMPROVEMENTS

1001191
PERMIT #

01-05-2023
DATE

DEVELOPMENT ENGINEER
PIERCE COUNTY ORDINANCE NUMBER 2021-45

1. CONTACT Dennis Peterson THE AREA INSPECTOR, AT 253-798- 2539 TO COORDINATE THE PRE-CONSTRUCTION MEETING AND COUNTY INSPECTIONS. PRE-CONSTRUCTION MEETING SHALL BE REQUESTED AT LEAST 48-HOURS IN ADVANCE OF THE START OF CONSTRUCTION.
2. APPOINT A CERTIFIED EROSION AND SEDIMENT CONTROL LEAD WHO SHALL BE PROVIDED A COPY OF THE SWPPP, EROSION CONTROL PLAN & INSPECTION SCHEDULE.
3. FAILURE TO OBTAIN REQUIRED INSPECTIONS MAY ENDANGER OR DELAY PROJECT APPROVAL.
4. ALL WORK IN THE PUBLIC RIGHT-OF-WAY REQUIRES A GENERAL RIGHT-OF-WAY PERMIT FROM PIERCE COUNTY PLANNING AND PUBLIC WORKS.

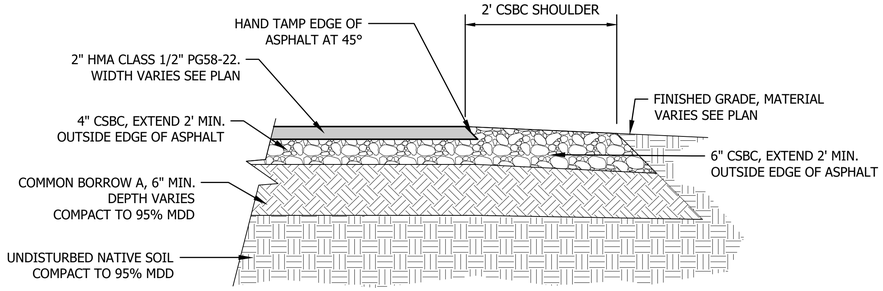

HMA PAVEMENT TYPE A

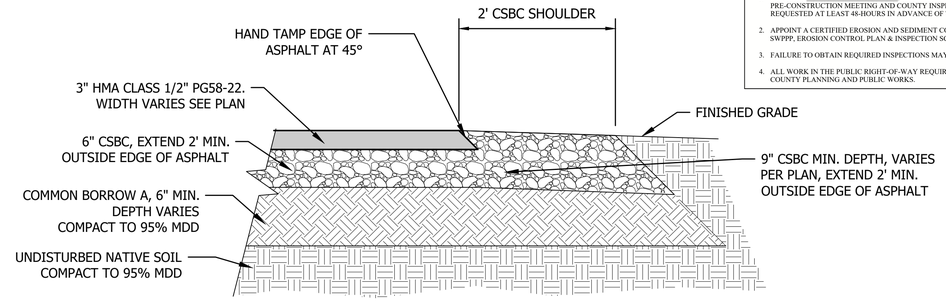

HMA PAVEMENT TYPE B

1 C3.0 HMA PAVEMENT TYPE A & B
SCALE: 1= 1'-0"

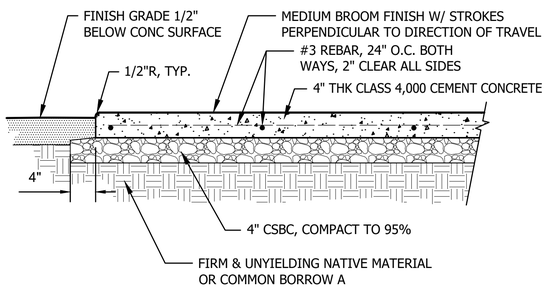

2 C3.0 CEMENT CONCRETE PAVEMENT A
SCALE: 1= 1'-0"

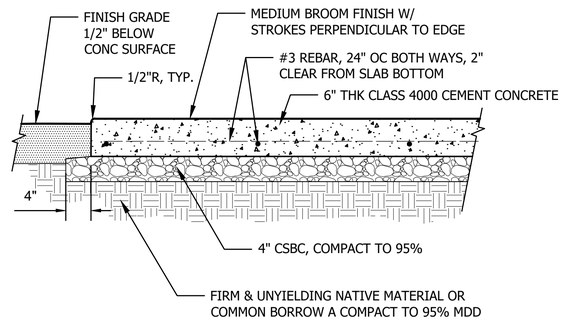

3 C3.0 CEMENT CONCRETE PAVEMENT B
SCALE: 1= 1'-0"

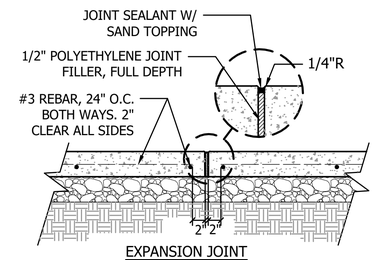

EXPANSION JOINT

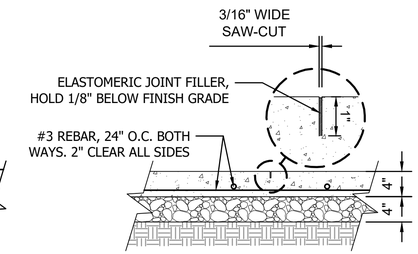

CONTROL JOINT

4 C3.0 CONTROL AND EXPANSION JOINTS
SCALE: 1= 1'-0"

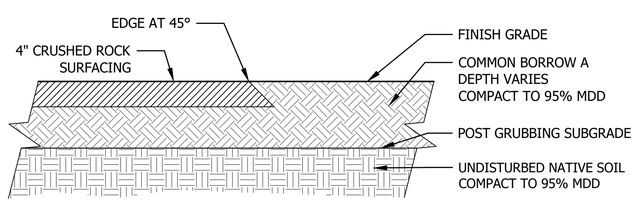

5 C3.0 CRUSHED ROCK SURFACING A
SCALE: 1= 1'-0"

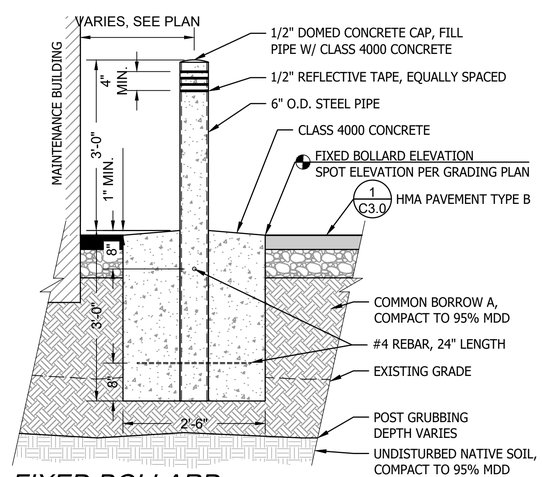

6 C3.0 FIXED BOLLARD
SCALE: 1" = 1'-0"

SHEET 21 OF 226

BID SET

CAD NO.

NO.	REVISIONS	INT.	APP.	DATE

ACTION	BY	DATE
DESIGNED		
DRAWN		
CHECKED (FIELD)		
CHECKED (HDQTS.)		

STATE OF WASHINGTON · JONAH HAYES · No. 24012362 Exp. 06/16/2026 · LICENSED LANDSCAPE ARCHITECT

REGISTERED STAMP

WASHINGTON STATE PARKS AND RECREATION COMMISSION

NISQUALLY STATE PARK

PHASE 3A MAINTENANCE BUILDING AND WWTF

SITE DETAILS

A-C3.0

SCALE
AS SHOWN

PARKS FILE#

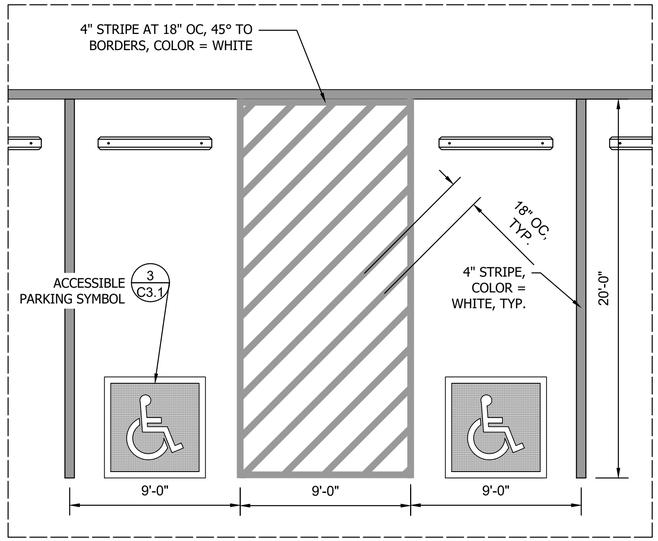

1 C3.1 *ACCESSIBLE PARKING SPACE LAYOUT AND STRIPING*
SCALE: 1/4"= 1'-0"

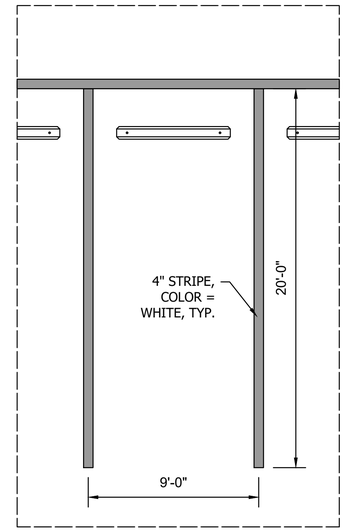

2 C3.1 *PARKING STALL STRIPING*
SCALE: 1/4"= 1'-0"

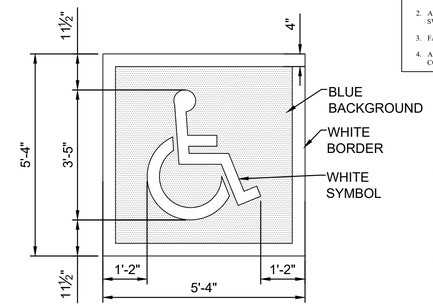

NOTES:

1. *60" X 60" BLUE BACKGROUND. BLUE SHALL BE IN ACCORDANCE WITH MUTCD/FEDERAL SPECIFICATIONS. (COLUMBIA PAINT 17-123-21 INSTANT DRY ACRYLIC TRAFFIC PAINT "HANDICAP BLUE" OR EQUIVALENT)*
2. *ACCESSIBLE PARKING SYMBOL PER WSDOT STANDARD PLAN M-24.60-04*

3 C3.1 *ACCESSIBLE PARKING SYMBOL*
SCALE: 1/2"= 1'-0"

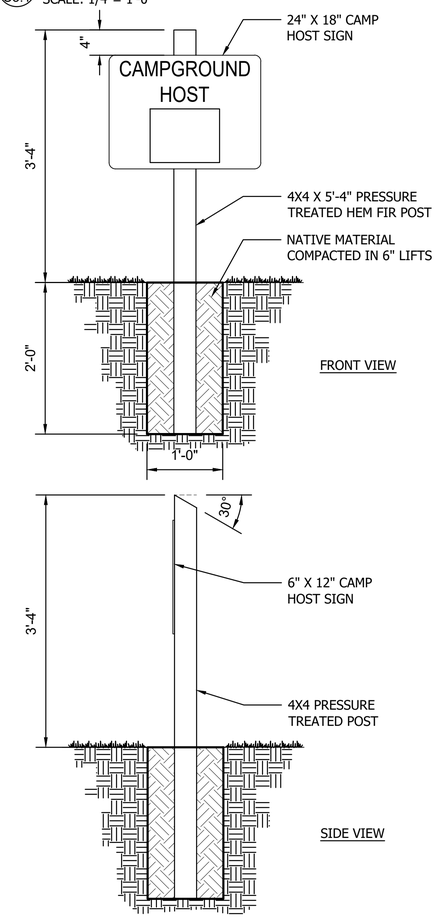

4 C3.1 *CAMP HOST SIGN*
SCALE: 1= 1'-0"

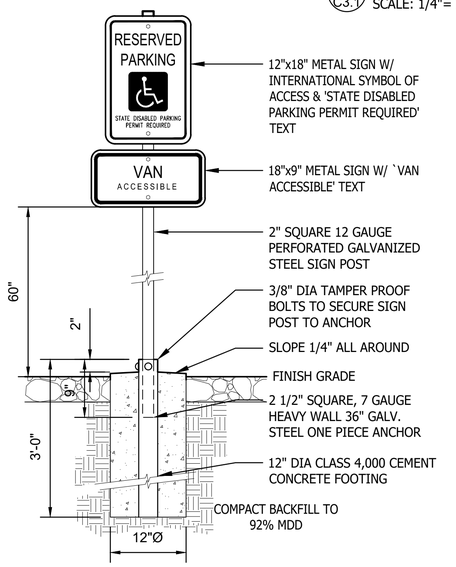

5 C3.1 *VAN ACCESSIBLE REGULATORY SIGN*
SCALE: 1/4"= 1'-0"

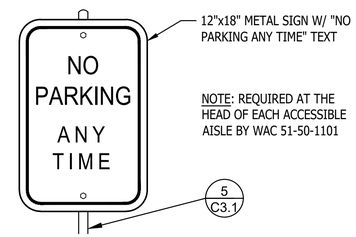

NOTE: REQUIRED AT THE HEAD OF EACH ACCESSIBLE AISLE BY WAC 51-50-1101

SIGN NOTES
ALL SIGN PANELS ARE TO BE OWNER FURNISHED CONTRACTOR INSTALLED

7 C3.1 *NO PARKING REGULATORY SIGN*
SCALE: 1"= 1'-0"

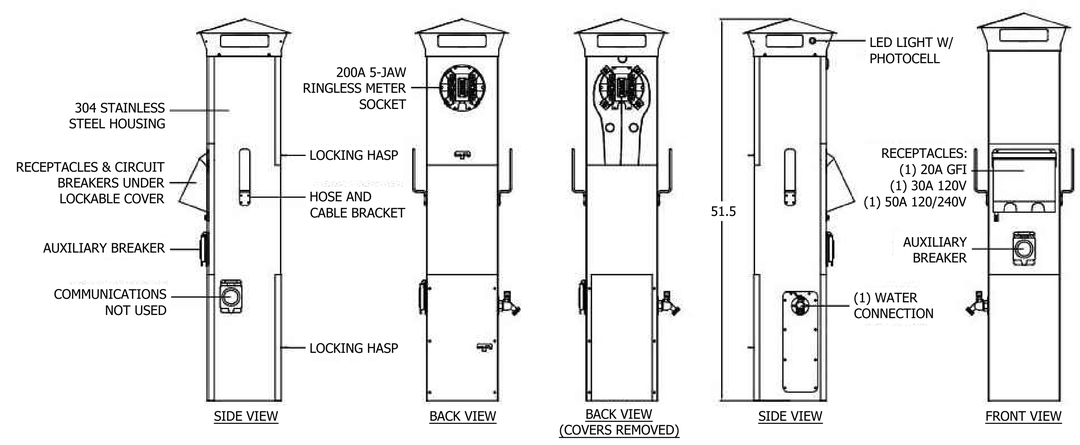

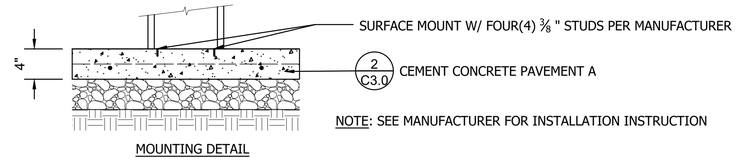

NOTE: SEE MANUFACTURER FOR INSTALLATION INSTRUCTION

8 C3.1 *RV UTILITY PEDESTAL*
SCALE: NTS

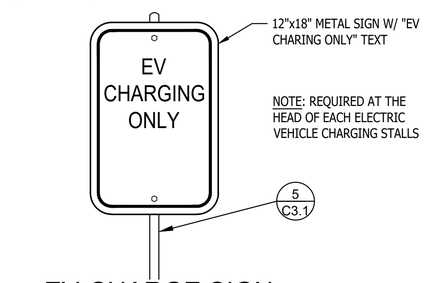

NOTE: REQUIRED AT THE HEAD OF EACH ELECTRIC VEHICLE CHARGING STALLS

6 C3.1 *EV-CHARGE SIGN*
SCALE: 1/2"= 1'-0"

PRIVATE IMPROVEMENTS

1001191
PERMIT #

01-05-2023
DATE

DEVELOPMENT ENGINEER
PIERCE COUNTY ORDINANCE NUMBER 2021-45

1. CONTACT Dennis Peterson THE AREA INSPECTOR, AT 253-798- 2539 TO COORDINATE THE PRE-CONSTRUCTION MEETING AND COUNTY INSPECTIONS. PRE-CONSTRUCTION MEETING SHALL BE REQUESTED AT LEAST 48-HOURS IN ADVANCE OF THE START OF CONSTRUCTION.
2. APPOINT A CERTIFIED EROSION AND SEDIMENT CONTROL LEAD WHO SHALL BE PROVIDED A COPY OF THE SWPPP, EROSION CONTROL PLAN & INSPECTION SCHEDULE.
3. FAILURE TO OBTAIN REQUIRED INSPECTIONS MAY ENDANGER OR DELAY PROJECT APPROVAL.
4. ALL WORK IN THE PUBLIC RIGHT-OF-WAY REQUIRES A GENERAL RIGHT-OF-WAY PERMIT FROM PIERCE COUNTY PLANNING AND PUBLIC WORKS.

CAD NO.

NO.	REVISIONS	INT.	APP.	DATE

ACTION	BY	DATE
DESIGNED		
DRAWN		
CHECKED (FIELD)		
CHECKED (HDQTS.)		

REGISTERED STAMP

WASHINGTON STATE PARKS AND RECREATION COMMISSION

NISQUALLY STATE PARK

PHASE 3A MAINTENANCE BUILDING AND WWTF

SIGNAGE AND STRIPING DETAILS

A-C3.1

SCALE
AS SHOWN

PARKS FILE#

BID SET

PRIVATE IMPROVEMENTS

1001191
PERMIT #

01-05-2023
DATE

DEVELOPMENT ENGINEER
PIERCE COUNTY ORDINANCE NUMBER 2021-45

1. CONTACT Dennis Peterson THE AREA INSPECTOR, AT 253-798- 2539 TO COORDINATE THE PRE-CONSTRUCTION MEETING AND COUNTY INSPECTIONS. PRE-CONSTRUCTION MEETING SHALL BE REQUESTED AT LEAST 48-HOURS IN ADVANCE OF THE START OF CONSTRUCTION.
2. APPOINT A CERTIFIED EROSION AND SEDIMENT CONTROL LEAD WHO SHALL BE PROVIDED A COPY OF THE SWPPP, EROSION CONTROL PLAN & INSPECTION SCHEDULE.
3. FAILURE TO OBTAIN REQUIRED INSPECTIONS MAY ENDANGER OR DELAY PROJECT APPROVAL.
4. ALL WORK IN THE PUBLIC RIGHT-OF-WAY REQUIRES A GENERAL RIGHT-OF-WAY PERMIT FROM PIERCE COUNTY PLANNING AND PUBLIC WORKS.

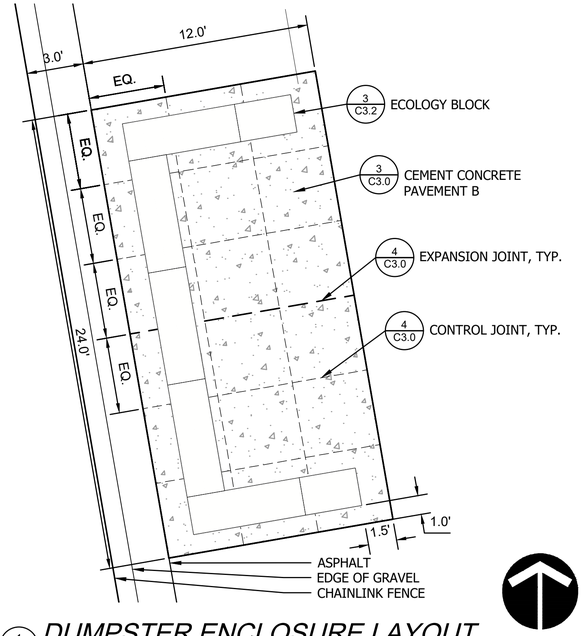

1 C3.2 *DUMPSTER ENCLOSURE LAYOUT*
SCALE: 1-1/2" = 1'-0"

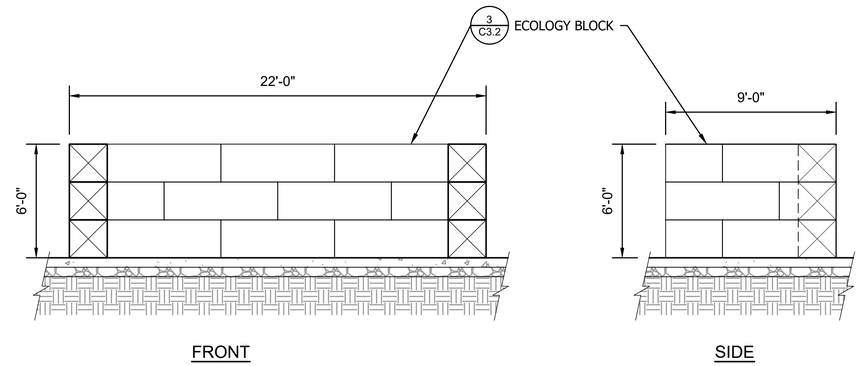

2 C3.2 *DUMPSTER ENCLOSURE ELEVATIONS*
SCALE: 1/4" = 1'-0"

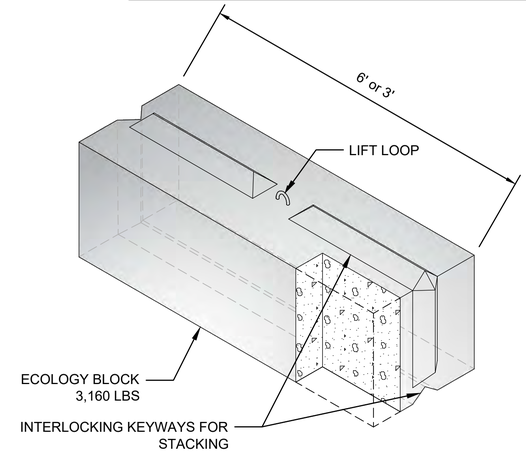

3 C3.2 *ECOLOGY BLOCK*
SCALE: 1-1/2" = 1'-0"

NOTE:
SEE PLAN FOR LAYOUT, CENTER WHEELSTOP IN PARKING SPACE.

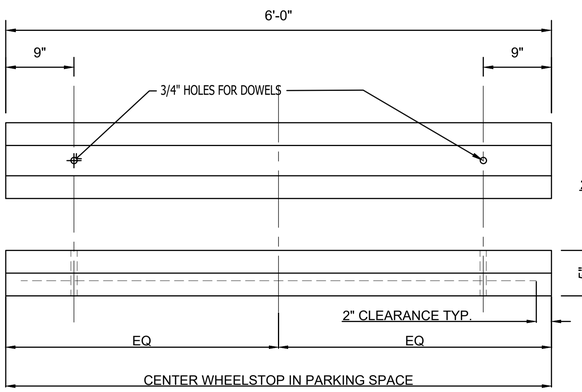

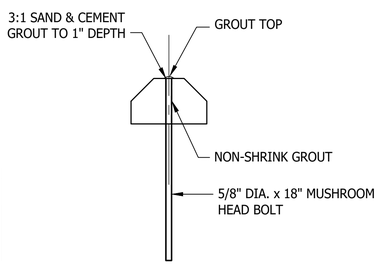

ATTACHMENT DETAIL

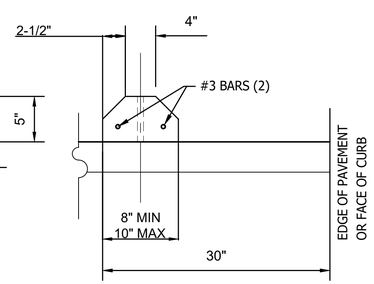

4 C3.2 *WHEEL STOP*
SCALE: 1= 1'-0"

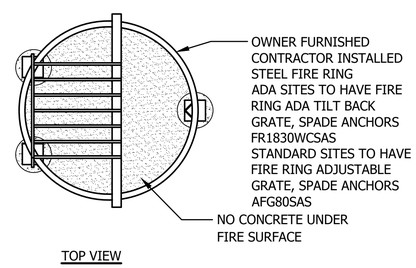

TOP VIEW

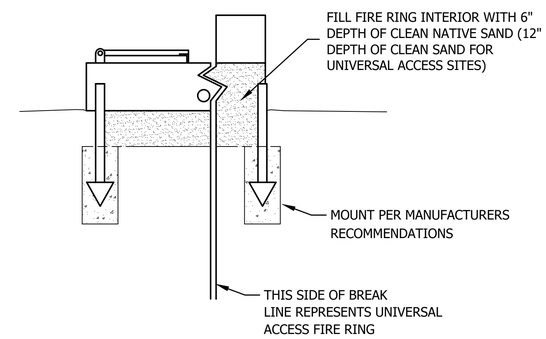

SIDE VIEW

5 C3.2 *FIRE RING*
SCALE: 1" = 1'-0"

BID SET

CAD NO.

NO.	REVISIONS	INT.	APP.	DATE

ACTION	BY	DATE
DESIGNED		
DRAWN		
CHECKED (FIELD)		
CHECKED (HDQTS.)		

STATE OF WASHINGTON · JONAH HAYES · No. 24012362 EXP. 05/16/2026 · LICENSED LANDSCAPE ARCHITECT

REGISTERED STAMP

WASHINGTON STATE PARKS AND RECREATION COMMISSION

NISQUALLY STATE PARK

PHASE 3A MAINTENANCE BUILDING AND WWTF

SITE DETAILS

A-C3.2

SCALE
AS SHOWN

PARKS FILE#

PRIVATE IMPROVEMENTS

1001191
PERMIT #

01-05-2023
DATE

DEVELOPMENT ENGINEER

PIERCE COUNTY ORDINANCE NUMBER 2021-45

1. CONTACT Dennis Peterson THE AREA INSPECTOR, AT 253-798- 2539 TO COORDINATE THE PRE-CONSTRUCTION MEETING AND COUNTY INSPECTIONS. PRE-CONSTRUCTION MEETING SHALL BE REQUESTED AT LEAST 48-HOURS IN ADVANCE OF THE START OF CONSTRUCTION.
2. APPOINT A CERTIFIED EROSION AND SEDIMENT CONTROL LEAD WHO SHALL BE PROVIDED A COPY OF THE SWPPP, EROSION CONTROL PLAN & INSPECTION SCHEDULE.
3. FAILURE TO OBTAIN REQUIRED INSPECTIONS MAY ENDANGER OR DELAY PROJECT APPROVAL.
4. ALL WORK IN THE PUBLIC RIGHT-OF-WAY REQUIRES A GENERAL RIGHT-OF-WAY PERMIT FROM PIERCE COUNTY PLANNING AND PUBLIC WORKS.

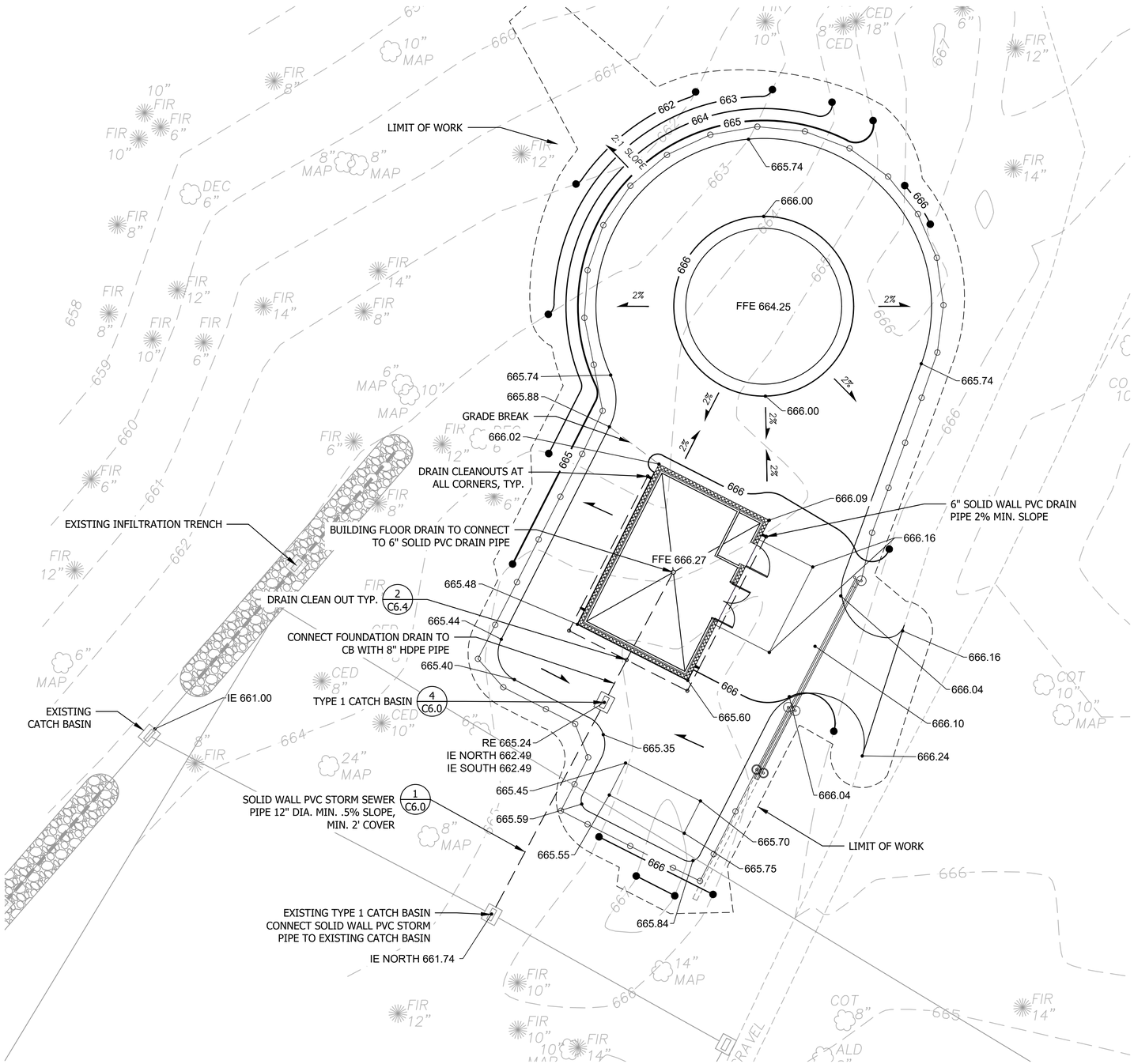

CATCH BASIN STRUCTURE TABLE

STRUCTURE	RE	IE	LID
TYPE 1 CATCH BASIN	665.24	IE NORTH 662.49 IE SOUTH 662.49	VANED GRATE

GRADING LEGEND:

XXX	PROPOSED INTERMEDIATE CONTOUR
XXX	PROPOSED INDEX CONTOUR
	GRADE BREAK
	LIMIT OF WORK
	DIRECTION OF SLOPE
662.3	FINISH GRADE ELEVATION
FFE	FINISH FLOOR ELEVATION
HP	HIGH POINT (CRUSHED SURFACING)
LP	LOW POINT (CRUSHED SURFACING)
RE	RIM ELEVATION
IE	INVERT ELEVATION
TW	TOP OF WALL +/-

NOTE: UNLESS NOTED OTHERWISE, ALL SPOT ELEVATIONS ARE TO TOP OF SURFACING

BID SET

Call 811 two business days before you dig

SHEET 24 OF 226

CAD NO.

NO.	REVISIONS	INT.	APP.	DATE

ACTION	BY	DATE
DESIGNED		
DRAWN		
CHECKED (FIELD)		
CHECKED (HDQTS.)		

STATE OF WASHINGTON JONAH HAYES No. 24012382 EXP. 05/15/2026 LICENSED LANDSCAPE ARCHITECT

REGISTERED STAMP

WASHINGTON STATE PARKS AND RECREATION COMMISSION

NISQUALLY STATE PARK

PHASE 3A MAINTENANCE BUILDING AND WWTF GRADING & DRAINAGE PLAN - PUMP HOUSE A-C4.0

SCALE 0 10' 20'

PARKS FILE#

O:\2018\18062A New Full Service Park Design Services\Drawings\Sheets\Phase 3\Bid Set 1 Maint, Pump, WWTF, Utility\A-C4.0 Grading Plan - Pump.dwg
Feb-26-25 10:31am

EXISTING CATCH BASIN STRUCTURE LEGEND

STRUCTURE NO.	TYPE	EXISTING RIM ELEVATION	PROPOSED RIM ELEVATION
1	TYPE 1 CATCH BASIN	662.97	662.97
2	TYPE 1 CATCH BASIN	662.97	663.30
3	TYPE 1 CATCH BASIN	662.97	663.47
4	TYPE 1 CATCH BASIN	662.74	663.00

GRADING LEGEND:

XXX	PROPOSED INTERMEDIATE CONTOUR
XXX	PROPOSED INDEX CONTOUR
	GRADE BREAK
	LIMIT OF WORK
	DIRECTION OF SLOPE
662.3	FINISH GRADE ELEVATION
FFE	FINISH FLOOR ELEVATION
HP	HIGH POINT (CRUSHED SURFACING)
LP	LOW POINT (CRUSHED SURFACING)
RE	RIM ELEVATION
IE	INVERT ELEVATION
TW	TOP OF WALL +/-
TC	TOP OF CURB
BC	BOTTOM OF CURB
ME	MATCH EXISTING

4" SOLID WALL PVC STORM SEWER PIPE LENGTH SCHEDULE

KEY	PIPE LENGTH
5	50 LF
6	50 LF

PRIVATE IMPROVEMENTS

1001191
PERMIT #

01-05-2023
DATE

DEVELOPMENT ENGINEER
PIERCE COUNTY ORDINANCE NUMBER 2021-45

1. CONTACT Dennis Peterson THE AREA INSPECTOR, AT 253-798- 2539 TO COORDINATE THE PRE-CONSTRUCTION MEETING AND COUNTY INSPECTIONS. PRE-CONSTRUCTION MEETING SHALL BE REQUESTED AT LEAST 48-HOURS IN ADVANCE OF THE START OF CONSTRUCTION.
2. APPOINT A CERTIFIED EROSION AND SEDIMENT CONTROL LEAD WHO SHALL BE PROVIDED A COPY OF THE SWPPP, EROSION CONTROL PLAN & INSPECTION SCHEDULE.
3. FAILURE TO OBTAIN REQUIRED INSPECTIONS MAY ENDANGER OR DELAY PROJECT APPROVAL.
4. ALL WORK IN THE PUBLIC RIGHT-OF-WAY REQUIRES A GENERAL RIGHT-OF-WAY PERMIT FROM PIERCE COUNTY PLANNING AND PUBLIC WORKS.

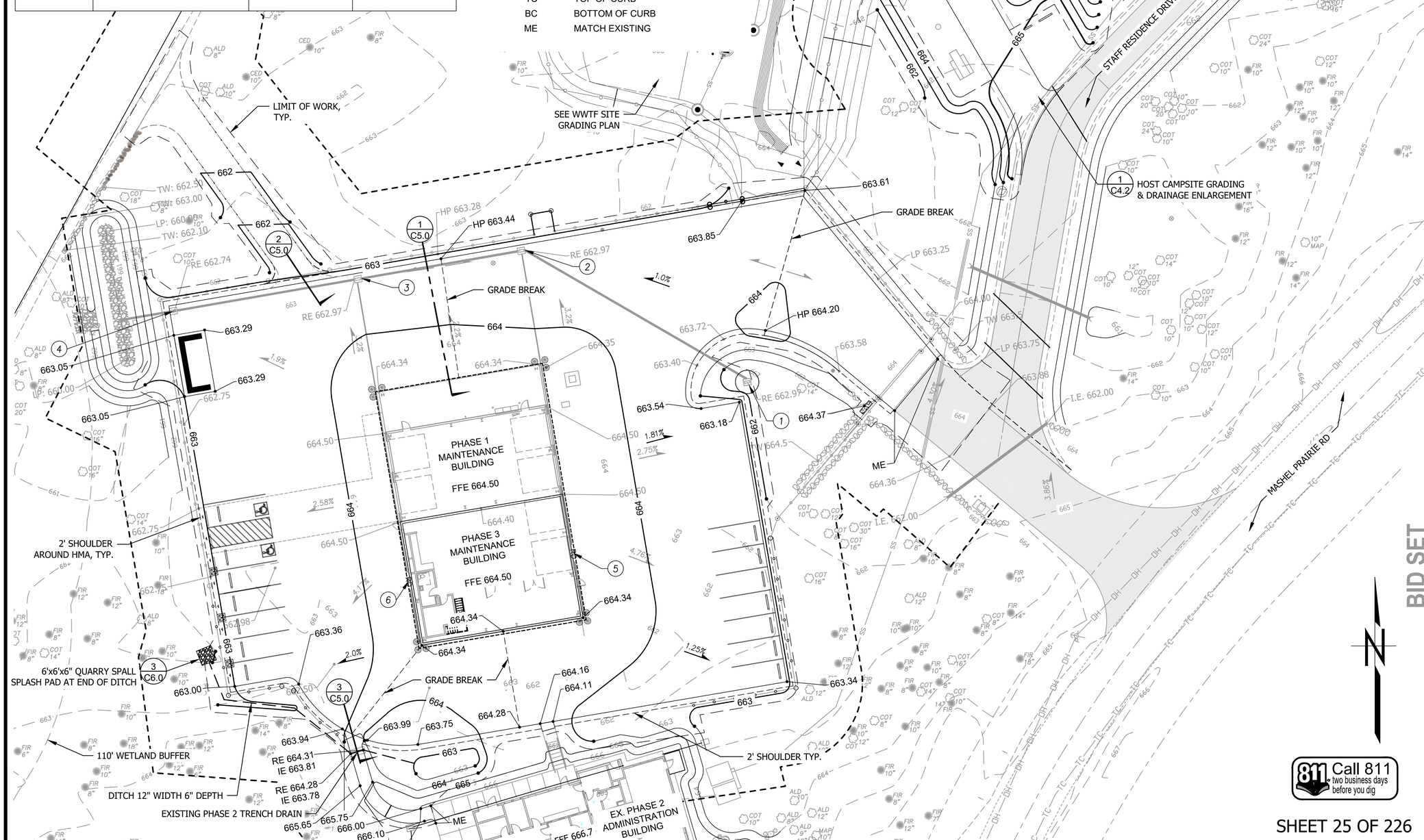

SHEET 25 OF 226

BID SET

CAD NO.

NO.	REVISIONS	INT.	APP.	DATE

ACTION	BY	DATE
DESIGNED		
DRAWN		
CHECKED (FIELD)		
CHECKED (HDQTS.)		

STATE OF WASHINGTON · JONAH HAYES · No. 24012382 EXP. 05/16/2026 · LICENSED LANDSCAPE ARCHITECT

REGISTERED STAMP

WASHINGTON STATE PARKS AND RECREATION COMMISSION

NISQUALLY STATE PARK

PHASE 3A MAINTENANCE BUILDING AND WWTF

GRADING & DRAINAGE PLAN - MAINT. BLDG.

A-C4.1

SCALE
SCALE: 1"=20'
0' 10' 20' 30' 40'

PARKS FILE#

G:\2018\180624 New Full Service Park Design Services\Drawings\Sheets\Phase 3\Bid Set 1 Maint, Pump, WWTF, Utility\A-C4.1-4.2 Grading Plan.dwg
Feb-25-25 3:21pm

GRADING LEGEND:

XXX	PROPOSED INTERMEDIATE CONTOUR
XXX	PROPOSED INDEX CONTOUR
	GRADE BREAK
	LIMIT OF WORK
	DIRECTION OF SLOPE
662.3	FINISH GRADE ELEVATION
FFE	FINISH FLOOR ELEVATION
HP	HIGH POINT (CRUSHED SURFACING)
LP	LOW POINT (CRUSHED SURFACING)
RE	RIM ELEVATION
IE	INVERT ELEVATION
TW	TOP OF WALL +/-
TC	TOP OF CURB
BC	BOTTOM OF CURB
ME	MATCH EXISTING

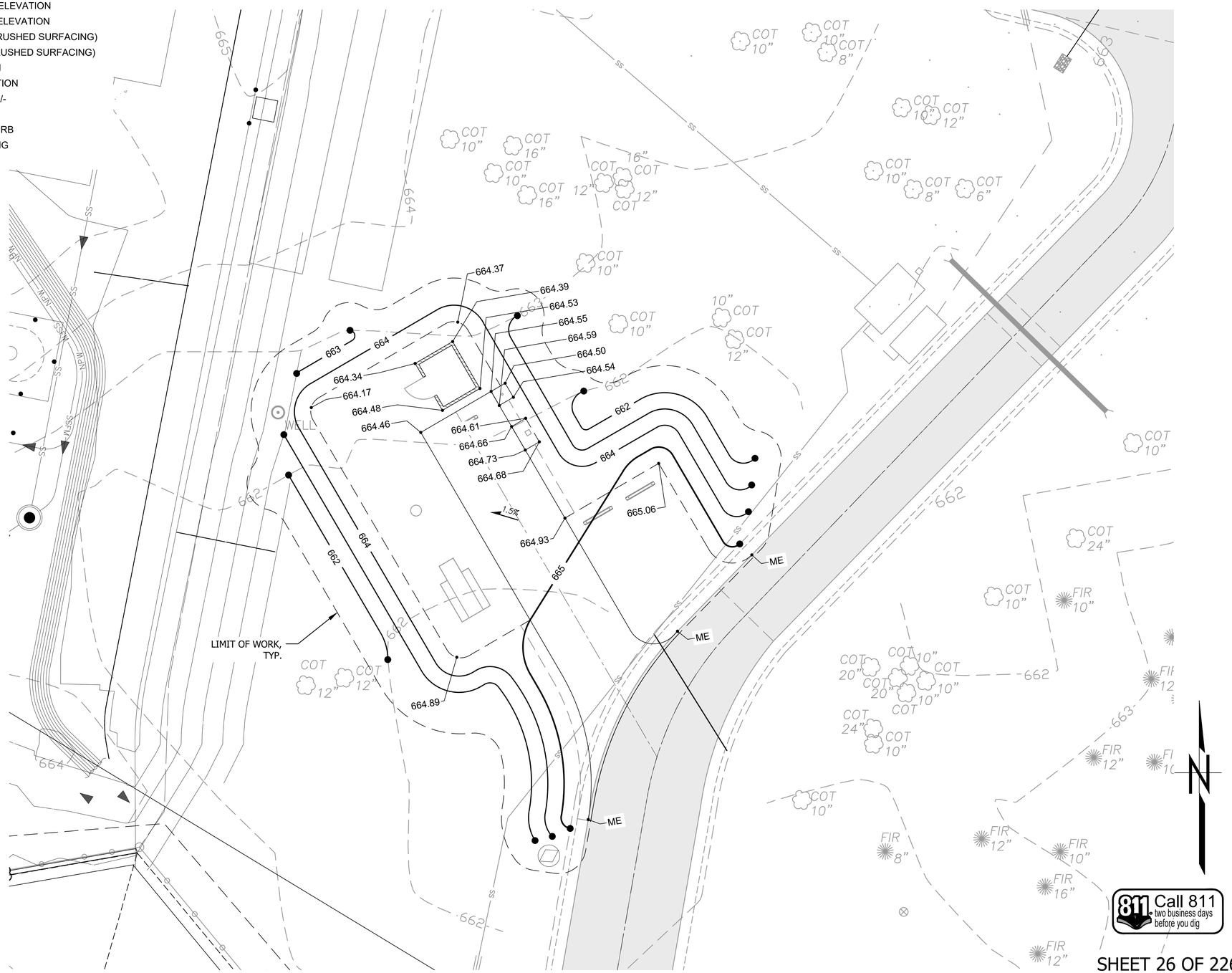

PRIVATE IMPROVEMENTS

PERMIT # 1001191

DATE 01-05-2023

DEVELOPMENT ENGINEER

PIERCE COUNTY ORDINANCE NUMBER 2021-45

1. CONTACT Dennis Peterson THE AREA INSPECTOR, AT 253-798- 2539 TO COORDINATE THE PRE-CONSTRUCTION MEETING AND COUNTY INSPECTIONS. PRE-CONSTRUCTION MEETING SHALL BE REQUESTED AT LEAST 48-HOURS IN ADVANCE OF THE START OF CONSTRUCTION.
2. APPOINT A CERTIFIED EROSION AND SEDIMENT CONTROL LEAD WHO SHALL BE PROVIDED A COPY OF THE SWPPP, EROSION CONTROL PLAN & INSPECTION SCHEDULE.
3. FAILURE TO OBTAIN REQUIRED INSPECTIONS MAY ENDANGER OR DELAY PROJECT APPROVAL.
4. ALL WORK IN THE PUBLIC RIGHT-OF-WAY REQUIRES A GENERAL RIGHT-OF-WAY PERMIT FROM PIERCE COUNTY PLANNING AND PUBLIC WORKS.

CAD NO.

NO.	REVISIONS	INT.	APP.	DATE

ACTION	BY	DATE
DESIGNED		
DRAWN		
CHECKED (FIELD)		
CHECKED (HDQTS.)		

STATE OF WASHINGTON · JONAH HAYES · No. 24012382 · EXP. 06/16/2026 · LICENSED LANDSCAPE ARCHITECT

REGISTERED STAMP

WASHINGTON STATE PARKS AND RECREATION COMMISSION

NISQUALLY STATE PARK

PHASE 3A MAINTENANCE BUILDING AND WWTF

GRADING & DRAINAGE PLAN - HOST CAMPSITE A-C4.2

BID SET

Call 811 two business days before you dig

SCALE: 1"=20'

0' 10' 20' 30' 40'

PARKS FILE#

SHEET 26 OF 226

G:\2018\180624 New Full Service Park Design Services\Drawings\Sheets\Phase 3\Bid Set 1 Maint, Pump, WWTF, Utility\A-C4.1-4.2 Grading Plan.dwg
Jun-08-25 9:44am

PRIVATE IMPROVEMENTS

1001191
PERMIT #

01-05-2023
DATE

DEVELOPMENT ENGINEER

PIERCE COUNTY ORDINANCE NUMBER 2021-45

1. CONTACT Dennis Peterson THE AREA INSPECTOR, AT 253-798- 2539 TO COORDINATE THE PRE-CONSTRUCTION MEETING AND COUNTY INSPECTIONS. PRE-CONSTRUCTION MEETING SHALL BE REQUESTED AT LEAST 48-HOURS IN ADVANCE OF THE START OF CONSTRUCTION.
2. APPOINT A CERTIFIED EROSION AND SEDIMENT CONTROL LEAD WHO SHALL BE PROVIDED A COPY OF THE SWPPP, EROSION CONTROL PLAN & INSPECTION SCHEDULE.
3. FAILURE TO OBTAIN REQUIRED INSPECTIONS MAY ENDANGER OR DELAY PROJECT APPROVAL.
4. ALL WORK IN THE PUBLIC RIGHT-OF-WAY REQUIRES A GENERAL RIGHT-OF-WAY PERMIT FROM PIERCE COUNTY PLANNING AND PUBLIC WORKS.

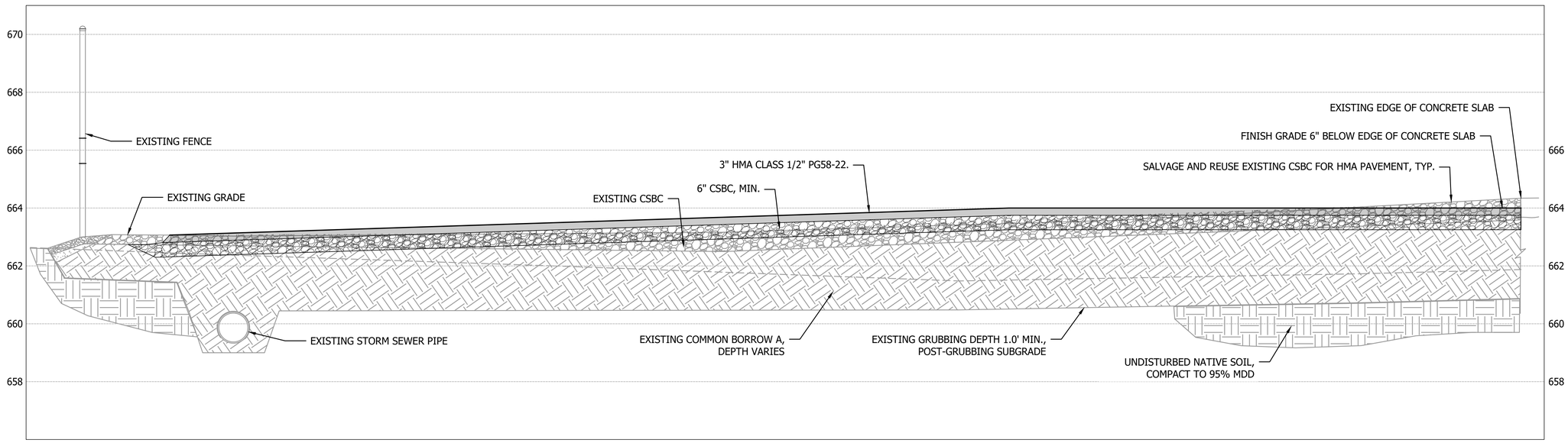

1 C5.0 SECTION A
SCALE:1/2"= 1'-0"

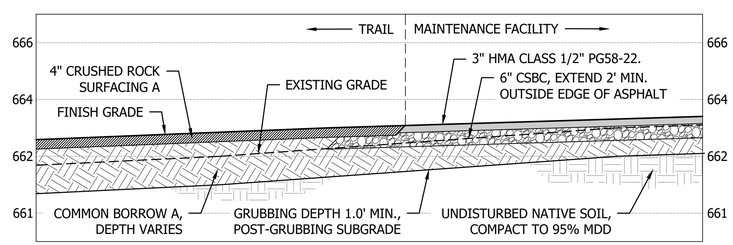

2 C5.0 SECTION B
SCALE:3/8"= 1'-0"

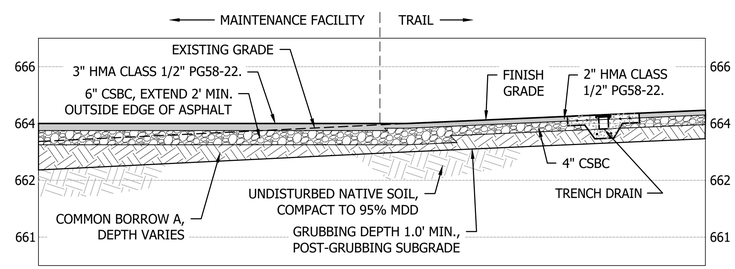

3 C5.0 SECTION C
SCALE:3/8"= 1'-0"

Call 811 two business days before you dig

SHEET 27 OF 226

BID SET

CAD NO.

NO.	REVISIONS	INT.	APP.	DATE

ACTION	BY	DATE
DESIGNED		
DRAWN		
CHECKED (FIELD)		
CHECKED (HDQTS.)		

STATE OF WASHINGTON
JONAH HAYES
No. 20012382 EXP. 05/16/2026
LICENSED LANDSCAPE ARCHITECT

REGISTERED STAMP

WASHINGTON STATE PARKS AND RECREATION COMMISSION

NISQUALLY STATE PARK

PHASE 3A MAINTENANCE BUILDING AND WWTF

CROSS SECTIONS

A-C5.0

SCALE
SCALE: 1"=20'
0' 10' 20' 30' 40'

PARKS FILE#

G:\2018\180620 New Full Service Park Design Services\Drawings\Sheets\Phase 3\Bid Set 1 Maint, Pump, WWTF, Utility\C5.0-Cross Sections - Maint.dwg
Jan-08-25 9:44am

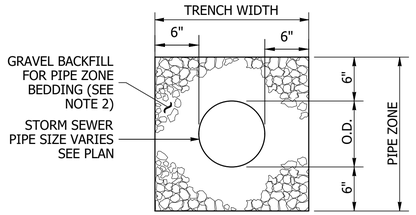

NOTES

1. SEE **STANDARD SPECIFICATIONS SECTION 7-08.3(3)** FOR PIPE ZONE BACKFILL.
2. SEE **STANDARD SPECIFICATIONS SECTION 9-03.12(3)** FOR GRAVEL BACKFILL FOR PIPE ZONE BEDDING.

1 C6.0 PIPE ZONE BEDDING AND BACKFILL

SCALE: NTS

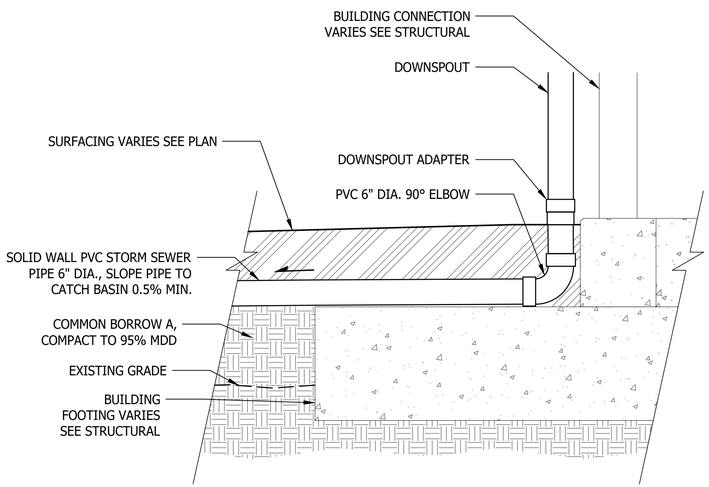

2 C6.0 DOWNSPOUT CONNECTION

SCALE: 1" = 1'-0"

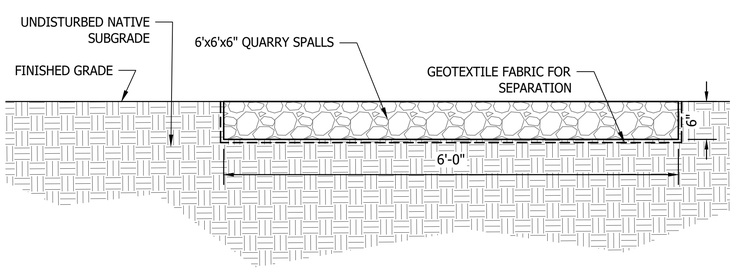

3 C6.0 6'x6'x6" QUARRY SPALL SPLASH PAD

SCALE: 1" = 1'-0"

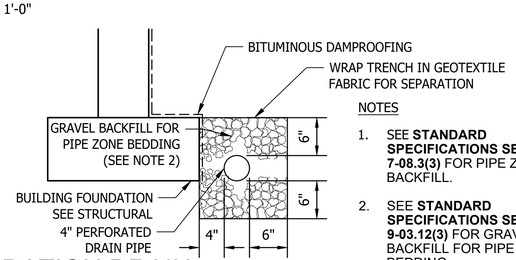

NOTES

1. SEE **STANDARD SPECIFICATIONS SECTION 7-08.3(3)** FOR PIPE ZONE BACKFILL.
2. SEE **STANDARD SPECIFICATIONS SECTION 9-03.12(3)** FOR GRAVEL BACKFILL FOR PIPE ZONE BEDDING.

5 C6.0 FOUNDATION DRAIN

SCALE: 1" = 1'-0"

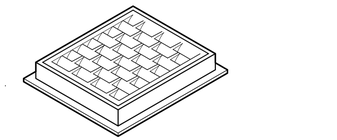

FRAME AND VANED GRATE OR RECTANGULAR SOLID CAST IRON COVER

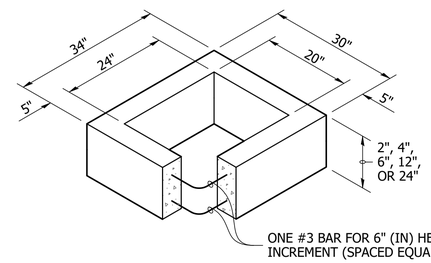

RECTANGULAR ADJUSTMENT SECTION

PIPE ALLOWANCES	
PIPE MATERIAL	MAXIMUM INSIDE DIAMETER (INCHES)
REINFORCED OR PLAIN CONCRETE	12"
ALL METAL PIPE	15"
CPSSP * (STD. SPEC. SECT. 9-05.20)	12"
SOLID WALL PVC (STD. SPEC. SECT. 9-05.12(1))	15"
PROFILE WALL PVC (STD. SPEC. SECT. 9-05.12(2))	15"

* CORRUGATED POLYETHYLENE STORM SEWER PIPE

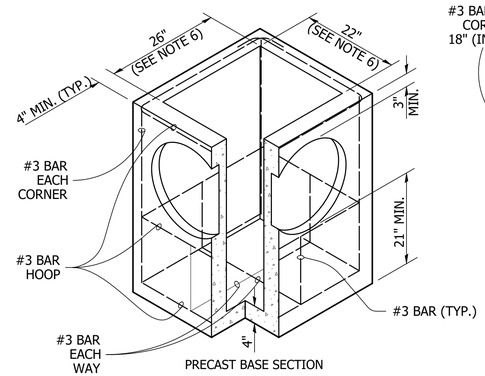

PRECAST BASE SECTION

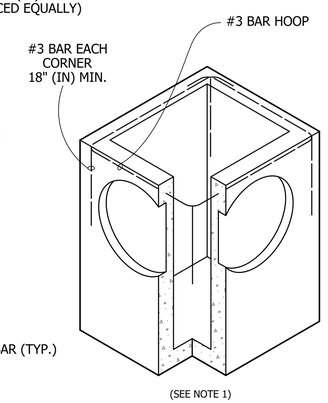

ALTERNATIVE PRECAST BASE SECTION

NOTES

1. AS ACCEPTABLE ALTERNATIVES TO THE REBAR SHOWN IN THE **PRECAST BASE SECTION**, FIBERS (PLACED ACCORDING TO THE STANDARD SPECIFICATIONS), OR WIRE MESH HAVING A MINIMUM AREA OF 0.12 SQUARE INCHES PER FOOT SHALL BE USED WITH THE MINIMUM REQUIRED REBAR SHOWN IN THE **ALTERNATIVE PRECAST BASE SECTION**. WIRE MESH SHALL NOT BE PLACED IN THE KNOCKOUTS.
2. THE KNOCKOUT DIAMETER SHALL NOT BE GREATER THAN 20" (IN). KNOCKOUTS SHALL HAVE A WALL THICKNESS OF 2" (IN) MINIMUM TO 2.5" (IN) MAXIMUM. PROVIDE A 1.5" (IN) MINIMUM GAP BETWEEN THE KNOCKOUT WALL AND THE OUTSIDE OF THE PIPE. AFTER THE PIPE IS INSTALLED, FILL THE GAP WITH JOINT MORTAR IN ACCORDANCE WITH **STANDARD SPECIFICATION SECTION 9-04.3**.
3. THE MAXIMUM DEPTH FROM THE FINISHED GRADE TO THE LOWEST PIPE INVERT SHALL BE 5' (FT).
4. THE FRAME AND GRATE MAY BE INSTALLED WITH THE FLANGE DOWN, OR INTEGRALLY CAST INTO THE ADJUSTMENT SECTION WITH FLANGE UP.
5. THE PRECAST BASE SECTION MAY HAVE A ROUNDED FLOOR, AND THE WALLS MAY BE SLOPED AT A RATE OF 1 : 24 OR STEEPER.
6. THE OPENING SHALL BE MEASURED AT THE TOP OF THE **PRECAST BASE SECTION**.
7. ALL PICKUP HOLES SHALL BE GROUTED FULL AFTER THE BASIN HAS BEEN PLACED.

4 C6.0 CATCH BASIN TYPE 1

SCALE: NTS

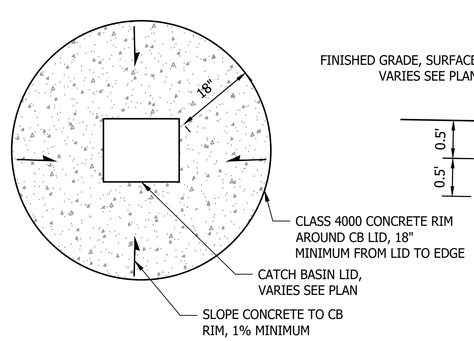

PLAN

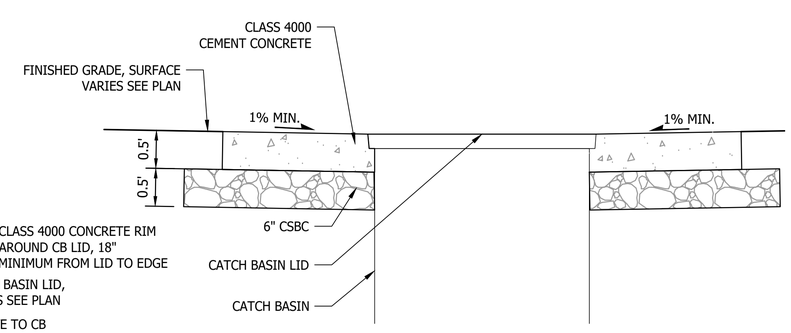

SECTION

6 C6.0 CONCRETE RING AT CATCH BASIN

SCALE: 1 = 1'-0"

BID SET

PRIVATE IMPROVEMENTS

1001191 PERMIT #

01-05-2023 DATE

DEVELOPMENT ENGINEER

PIERCE COUNTY ORDINANCE NUMBER 2021-45

1. CONTACT Dennis Peterson THE AREA INSPECTOR, AT 253-798- 2539 TO COORDINATE THE PRE-CONSTRUCTION MEETING AND COUNTY INSPECTIONS. PRE-CONSTRUCTION MEETING SHALL BE REQUESTED AT LEAST 48-HOURS IN ADVANCE OF THE START OF CONSTRUCTION.
2. APPOINT A CERTIFIED EROSION AND SEDIMENT CONTROL LEAD WHO SHALL BE PROVIDED A COPY OF THE SWPPP, EROSION CONTROL PLAN & INSPECTION SCHEDULE.
3. FAILURE TO OBTAIN REQUIRED INSPECTIONS MAY ENDANGER OR DELAY PROJECT APPROVAL.
4. ALL WORK IN THE PUBLIC RIGHT-OF-WAY REQUIRES A GENERAL RIGHT-OF-WAY PERMIT FROM PIERCE COUNTY PLANNING AND PUBLIC WORKS.

CAD NO.

NO.	REVISIONS	INT.	APP.	DATE

ACTION	BY	DATE
DESIGNED		
DRAWN		
CHECKED (FIELD)		
CHECKED (HDQTS.)		

STATE OF WASHINGTON · JONAH HAYES · No. 2401236 2 Exp. 05/16/2026 · LICENSED LANDSCAPE ARCHITECT

REGISTERED STAMP

WASHINGTON STATE PARKS AND RECREATION COMMISSION

NISQUALLY STATE PARK

PHASE 3A MAINTENANCE BUILDING AND WWTF

DRAINAGE DETAILS

A-C6.0

SCALE

AS SHOWN

PARKS FILE#

PRIVATE IMPROVEMENTS

1001191
PERMIT #

01-05-2023
DATE

DEVELOPMENT ENGINEER

PIERCE COUNTY ORDINANCE NUMBER 2021-45

1. CONTACT Dennis Peterson THE AREA INSPECTOR, AT 253-798- 2539 TO COORDINATE THE PRE-CONSTRUCTION MEETING AND COUNTY INSPECTIONS. PRE-CONSTRUCTION MEETING SHALL BE REQUESTED AT LEAST 48-HOURS IN ADVANCE OF THE START OF CONSTRUCTION.
2. APPOINT A CERTIFIED EROSION AND SEDIMENT CONTROL LEAD WHO SHALL BE PROVIDED A COPY OF THE SWPPP, EROSION CONTROL PLAN & INSPECTION SCHEDULE.
3. FAILURE TO OBTAIN REQUIRED INSPECTIONS MAY ENDANGER OR DELAY PROJECT APPROVAL.
4. ALL WORK IN THE PUBLIC RIGHT-OF-WAY REQUIRES A GENERAL RIGHT-OF-WAY PERMIT FROM PIERCE COUNTY PLANNING AND PUBLIC WORKS.

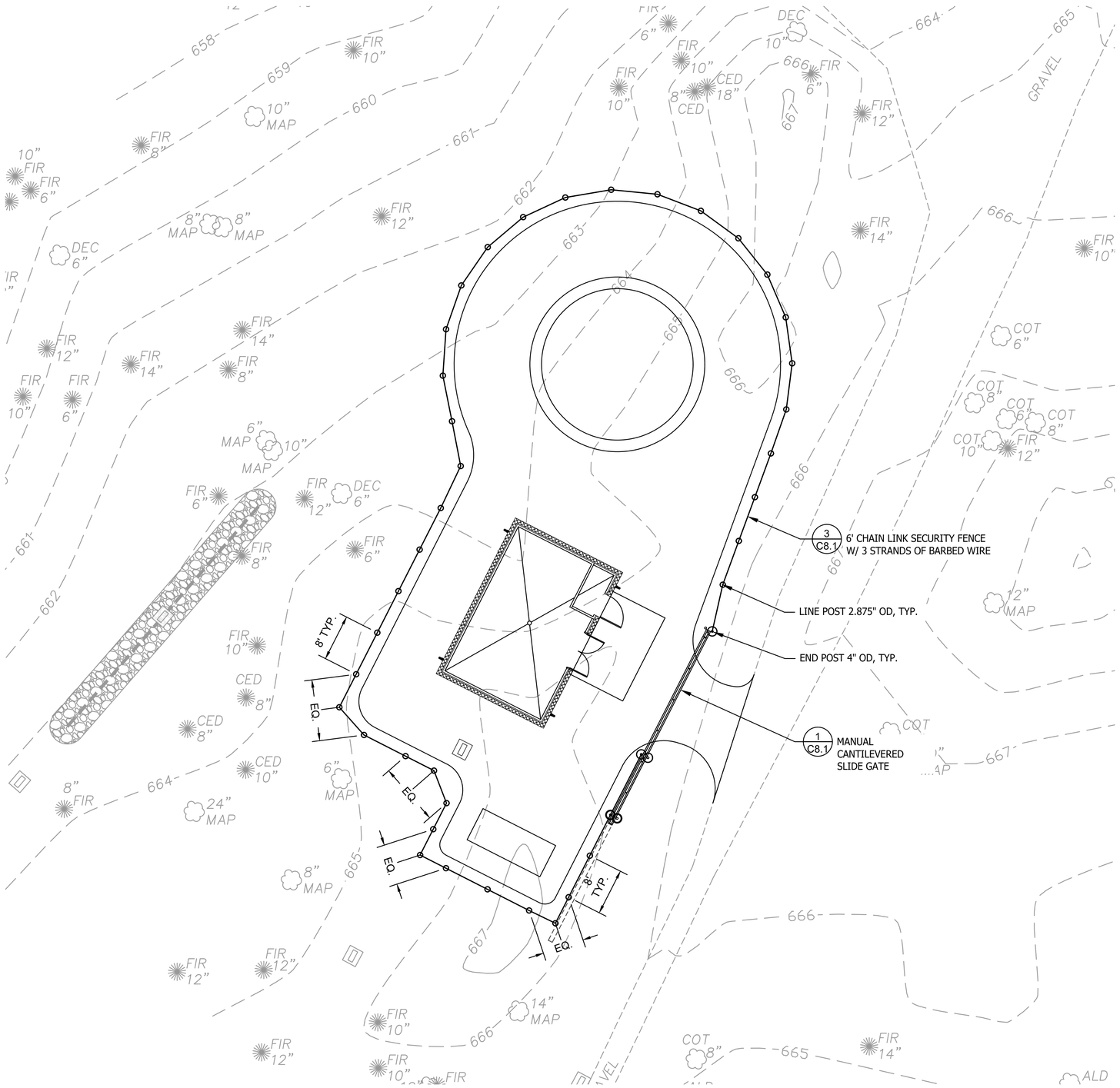

FENCE & GATE SCHEDULE

SYMBOL	DESCRIPTION	QTY	DETAIL
	6' CHAIN LINK SECURITY FENCE W/ 3 STRANDS OF BARBED WIRE	300 LF	2/C8.2
	MANUAL CANTILEVER SLIDE GATE		1/C8.1

NOTE:
1. 6' SECURITY FENCE TO HAVE 4"OD END AND TERMINAL POSTS, LINE POSTS TO BE 2.875"
2. THE PROPERTY OWNER IS RESPONSIBLE FOR MAINTAINING THE RAPID ENTRY DEVICES IN AN OPERABLE CONDITION.
3. PRIOR TO REQUESTING A FINAL INSPECTION FROM THE DEVELOPMENT ENGINEERING SECTION THE APPLICANT SHALL SUBMIT A COPY OF THE COMPLETED GATE OPERATION TEST FORM.

BID SET

Call 811 two business days before you dig

SHEET 29 OF 226

CAD NO.

NO.	REVISIONS	INT.	APP.	DATE

ACTION	BY	DATE
DESIGNED		
DRAWN		
CHECKED (FIELD)		
CHECKED (HDQTS.)		

STATE OF WASHINGTON · JONAH HAYES · No. 24012382 EXP 05/16/2026 · LICENSED LANDSCAPE ARCHITECT

REGISTERED STAMP

WASHINGTON STATE PARKS AND RECREATION COMMISSION

NISQUALLY STATE PARK

PHASE 3A MAINTENANCE BUILDING AND WWTF FENCE & GATE PLAN - PUMP HOUSE A-C7.0

SCALE

SCALE: 1"=10'

0 5' 10' 15' 20'

PARKS FILE#

O:\2018\180924 New Full Service Park Design Services\Drawings\Sheets\Phase 3\Bid Set 1 Maint, Pump, WWTF, Utility\A-C7.0-7.1,B-C4.0,C4.1 Fence & Gate Plan.dwg
Jan-06-25 9:46am

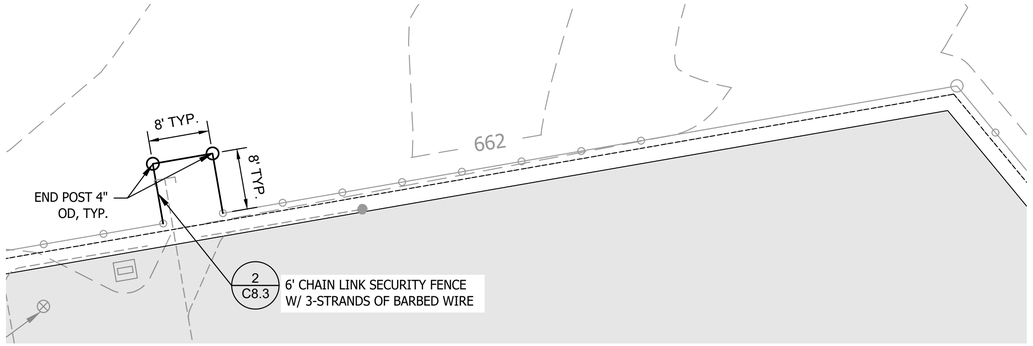

1 C7.1 NORTH FENCE ENLARGEMENT

SCALE: 1"=10'-0"

NOTE:
1. 6' SECURITY FENCE TO HAVE 4"OD END AND TERMINAL POSTS, LINE POSTS TO BE 2.875"
2. SECURE PERMANENT FENCING TO 6' SECURITY FENCE W/ 5 WIRE TIES AT EQUAL SPACING.
3. THE PROPERTY OWNER IS RESPONSIBLE FOR MAINTAINING THE RAPID ENTRY DEVICES AT GATE IN AN OPERABLE CONDITION.
4. PRIOR TO REQUESTING A FINAL INSPECTION FROM THE DEVELOPMENT ENGINEERING SECTION THE APPLICANT SHALL SUBMIT A COPY OF THE COMPLETED GATE OPERATION TEST FORM.

FENCE SCHEDULE

SYMBOL	DESCRIPTION	QTY	DETAIL
	6` CHAIN LINK SECURITY FENCE W/ 3 STRANDS OF BARBED WIRE	215 LF	2/C8.2
	MANUAL CANTILEVER SLIDE GATE		1/C8.1

PRIVATE IMPROVEMENTS

1001191
PERMIT #

01-05-2023
DATE

DEVELOPMENT ENGINEER
PIERCE COUNTY ORDINANCE NUMBER 2021-45

1. CONTACT Dennis Peterson THE AREA INSPECTOR, AT 253-798- 2539 TO COORDINATE THE PRE-CONSTRUCTION MEETING AND COUNTY INSPECTIONS. PRE-CONSTRUCTION MEETING SHALL BE REQUESTED AT LEAST 48-HOURS IN ADVANCE OF THE START OF CONSTRUCTION.
2. APPOINT A CERTIFIED EROSION AND SEDIMENT CONTROL LEAD WHO SHALL BE PROVIDED A COPY OF THE SWPPP, EROSION CONTROL PLAN & INSPECTION SCHEDULE.
3. FAILURE TO OBTAIN REQUIRED INSPECTIONS MAY ENDANGER OR DELAY PROJECT APPROVAL.
4. ALL WORK IN THE PUBLIC RIGHT-OF-WAY REQUIRES A GENERAL RIGHT-OF-WAY PERMIT FROM PIERCE COUNTY PLANNING AND PUBLIC WORKS.

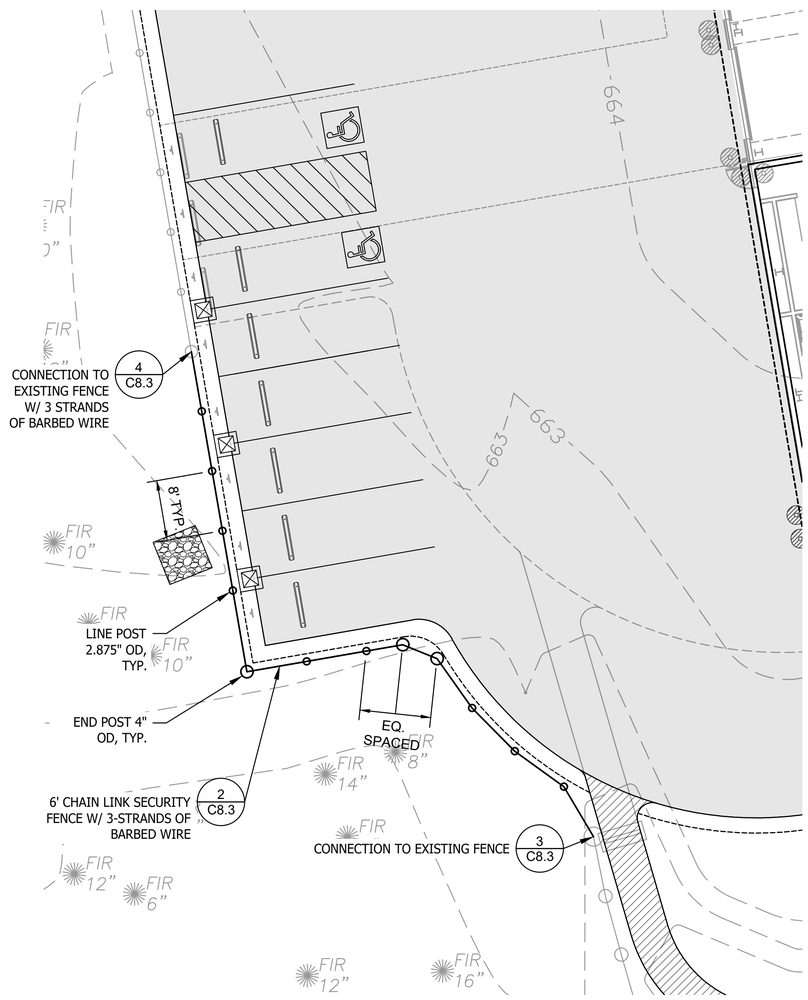

2 C7.1 WEST FENCING ENLARGEMENT

SCALE: 1"=10'-0"

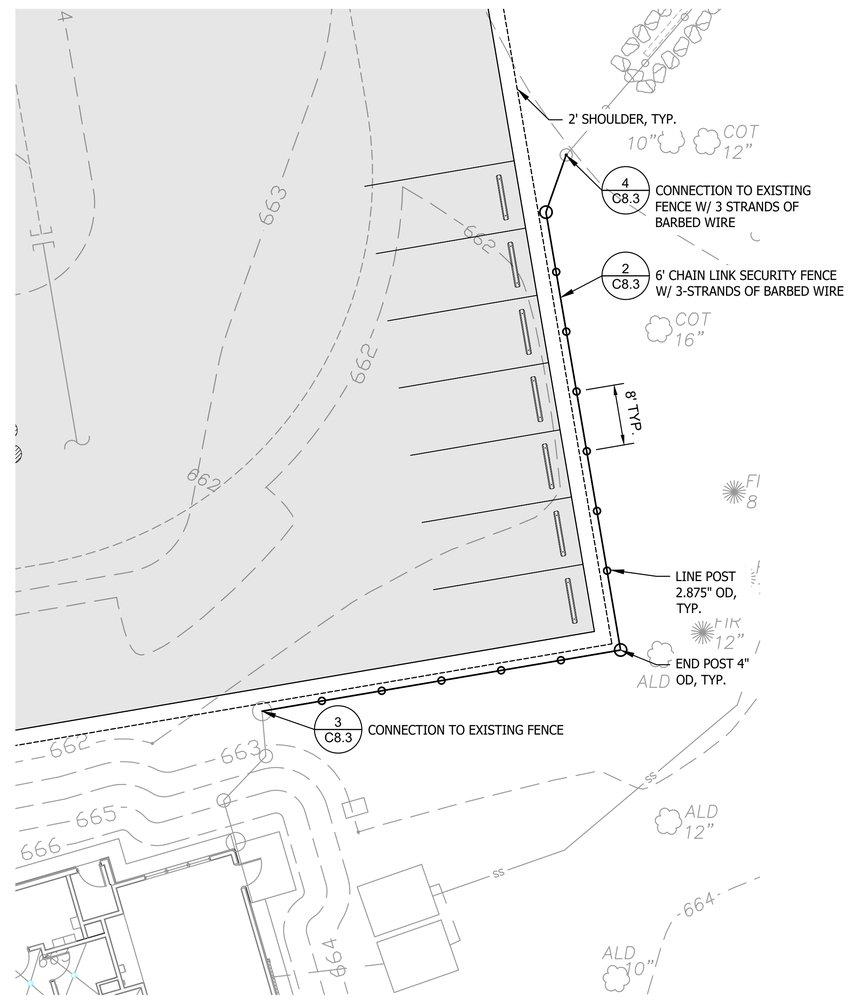

3 C7.1 EAST FENCING ENLARGEMENT

SCALE: 1"=10'-0"

BID SET

Call 811 two business days before you dig

SHEET 30 OF 226

CAD NO.

NO.	REVISIONS	INT.	APP.	DATE

ACTION	BY	DATE
DESIGNED		
DRAWN		
CHECKED (FIELD)		
CHECKED (HDQTS.)		

STATE OF WASHINGTON
JONAH HAYES
No. 24012362 EXP. 05/16/2026
LICENSED LANDSCAPE ARCHITECT

REGISTERED STAMP

WASHINGTON STATE PARKS AND RECREATION COMMISSION

NISQUALLY STATE PARK

PHASE 3A MAINTENANCE BUILDING AND WWTF FENCE & GATE PLAN - MAINT. BLDG.
A-C7.1

SCALE
SCALE: 1"=20'
0' 10' 20' 30' 40'

PARKS FILE#

O:\2018\18062A New Full Service Park Design Services\Drawings\Sheets\Phase 3\Bid Set 1 Maint, Pump, WWTF, Utility\A-C7.0-7.1,B-C4.0,C4.1 Fence & Gate Plan.dwg
Feb-25-25 3:28pm

PRIVATE IMPROVEMENTS

1001191
PERMIT #

01-05-2023
DATE

DEVELOPMENT ENGINEER

PIERCE COUNTY ORDINANCE NUMBER 2021-45

1. CONTACT Dennis Peterson THE AREA INSPECTOR, AT 253-798- 2539 TO COORDINATE THE PRE-CONSTRUCTION MEETING AND COUNTY INSPECTIONS. PRE-CONSTRUCTION MEETING SHALL BE REQUESTED AT LEAST 48-HOURS IN ADVANCE OF THE START OF CONSTRUCTION.
2. APPOINT A CERTIFIED EROSION AND SEDIMENT CONTROL LEAD WHO SHALL BE PROVIDED A COPY OF THE SWPPP, EROSION CONTROL PLAN & INSPECTION SCHEDULE.
3. FAILURE TO OBTAIN REQUIRED INSPECTIONS MAY ENDANGER OR DELAY PROJECT APPROVAL.
4. ALL WORK IN THE PUBLIC RIGHT-OF-WAY REQUIRES A GENERAL RIGHT-OF-WAY PERMIT FROM PIERCE COUNTY PLANNING AND PUBLIC WORKS.

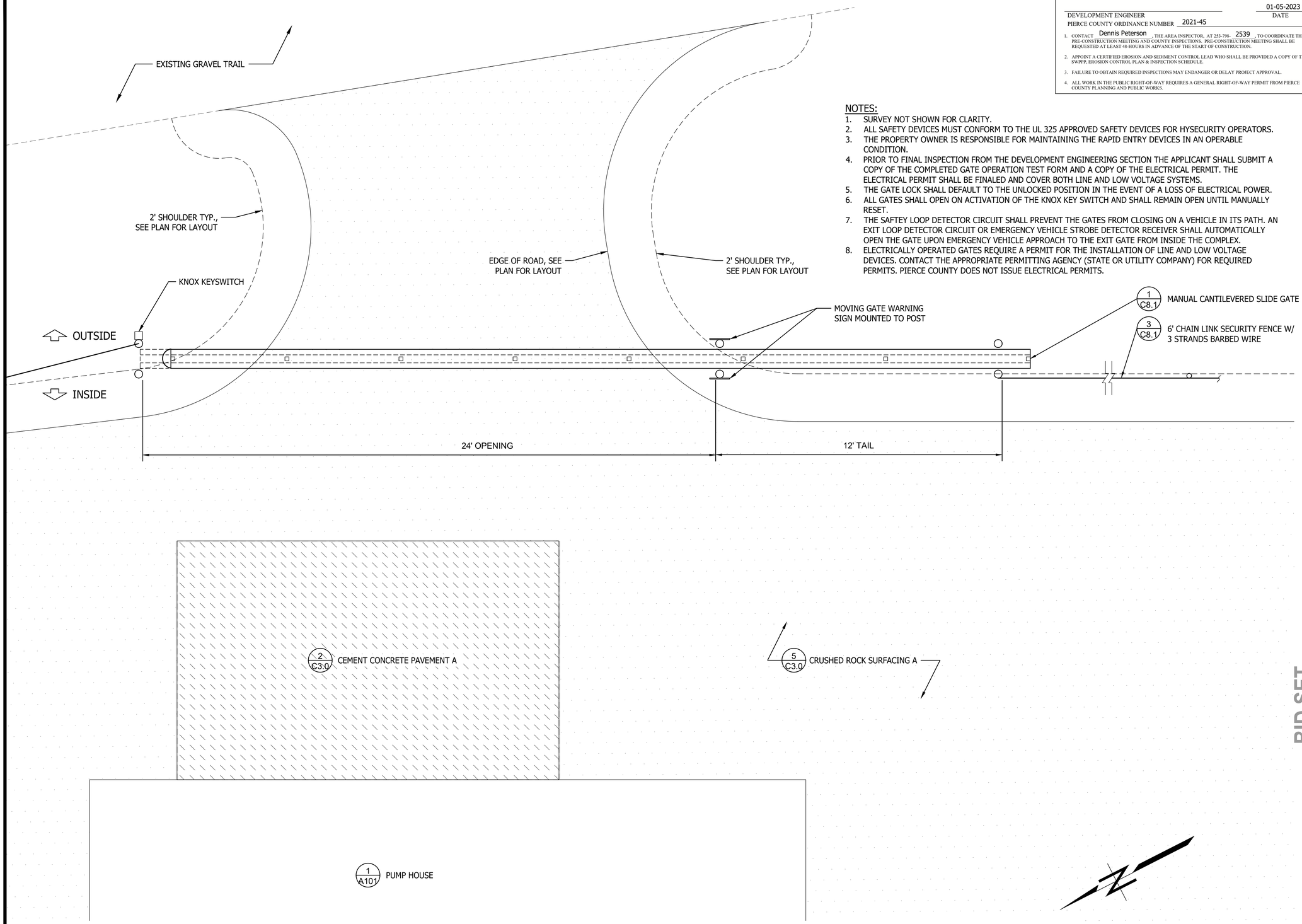

NOTES:

1. SURVEY NOT SHOWN FOR CLARITY.
2. ALL SAFETY DEVICES MUST CONFORM TO THE UL 325 APPROVED SAFETY DEVICES FOR HYSECURITY OPERATORS.
3. THE PROPERTY OWNER IS RESPONSIBLE FOR MAINTAINING THE RAPID ENTRY DEVICES IN AN OPERABLE CONDITION.
4. PRIOR TO FINAL INSPECTION FROM THE DEVELOPMENT ENGINEERING SECTION THE APPLICANT SHALL SUBMIT A COPY OF THE COMPLETED GATE OPERATION TEST FORM AND A COPY OF THE ELECTRICAL PERMIT. THE ELECTRICAL PERMIT SHALL BE FINALED AND COVER BOTH LINE AND LOW VOLTAGE SYSTEMS.
5. THE GATE LOCK SHALL DEFAULT TO THE UNLOCKED POSITION IN THE EVENT OF A LOSS OF ELECTRICAL POWER.
6. ALL GATES SHALL OPEN ON ACTIVATION OF THE KNOX KEY SWITCH AND SHALL REMAIN OPEN UNTIL MANUALLY RESET.
7. THE SAFTEY LOOP DETECTOR CIRCUIT SHALL PREVENT THE GATES FROM CLOSING ON A VEHICLE IN ITS PATH. AN EXIT LOOP DETECTOR CIRCUIT OR EMERGENCY VEHICLE STROBE DETECTOR RECEIVER SHALL AUTOMATICALLY OPEN THE GATE UPON EMERGENCY VEHICLE APPROACH TO THE EXIT GATE FROM INSIDE THE COMPLEX.
8. ELECTRICALLY OPERATED GATES REQUIRE A PERMIT FOR THE INSTALLATION OF LINE AND LOW VOLTAGE DEVICES. CONTACT THE APPROPRIATE PERMITTING AGENCY (STATE OR UTILITY COMPANY) FOR REQUIRED PERMITS. PIERCE COUNTY DOES NOT ISSUE ELECTRICAL PERMITS.

1 C8.0 *PUMP HOUSE CANTILEVERED SLIDE GATE LAYOUT*
SCALE: NOT TO SCALE

BID SET

SHEET 31 OF 226

CAD NO.

NO.	REVISIONS	INT.	APP.	DATE

ACTION	BY	DATE
DESIGNED		
DRAWN		
CHECKED (FIELD)		
CHECKED (HDQTS.)		

STATE OF WASHINGTON
JONAH HAYES
No. 24012362 Exp. 09/16/2026
LICENSED LANDSCAPE ARCHITECT

REGISTERED STAMP

WASHINGTON STATE PARKS AND RECREATION COMMISSION

NISQUALLY STATE PARK

PHASE 3A MAINTENANCE BUILDING AND WWTF

GATE LAYOUT - PUMP HOUSE A-C8.0

SCALE
AS SHOWN

PARKS FILE#

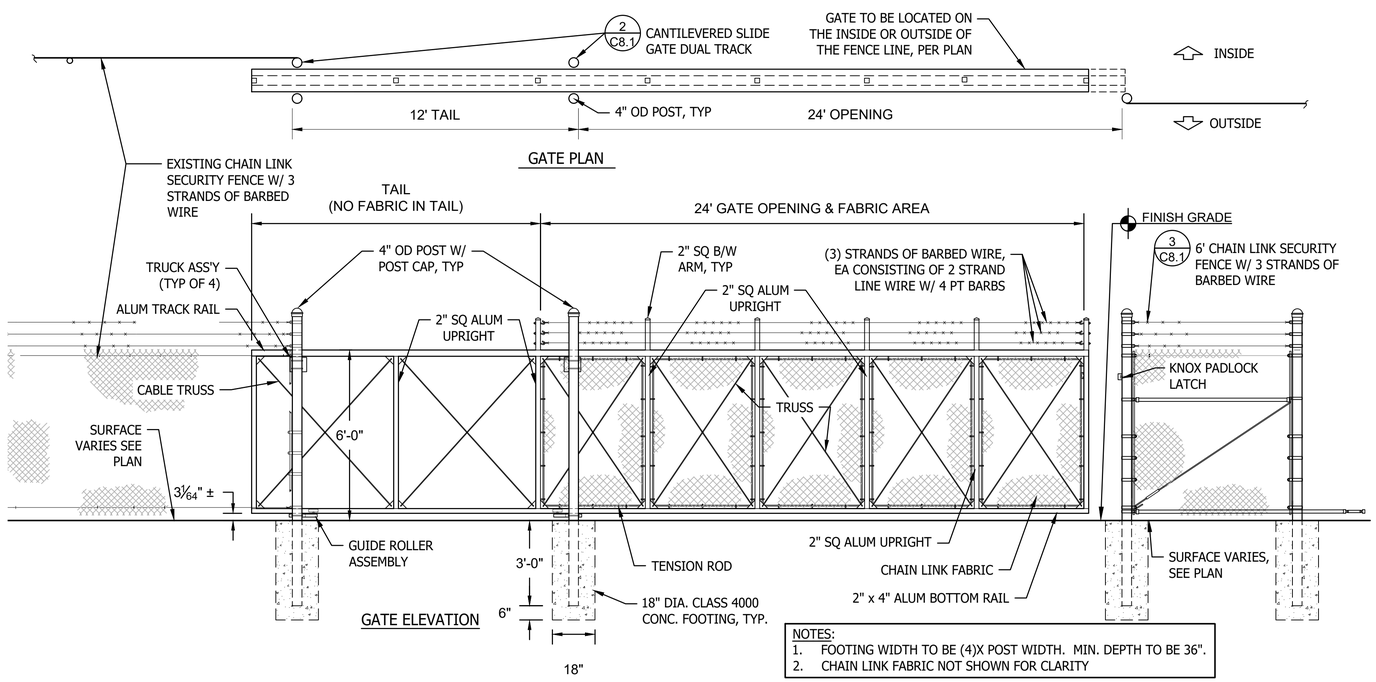

NOTES:
1. FOOTING WIDTH TO BE (4)X POST WIDTH. MIN. DEPTH TO BE 36".
2. CHAIN LINK FABRIC NOT SHOWN FOR CLARITY

1 C8.1 MANUAL CANTILEVERED SLIDE GATE

SCALE: NOT TO SCALE

NOTE:
CHAIN LINK FABRIC & 3 STRAND BARBED WIRE NOT SHOWN FOR CLARITY.

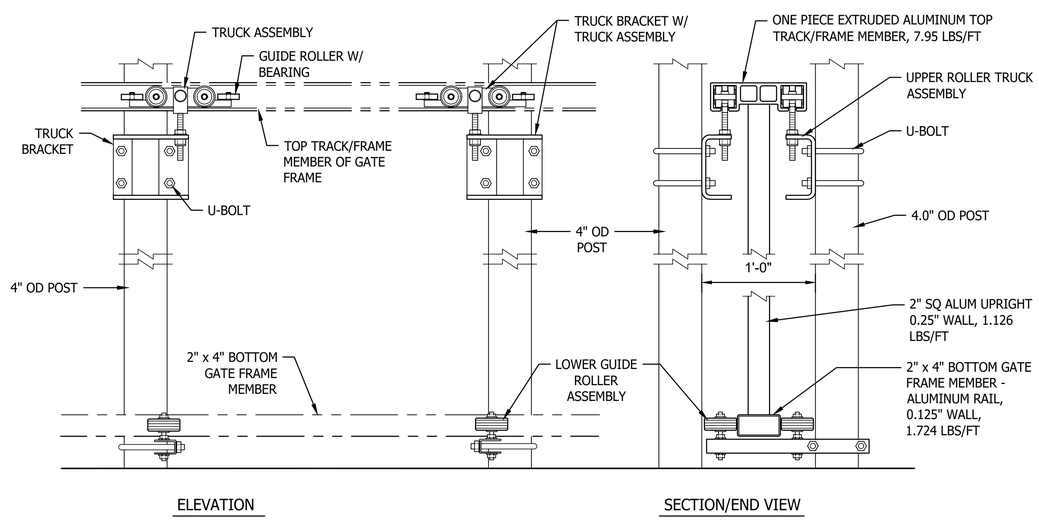

2 C8.1 CANTILEVERED SLIDE GATE DUAL TRACK

NOT TO SCALE

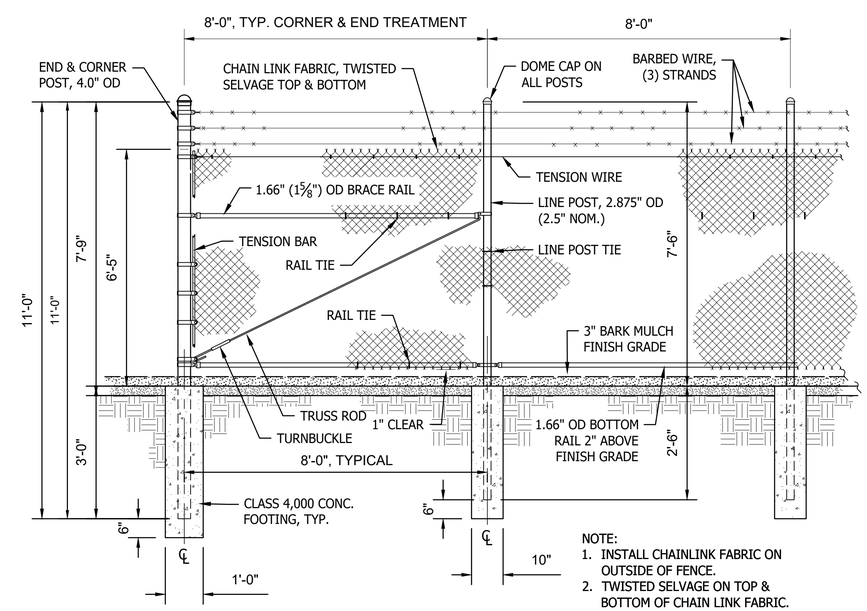

NOTE:
1. INSTALL CHAINLINK FABRIC ON OUTSIDE OF FENCE.
2. TWISTED SELVAGE ON TOP & BOTTOM OF CHAIN LINK FABRIC.

3 C8.1 6' CHAIN LINK SECURITY FENCE W/ 3 STRANDS OF BARBED WIRE

SCALE: 1/2" = 1'-0"

BID SET

PRIVATE IMPROVEMENTS

1001191
PERMIT #

01-05-2023
DATE

DEVELOPMENT ENGINEER

PIERCE COUNTY ORDINANCE NUMBER 2021-45

1. CONTACT Dennis Peterson THE AREA INSPECTOR, AT 253-798- 2539 TO COORDINATE THE PRE-CONSTRUCTION MEETING AND COUNTY INSPECTIONS. PRE-CONSTRUCTION MEETING SHALL BE REQUESTED AT LEAST 48-HOURS IN ADVANCE OF THE START OF CONSTRUCTION.
2. APPOINT A CERTIFIED EROSION AND SEDIMENT CONTROL LEAD WHO SHALL BE PROVIDED A COPY OF THE SWPPP, EROSION CONTROL PLAN & INSPECTION SCHEDULE.
3. FAILURE TO OBTAIN REQUIRED INSPECTIONS MAY ENDANGER OR DELAY PROJECT APPROVAL.
4. ALL WORK IN THE PUBLIC RIGHT-OF-WAY REQUIRES A GENERAL RIGHT-OF-WAY PERMIT FROM PIERCE COUNTY PLANNING AND PUBLIC WORKS.

CAD NO.

NO.	REVISIONS	INT.	APP.	DATE

ACTION	BY	DATE
DESIGNED		
DRAWN		
CHECKED (FIELD)		
CHECKED (HDQTS.)		

STATE OF WASHINGTON
JONAH HAYES
No. 24012362 Exp. 05/16/2026
LICENSED LANDSCAPE ARCHITECT

REGISTERED STAMP

WASHINGTON STATE PARKS AND RECREATION COMMISSION

NISQUALLY STATE PARK

PHASE 3A MAINTENANCE BUILDING AND WWTF

FENCE & GATE DETAILS - PUMP HOUSE

A-C8.1

SCALE
AS SHOWN

PARKS FILE#

PRIVATE IMPROVEMENTS

1001191
PERMIT #

01-05-2023
DATE

DEVELOPMENT ENGINEER
PIERCE COUNTY ORDINANCE NUMBER 2021-45

1. CONTACT Dennis Peterson THE AREA INSPECTOR, AT 253-798- 2539 TO COORDINATE THE PRE-CONSTRUCTION MEETING AND COUNTY INSPECTIONS. PRE-CONSTRUCTION MEETING SHALL BE REQUESTED AT LEAST 48-HOURS IN ADVANCE OF THE START OF CONSTRUCTION.
2. APPOINT A CERTIFIED EROSION AND SEDIMENT CONTROL LEAD WHO SHALL BE PROVIDED A COPY OF THE SWPPP, EROSION CONTROL PLAN & INSPECTION SCHEDULE.
3. FAILURE TO OBTAIN REQUIRED INSPECTIONS MAY ENDANGER OR DELAY PROJECT APPROVAL.
4. ALL WORK IN THE PUBLIC RIGHT-OF-WAY REQUIRES A GENERAL RIGHT-OF-WAY PERMIT FROM PIERCE COUNTY PLANNING AND PUBLIC WORKS.

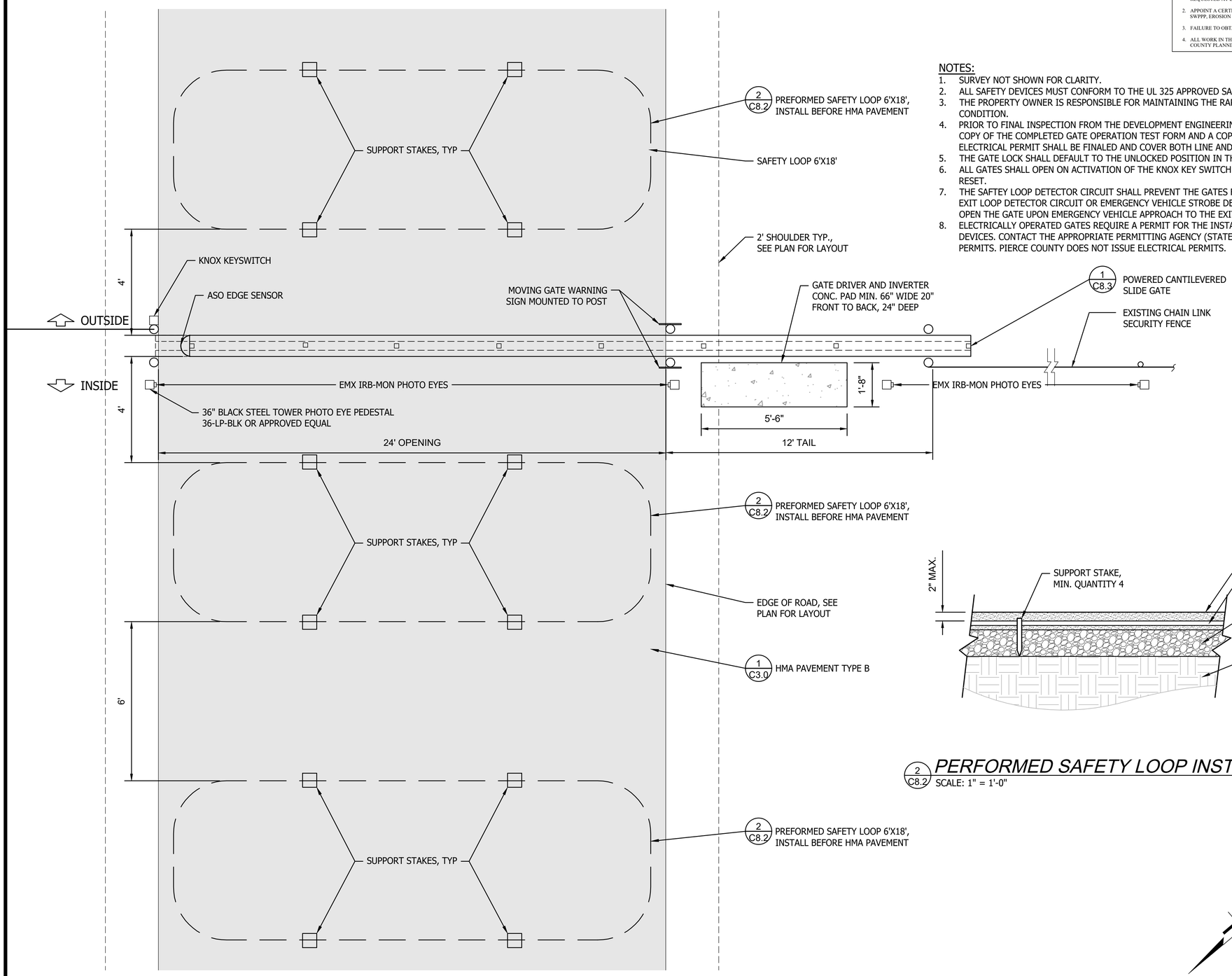

1 C8.2 *MECHANIZED EXISTING CANTILEVERED SLIDE GATE LAYOUT*
SCALE: NOT TO SCALE

NOTES:

1. SURVEY NOT SHOWN FOR CLARITY.
2. ALL SAFETY DEVICES MUST CONFORM TO THE UL 325 APPROVED SAFETY DEVICES FOR HYSECURITY OPERATORS.
3. THE PROPERTY OWNER IS RESPONSIBLE FOR MAINTAINING THE RAPID ENTRY DEVICES IN AN OPERABLE CONDITION.
4. PRIOR TO FINAL INSPECTION FROM THE DEVELOPMENT ENGINEERING SECTION THE APPLICANT SHALL SUBMIT A COPY OF THE COMPLETED GATE OPERATION TEST FORM AND A COPY OF THE ELECTRICAL PERMIT. THE ELECTRICAL PERMIT SHALL BE FINALED AND COVER BOTH LINE AND LOW VOLTAGE SYSTEMS.
5. THE GATE LOCK SHALL DEFAULT TO THE UNLOCKED POSITION IN THE EVENT OF A LOSS OF ELECTRICAL POWER.
6. ALL GATES SHALL OPEN ON ACTIVATION OF THE KNOX KEY SWITCH AND SHALL REMAIN OPEN UNTIL MANUALLY RESET.
7. THE SAFTEY LOOP DETECTOR CIRCUIT SHALL PREVENT THE GATES FROM CLOSING ON A VEHICLE IN ITS PATH. AN EXIT LOOP DETECTOR CIRCUIT OR EMERGENCY VEHICLE STROBE DETECTOR RECEIVER SHALL AUTOMATICALLY OPEN THE GATE UPON EMERGENCY VEHICLE APPROACH TO THE EXIT GATE FROM INSIDE THE COMPLEX.
8. ELECTRICALLY OPERATED GATES REQUIRE A PERMIT FOR THE INSTALLATION OF LINE AND LOW VOLTAGE DEVICES. CONTACT THE APPROPRIATE PERMITTING AGENCY (STATE OR UTILITY COMPANY) FOR REQUIRED PERMITS. PIERCE COUNTY DOES NOT ISSUE ELECTRICAL PERMITS.

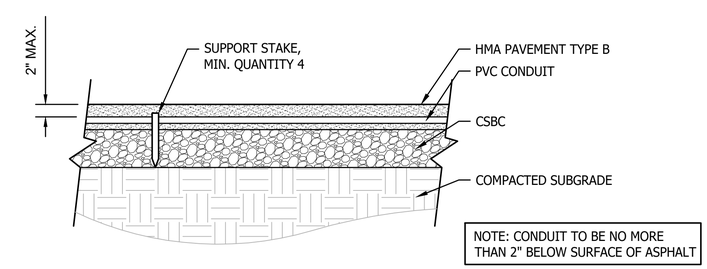

2 C8.2 *PERFORMED SAFETY LOOP INSTALLATION SECTION*
SCALE: 1" = 1'-0"

BID SET

CAD NO.

NO.	REVISIONS	INT.	APP.	DATE

ACTION	BY	DATE
DESIGNED		
DRAWN		
CHECKED (FIELD)		
CHECKED (HDQTS.)		

STATE OF WASHINGTON
JONAH HAYES
No. 24012382 EXP. 09/16/2026
LICENSED LANDSCAPE ARCHITECT

REGISTERED STAMP

WASHINGTON STATE PARKS AND RECREATION COMMISSION

NISQUALLY STATE PARK

PHASE 3A MAINTENANCE BUILDING AND WWTF

GATE LAYOUT - MAINT. BLDG.
A-C8.2

SCALE
AS SHOWN

PARKS FILE#

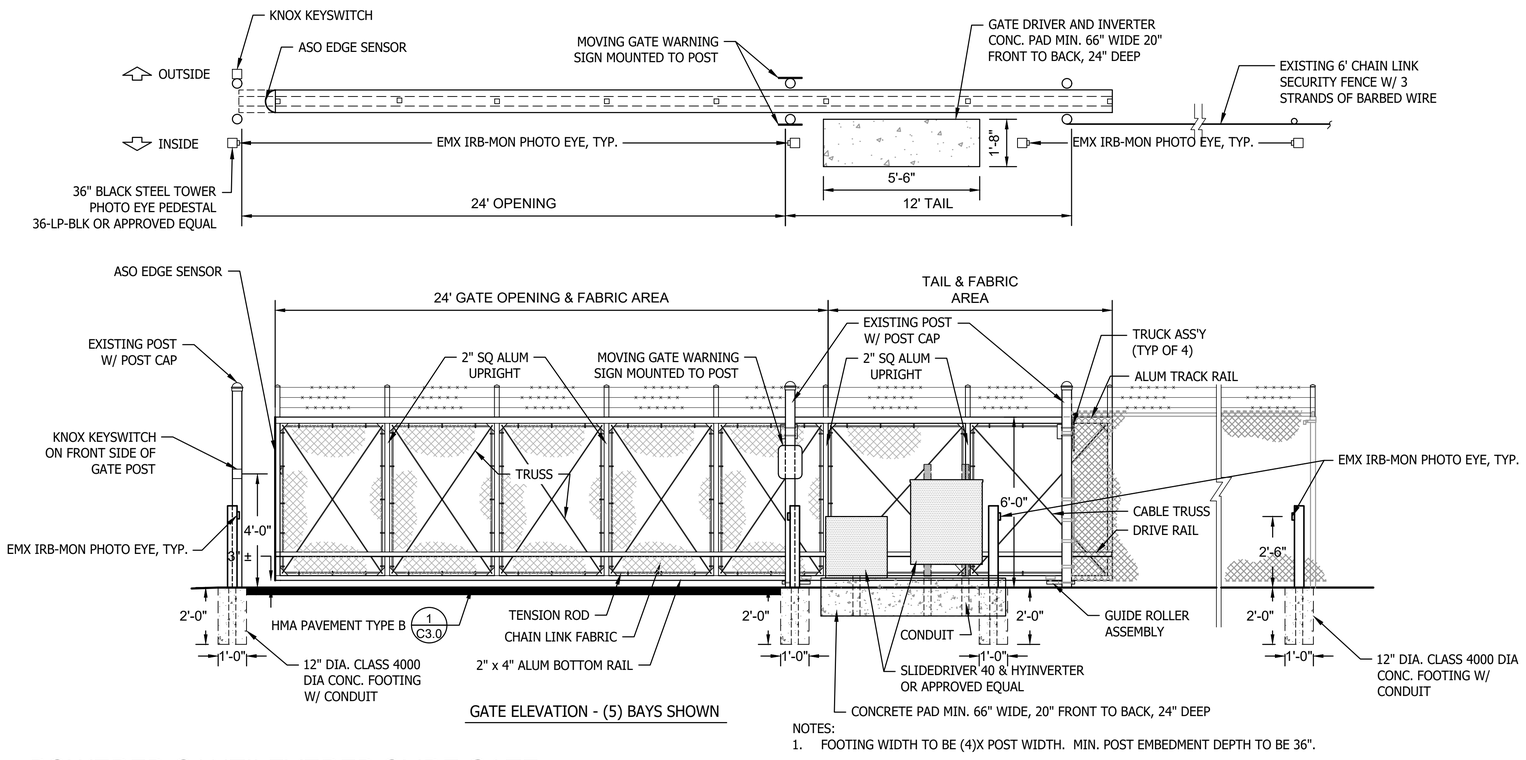

GATE ELEVATION - (5) BAYS SHOWN

NOTES:
1. FOOTING WIDTH TO BE (4)X POST WIDTH. MIN. POST EMBEDMENT DEPTH TO BE 36".

1 C8.3 POWERED CANTILEVERED SLIDE GATE

NOT TO SCALE

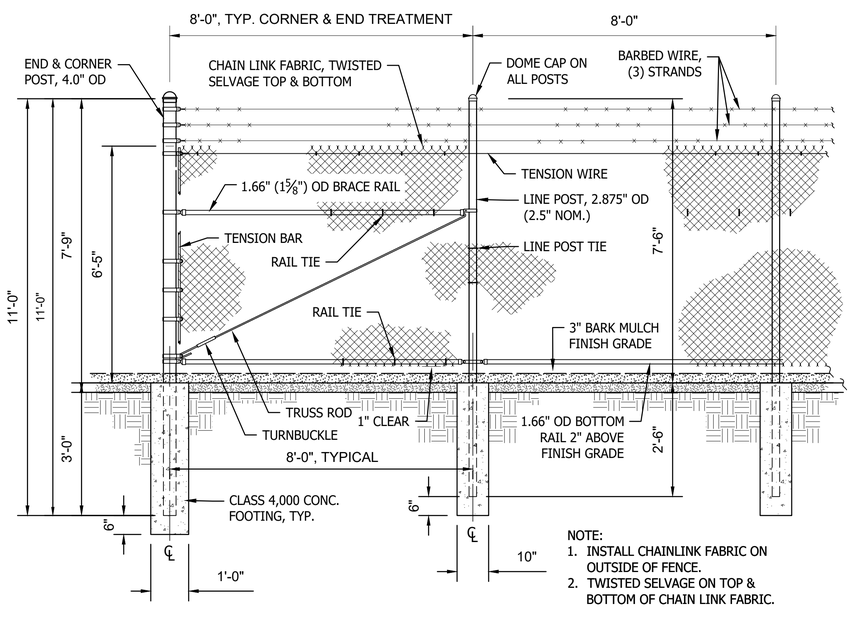

NOTE:
1. INSTALL CHAINLINK FABRIC ON OUTSIDE OF FENCE.
2. TWISTED SELVAGE ON TOP & BOTTOM OF CHAIN LINK FABRIC.

2 C8.3 6' CHAIN LINK SECURITY FENCE W/ 3 STRANDS OF BARBED WIRE

SCALE: 1/2" = 1'-0"

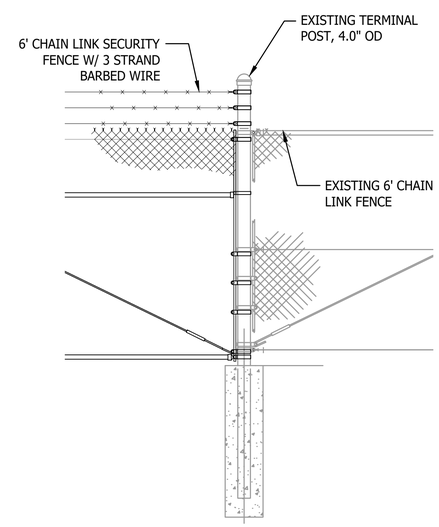

3 C8.3 CONNECTION TO EXISTING FENCE

SCALE: 1/2" = 1'-0"

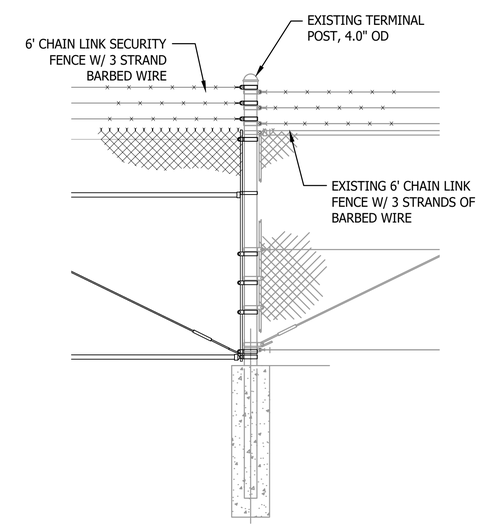

4 C8.3 CONNECTION TO EXISTING FENCE W/ 3 STRANDS OF BARBED WIRE

SCALE: 1/2" = 1'-0"

BID SET

SHEET 34 OF 226

PRIVATE IMPROVEMENTS

PERMIT # 1001191

DATE 01-05-2023

DEVELOPMENT ENGINEER

PIERCE COUNTY ORDINANCE NUMBER 2021-45

1. CONTACT Dennis Peterson THE AREA INSPECTOR, AT 253-798- 2539 TO COORDINATE THE PRE-CONSTRUCTION MEETING AND COUNTY INSPECTIONS. PRE-CONSTRUCTION MEETING SHALL BE REQUESTED AT LEAST 48-HOURS IN ADVANCE OF THE START OF CONSTRUCTION.
2. APPOINT A CERTIFIED EROSION AND SEDIMENT CONTROL LEAD WHO SHALL BE PROVIDED A COPY OF THE SWPPP, EROSION CONTROL PLAN & INSPECTION SCHEDULE.
3. FAILURE TO OBTAIN REQUIRED INSPECTIONS MAY ENDANGER OR DELAY PROJECT APPROVAL.
4. ALL WORK IN THE PUBLIC RIGHT-OF-WAY REQUIRES A GENERAL RIGHT-OF-WAY PERMIT FROM PIERCE COUNTY PLANNING AND PUBLIC WORKS.

CAD NO.

NO.	REVISIONS	INT.	APP.	DATE

ACTION	BY	DATE
DESIGNED		
DRAWN		
CHECKED (FIELD)		
CHECKED (HDQTS.)		

STATE OF WASHINGTON JONAH HAYES No. 24012362 EXP. 05/16/2023 LICENSED LANDSCAPE ARCHITECT

REGISTERED STAMP

WASHINGTON STATE PARKS AND RECREATION COMMISSION

NISQUALLY STATE PARK

PHASE 3A MAINTENANCE BUILDING AND WWTF

FENCE & GATE DETAILS - MAINT. BLDG.

A-C8.3

SCALE

AS SHOWN

PARKS FILE#

NOTES:

DRIVE RAIL HEIGHT IS MARKED ON THE SIDE OF EACH CHASSIS.

COVERS MUST BE USED FOR PROTECTION ON ALL EXPOSED WHEELS AND/OR HARDWARE. COVERS ARE SHOWN HERE AS DOTTED LINES.

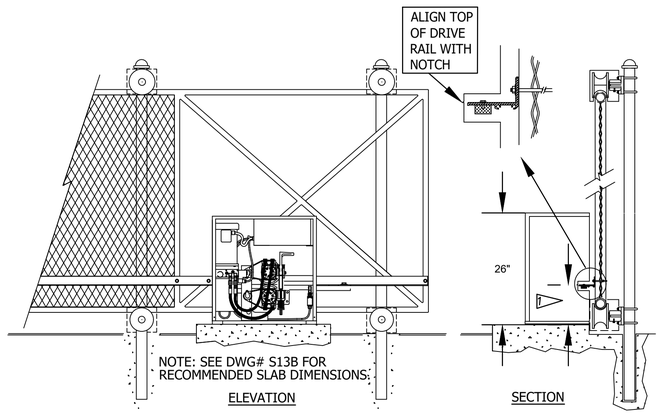

NOTES:

CONSULT FENCE CONTRACTOR FOR RECOMMENDED CANTILEVER POST SPACING. 50% OF GATE OPENING GENERALLY PROVIDES SMOOTH OPERATION.

RIGHT HAND CANTILEVER GATE IS SHOWN IN THE FULLY CLOSED POSITION. OPERATOR COVER OMITTED FROM DETAIL. (DO NOT SCALE).

IT MAY BE NECESSARY TO SHIM DRIVE RAIL IF GATE PANEL IS "BOWED". RAIL MUST BE INSTALLED IN A STRAIGHT LINE.

9 1/2"APPROXIMATE RAIL HEIGHT FROM PAD .FINAL ADJUSTMENT TO BE MADE PER NOTCH ON CHASSIS.

1 C8.6 SLIDE GATE OPERATOR - SECTION

SCALE: NOT TO SCALE

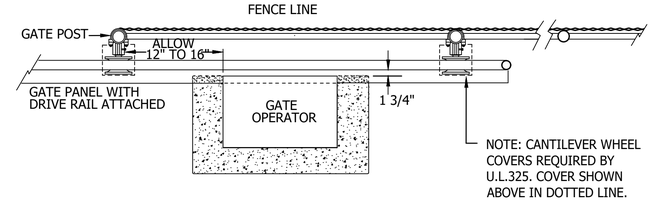

NOTE:

MINIMUM CONCRETE SLAB DIMENSIONS ARE: 66"WIDE, 20" FROM FRONT TO BACK AND 24" DEEP. CHECK LOCAL FROST CONDITIONS AND SOIL CHARACTERISTICS FOR EXACT REQUIREMENTS IN YOUR AREA.

OPERATOR IS INSTALLED ON A CONCRETE PAD AND CONNECTED TO THE RIGHT HAND CANTILEVER GATE PANEL. 4" POSTS ARE SHOWN FOR GATE SUPPORT AND FENCE TERMINATION.

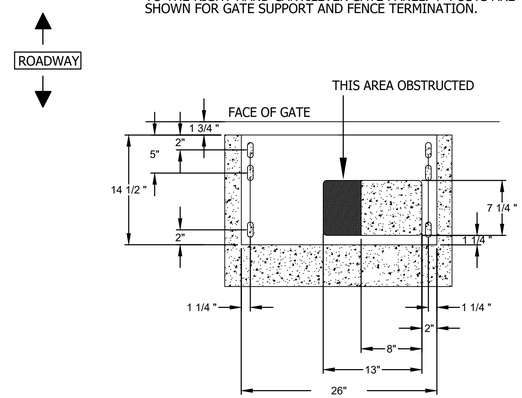

NOTE:
CONTACT A FENCE CONTRACTOR FOR EXACT SPACING ON CANTILEVER POSTS. 50% OF OPENING WIDTH GENERALLY PROVIDES A SMOOTH OPERATION.

2 C8.6 SLIDE GATE OPERATOR - PLAN

SCALE: NOT TO SCALE

IN OPERATION. TAPERED ENDS, ALWAYS POINT SIDE VIEW OF LIMIT RAMP AND LIMIT SWITCH TOWARD THE OPERATOR DRIVE WHEELS.

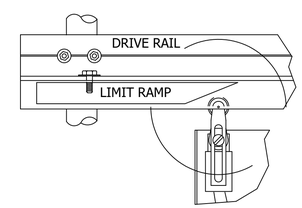

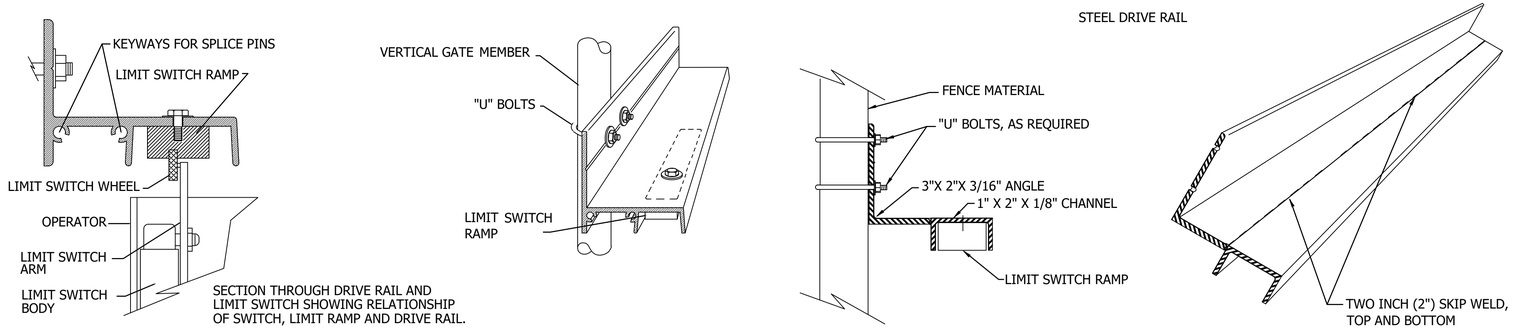

3 C8.6 SLIDE GATE OPERATOR - DRIVE RAIL

SCALE: NOT TO SCALE

BID SET

SHEET 35 OF 226

PRIVATE IMPROVEMENTS

1001191
PERMIT #

01-05-2023
DATE

DEVELOPMENT ENGINEER

PIERCE COUNTY ORDINANCE NUMBER 2021-45

1. CONTACT Dennis Peterson THE AREA INSPECTOR, AT 253-798- 2539 TO COORDINATE THE PRE-CONSTRUCTION MEETING AND COUNTY INSPECTIONS. PRE-CONSTRUCTION MEETING SHALL BE REQUESTED AT LEAST 48-HOURS IN ADVANCE OF THE START OF CONSTRUCTION.
2. APPOINT A CERTIFIED EROSION AND SEDIMENT CONTROL LEAD WHO SHALL BE PROVIDED A COPY OF THE SWPPP, EROSION CONTROL PLAN & INSPECTION SCHEDULE.
3. FAILURE TO OBTAIN REQUIRED INSPECTIONS MAY ENDANGER OR DELAY PROJECT APPROVAL.
4. ALL WORK IN THE PUBLIC RIGHT-OF-WAY REQUIRES A GENERAL RIGHT-OF-WAY PERMIT FROM PIERCE COUNTY PLANNING AND PUBLIC WORKS.

CAD NO.

NO.	REVISIONS	INT.	APP.	DATE

ACTION	BY	DATE
DESIGNED		
DRAWN		
CHECKED (FIELD)		
CHECKED (HDQTS.)		

STATE OF WASHINGTON
JONAH HAYES
No. 24012362 EXP. 05/16/2026
LICENSED LANDSCAPE ARCHITECT

REGISTERED STAMP

WASHINGTON STATE PARKS AND RECREATION COMMISSION

NISQUALLY STATE PARK

PHASE 3A MAINTENANCE BUILDING AND WWTF

FENCE & GATE DETAILS

A-C8.4

SCALE
AS SHOWN

PARKS FILE#

PLANTING SCHEDULE

PLANTING	2,650 SF		
POLYSTICHUM MUNITUM / WESTERN SWORD FERN	90	PLUG	30% @ 36" o.c
SYMPHORICARPOS ALBUS / COMMON WHITE SNOWBERRY	90	PLUG	40% @ 48" o.c.
MAHONIA AQUIFOLIUM / OREGON GRAPE	120	PLUG	30% @ 36" o.c.
TOPSOIL			
3" TOPSOIL TYPE A W/ 3" WOOD CHIPS	2,950 SF		
3" WOOD CHIPS	540 SF		

PLANTING IMPROVEMENTS GENERAL NOTES

1. CONTRACTOR IS REQUIRED TO VERIFY UTILITY LOCATIONS PRIOR TO CONSTRUCTION. CONTRACTOR SHALL CALL THE UTILITIES UNDERGROUND LOCATION CENTER (1-800-424-5555) AT LEAST TWO DAYS PRIOR TO CONSTRUCTION.
2. CONTRACTOR SHALL COORDINATE ALL WORK WITH THE GENERAL CONTRACTOR. ALL CONSTRUCTION CONFLICTS SHALL BE BROUGHT TO THE ATTENTION OF THE GENERAL CONTRACTOR AND CONSTRUCTION OBSERVER IMMEDIATELY UPON RECOGNITION.
3. CONTRACTOR IS RESPONSIBLE FOR A THOROUGH CLEAN-UP FOR HIS/HER RESPECTIVE WORK, DAILY AND AT PROJECT CLOSE-OUT.
4. CONTRACTOR IS RESPONSIBLE FOR PROTECTING ALL EXISTING IMPROVEMENTS. DAMAGE TO THE EXISTING IMPROVEMENTS BY THE CONTRACTOR SHALL BE REPAIRED OR REPLACED BY THE CONTRACTOR AND/OR QUALIFIED INSTALLERS/TRADES ACCEPTABLE TO THE SOLE SATISFACTION OF THE CONSTRUCTION OBSERVER AND AT NO COST TO THE OWNER.
5. PLANT MATERIALS SHALL MEET STANDARDS SET FORTH IN THE LATEST EDITION OF THE AMERICAN ASSOCIATION OF NURSERYMEN STANDARD (ANSI Z60.1) AND WASHINGTON STATE STANDARDS FOR NURSERY STOCK ORDER NO. 1627. ALL PLANT MATERIALS SHALL HAVE SUFFICIENT ROOT DEVELOPMENT TO ASSURE SURVIVAL AND HEALTHY GROWTH. CONTAINER GROWN PLANT MATERIALS ARE REQUIRED TO HAVE SUFFICIENT ROOT GROWTH TO HOLD THE SOIL INTACT WHEN REMOVED FORM THE CONTAINER, BUT SHALL NOT BE ROOT BOUND.
6. NO SUBSTITUTIONS SHALL BE CONSIDERED FOR PLANTS OR OTHER MATERIALS DURING THE BIDDING PROCESS.
6. CONTRACTOR SHALL WARRANTY PLANT MATERIALS INSTALLED FOR A PERIOD OF ONE YEAR AFTER FINAL ACCEPTANCE HAS BEEN GRANTED, AFTER WHICH TIME OWNER SHALL ASSUME ALL RESPONSIBILITIES FOR MAINTAINING LANDSCAPE IMPROVEMENTS FOR THE LIFE OF THIS PROJECT.
7. CONTRACTOR SHALL WATER IN ALL PLANTS AT TIME OF PLANTING.

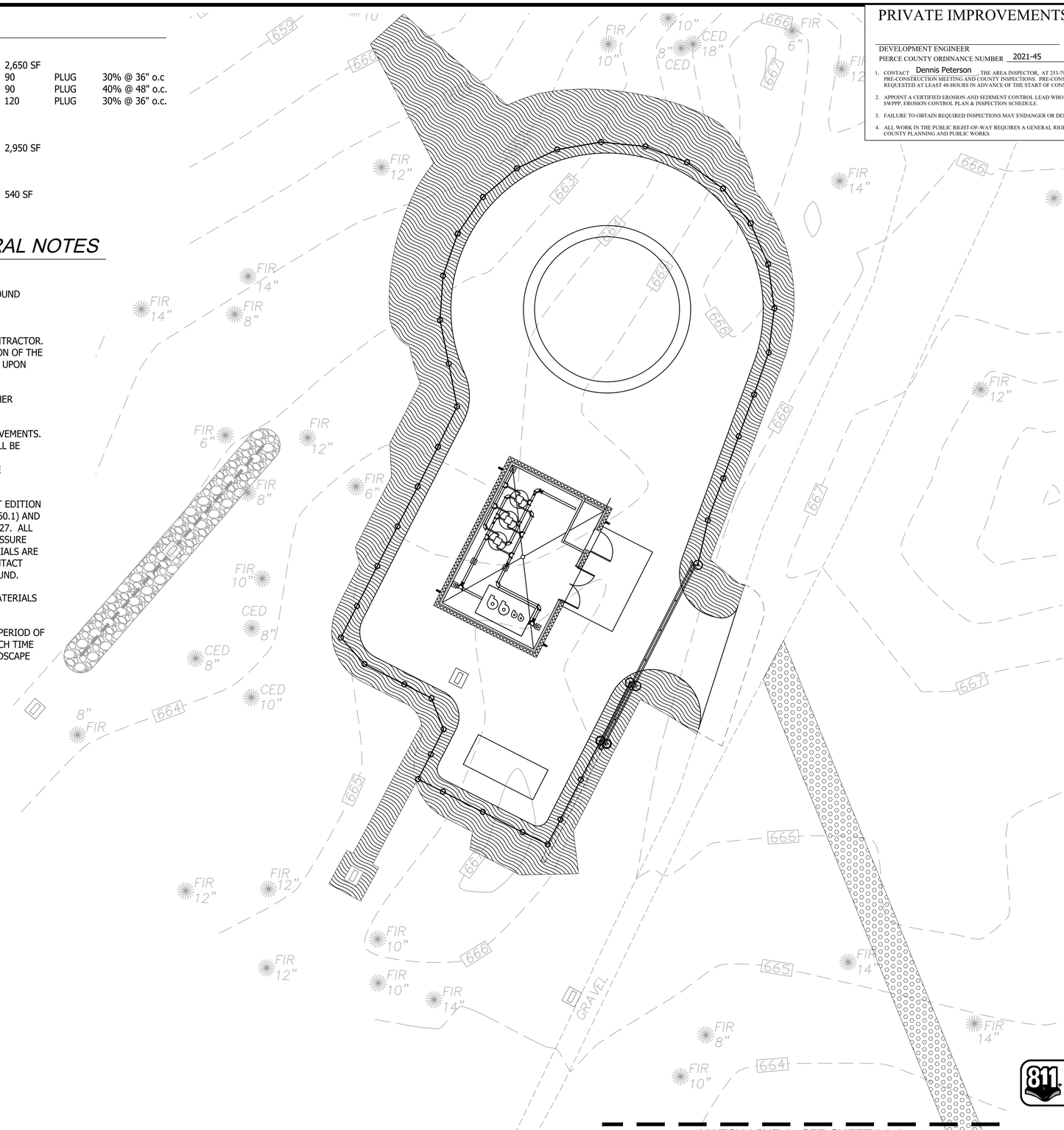

KEYMAP (NTS)

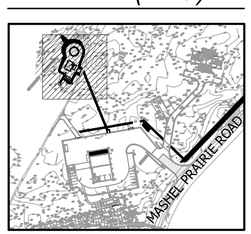

Call 811 two business days before you dig

BID SET

SHEET 36 OF 226

PRIVATE IMPROVEMENTS

1001191 PERMIT #

01-05-2023 DATE

DEVELOPMENT ENGINEER

PIERCE COUNTY ORDINANCE NUMBER 2021-45

1. CONTACT Dennis Peterson THE AREA INSPECTOR, AT 253-798- 2539 TO COORDINATE THE PRE-CONSTRUCTION MEETING AND COUNTY INSPECTIONS. PRE-CONSTRUCTION MEETING SHALL BE REQUESTED AT LEAST 48-HOURS IN ADVANCE OF THE START OF CONSTRUCTION.
2. APPOINT A CERTIFIED EROSION AND SEDIMENT CONTROL LEAD WHO SHALL BE PROVIDED A COPY OF THE SWPPP, EROSION CONTROL PLAN & INSPECTION SCHEDULE.
3. FAILURE TO OBTAIN REQUIRED INSPECTIONS MAY ENDANGER OR DELAY PROJECT APPROVAL.
4. ALL WORK IN THE PUBLIC RIGHT-OF-WAY REQUIRES A GENERAL RIGHT-OF-WAY PERMIT FROM PIERCE COUNTY PLANNING AND PUBLIC WORKS.

CAD NO.

NO.	REVISIONS	INT.	APP.	DATE

ACTION	BY	DATE
DESIGNED		
DRAWN		
CHECKED (FIELD)		
CHECKED (HDQTS.)		

STATE OF WASHINGTON · JONAH HAYES · No. 24012362 EXP. 05/16/2026 · LICENSED LANDSCAPE ARCHITECT

REGISTERED STAMP

WASHINGTON STATE PARKS AND RECREATION COMMISSION

NISQUALLY STATE PARK

PHASE 3A MAINTENANCE BUILDING AND WWTF

RESTORATION PLAN - PUMP HOUSE

A-L1.0

SCALE 0 10' 20'

PARKS FILE#

C:\2018\18082A New Full Service Park Design Services\Drawings\Sheets\Phase 3\Bid Set 1 Maint, Pump, WWTF, Utility\A-L1.0 Landscape Plan - Pump.dwg
Feb-27-25 8:39am

TOPSOIL SCHEDULE

SYMBOL	DESCRIPTION	QTY
	3" BARK MULCH	1,400 SF
	3" TOPSOIL TYPE A W/ 3" BARK MULCH	8,600 SF
	3" WOOD CHIPS	4,760 SF

PLANTING SCHEDULE

PLANT MIX - 8,600 SF	QTY	SPACING	SIZE
MAHONIA AQUIFOLIUM / OREGON GRAPE	300	30% @ 36" oc	PLUG
POLYSTICHUM MUNITUM / WESTERN SWORD FERN	300	30% @ 36" oc	PLUG
SYMPHORICARPOS ALBUS / COMMON WHITE SNOWBERRY	400	40% @ 36" oc	PLUG

PRIVATE IMPROVEMENTS

1001191
PERMIT #

01-05-2023
DATE

DEVELOPMENT ENGINEER
PIERCE COUNTY ORDINANCE NUMBER 2021-45

1. CONTACT Dennis Peterson THE AREA INSPECTOR, AT 253-798- 2539 TO COORDINATE THE PRE-CONSTRUCTION MEETING AND COUNTY INSPECTIONS. PRE-CONSTRUCTION MEETING SHALL BE REQUESTED AT LEAST 48-HOURS IN ADVANCE OF THE START OF CONSTRUCTION.
2. APPOINT A CERTIFIED EROSION AND SEDIMENT CONTROL LEAD WHO SHALL BE PROVIDED A COPY OF THE SWPPP, EROSION CONTROL PLAN & INSPECTION SCHEDULE.
3. FAILURE TO OBTAIN REQUIRED INSPECTIONS MAY ENDANGER OR DELAY PROJECT APPROVAL.
4. ALL WORK IN THE PUBLIC RIGHT-OF-WAY REQUIRES A GENERAL RIGHT-OF-WAY PERMIT FROM PIERCE COUNTY PLANNING AND PUBLIC WORKS.

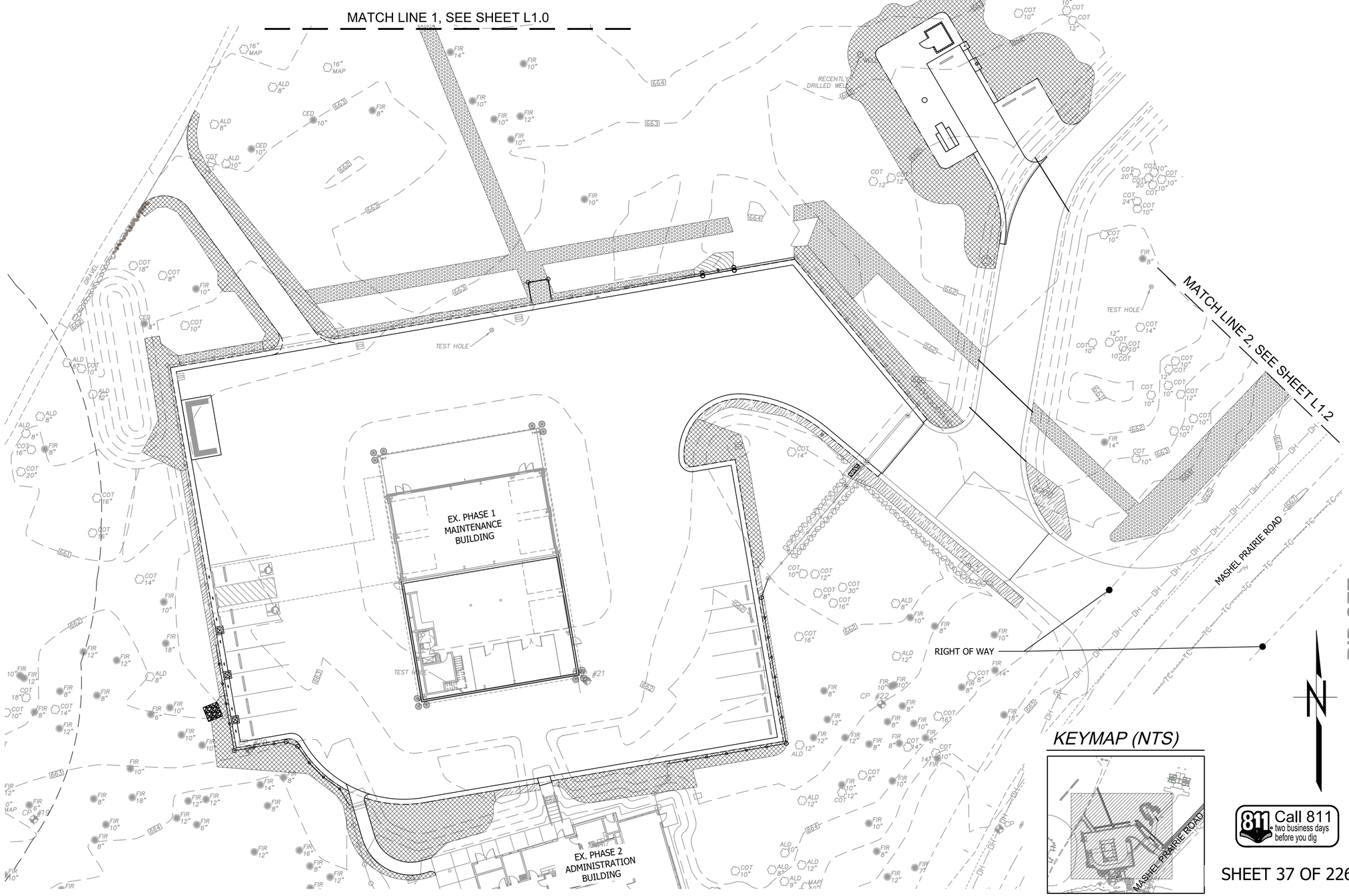

SHEET 37 OF 226

CAD NO.

NO.	REVISIONS	INT.	APP.	DATE

ACTION	BY	DATE
DESIGNED		
DRAWN		
CHECKED (FIELD)		
CHECKED (HDQTS.)		

STATE OF WASHINGTON
JONAH HAYES
No. 24012362 EXP. 05/16/2026
LICENSED LANDSCAPE ARCHITECT

REGISTERED STAMP

WASHINGTON STATE PARKS AND RECREATION COMMISSION

NISQUALLY STATE PARK

PHASE 3A MAINTENANCE BUILDING AND WWTF

RESTORATION PLAN - MAINT. BLDG.
A-L1.1

SCALE 20' 0 40'

PARKS FILE#

O:\2018\18062A New Full Service Park Design Services\Drawings\Sheets\Phase 3\Bid Set 1 Maint, Pump, WWTF, Utility\A-L1.1 Landscape Plan - Maint.dwg
Feb-25-25 3:30pm

PRIVATE IMPROVEMENTS

1001191
PERMIT #

01-05-2023
DATE

DEVELOPMENT ENGINEER

PIERCE COUNTY ORDINANCE NUMBER 2021-45

1. CONTACT Dennis Peterson THE AREA INSPECTOR, AT 253-798- 2539 TO COORDINATE THE PRE-CONSTRUCTION MEETING AND COUNTY INSPECTIONS. PRE-CONSTRUCTION MEETING SHALL BE REQUESTED AT LEAST 48-HOURS IN ADVANCE OF THE START OF CONSTRUCTION.
2. APPOINT A CERTIFIED EROSION AND SEDIMENT CONTROL LEAD WHO SHALL BE PROVIDED A COPY OF THE SWPPP, EROSION CONTROL PLAN & INSPECTION SCHEDULE.
3. FAILURE TO OBTAIN REQUIRED INSPECTIONS MAY ENDANGER OR DELAY PROJECT APPROVAL.
4. ALL WORK IN THE PUBLIC RIGHT-OF-WAY REQUIRES A GENERAL RIGHT-OF-WAY PERMIT FROM PIERCE COUNTY PLANNING AND PUBLIC WORKS.

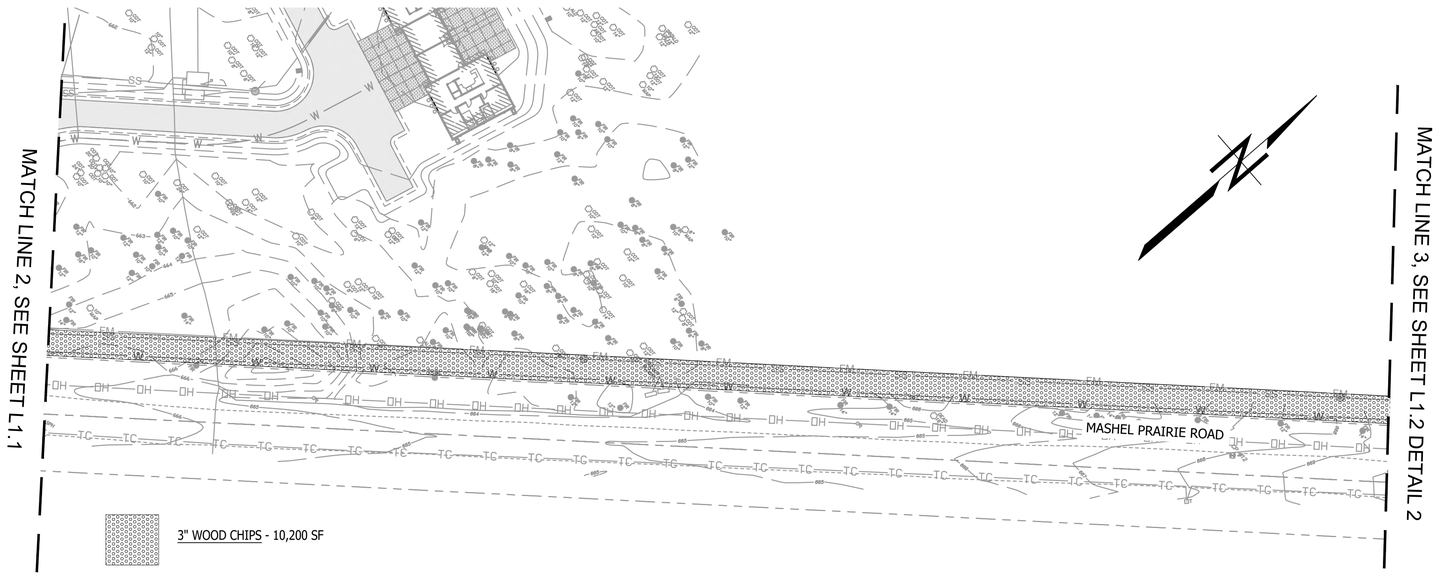

1 L1.2 MASHEL PRAIRIE ROAD - SEGMENT 1 PLAN
SCALE: 1" = 40'-0"

KEY MAP (NTS)

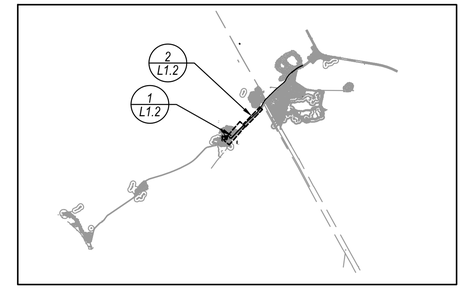

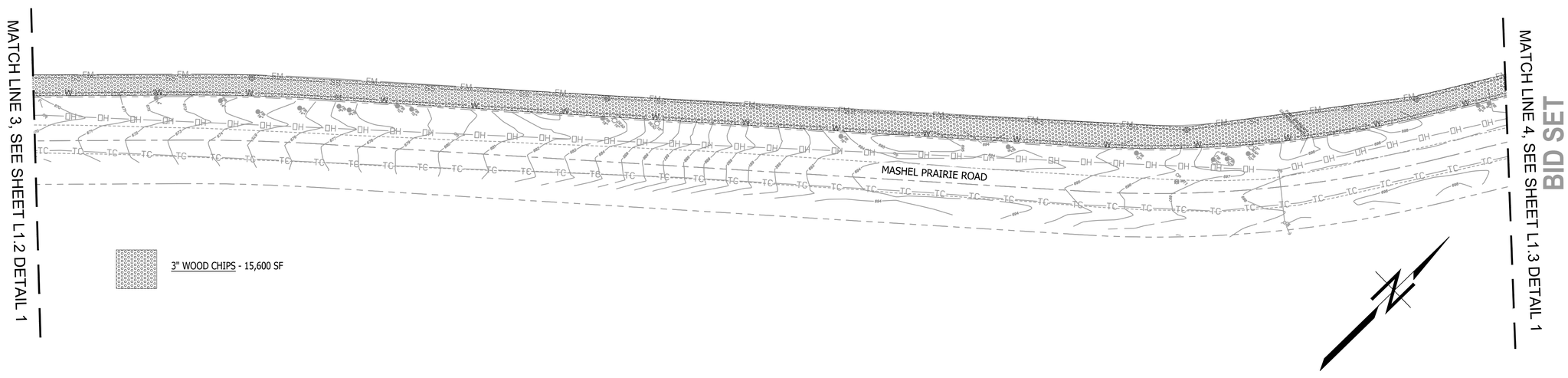

2 L1.2 MASHEL PRAIRIE ROAD - SEGMENT 2 PLAN
SCALE: 1" = 40'-0"

BID SET

CAD NO.

NO.	REVISIONS	INT.	APP.	DATE

ACTION	BY	DATE
DESIGNED		
DRAWN		
CHECKED (FIELD)		
CHECKED (HDQTS.)		

STATE OF WASHINGTON
JONAH HAYES
No. 24012362 EXP. 05/16/2026
LICENSED LANDSCAPE ARCHITECT

REGISTERED STAMP

WASHINGTON STATE PARKS AND RECREATION COMMISSION

NISQUALLY STATE PARK

PHASE 3A MAINTENANCE BUILDING AND WWTF

RESTORATION PLAN - MASHEL PRAIRIE ROAD

A-L1.2

SCALE 0 40' 80'

PARKS FILE#

PRIVATE IMPROVEMENTS

1001191	PERMIT #
01-05-2023	DATE

DEVELOPMENT ENGINEER

PIERCE COUNTY ORDINANCE NUMBER 2021-45

1. CONTACT Dennis Peterson THE AREA INSPECTOR, AT 253-798- 2539 TO COORDINATE THE PRE-CONSTRUCTION MEETING AND COUNTY INSPECTIONS. PRE-CONSTRUCTION MEETING SHALL BE REQUESTED AT LEAST 48-HOURS IN ADVANCE OF THE START OF CONSTRUCTION.
2. APPOINT A CERTIFIED EROSION AND SEDIMENT CONTROL LEAD WHO SHALL BE PROVIDED A COPY OF THE SWPPP, EROSION CONTROL PLAN & INSPECTION SCHEDULE.
3. FAILURE TO OBTAIN REQUIRED INSPECTIONS MAY ENDANGER OR DELAY PROJECT APPROVAL.
4. ALL WORK IN THE PUBLIC RIGHT-OF-WAY REQUIRES A GENERAL RIGHT-OF-WAY PERMIT FROM PIERCE COUNTY PLANNING AND PUBLIC WORKS.

KEY MAP (NTS)

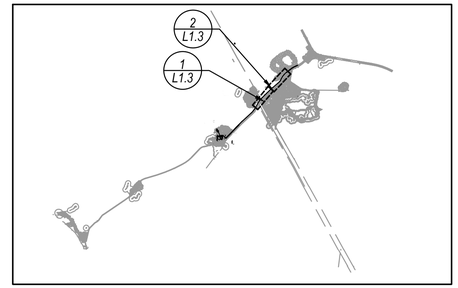

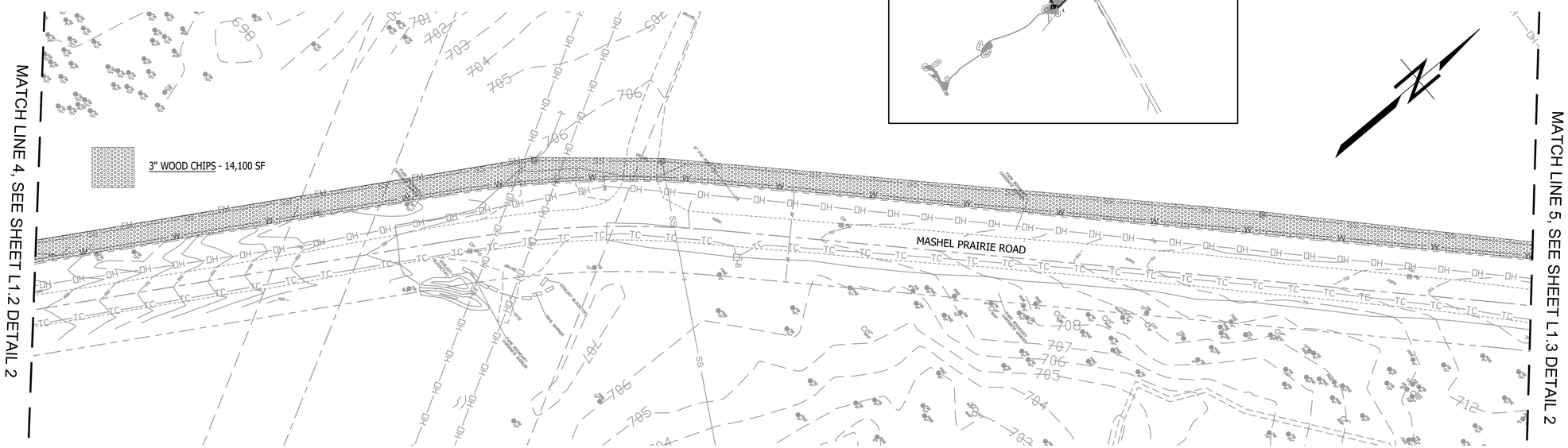

1 L1.3 MASHEL PRAIRIE ROAD - SEGMENT 3 PLAN

SCALE: 1" = 40'-0"

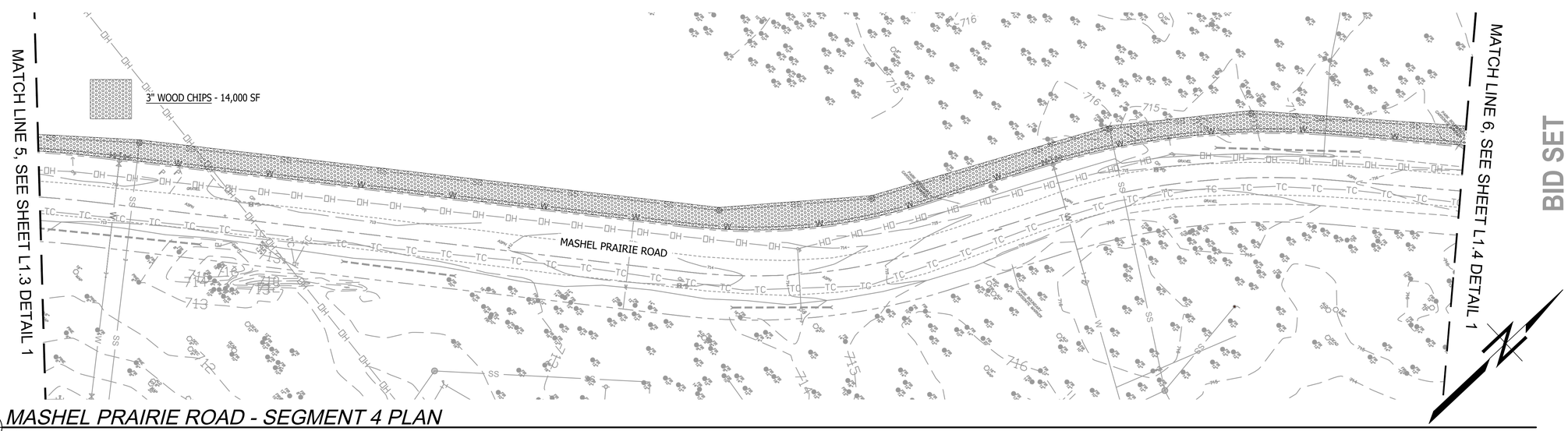

2 L1.3 MASHEL PRAIRIE ROAD - SEGMENT 4 PLAN

SCALE: 1" = 40'-0"

BID SET

CAD NO.

NO.	REVISIONS	INT.	APP.	DATE

ACTION	BY	DATE
DESIGNED		
DRAWN		
CHECKED (FIELD)		
CHECKED (HDQTS.)		

STATE OF WASHINGTON
JONAH HAYES
No. 2401238Z EXP. 05/16/2026
LICENSED LANDSCAPE ARCHITECT

REGISTERED STAMP

WASHINGTON STATE PARKS AND RECREATION COMMISSION

NISQUALLY STATE PARK

PHASE 3A MAINTENANCE BUILDING AND WWTF

RESTORATION PLAN - MASHEL PRAIRIE ROAD

A-L1.3

SCALE 0 40' 80'

PARKS FILE#

PRIVATE IMPROVEMENTS

1001191
PERMIT #

01-05-2023
DATE

DEVELOPMENT ENGINEER

PIERCE COUNTY ORDINANCE NUMBER 2021-45

1. CONTACT Dennis Peterson THE AREA INSPECTOR, AT 253-798- 2539 TO COORDINATE THE PRE-CONSTRUCTION MEETING AND COUNTY INSPECTIONS. PRE-CONSTRUCTION MEETING SHALL BE REQUESTED AT LEAST 48-HOURS IN ADVANCE OF THE START OF CONSTRUCTION.
2. APPOINT A CERTIFIED EROSION AND SEDIMENT CONTROL LEAD WHO SHALL BE PROVIDED A COPY OF THE SWPPP, EROSION CONTROL PLAN & INSPECTION SCHEDULE.
3. FAILURE TO OBTAIN REQUIRED INSPECTIONS MAY ENDANGER OR DELAY PROJECT APPROVAL.
4. ALL WORK IN THE PUBLIC RIGHT-OF-WAY REQUIRES A GENERAL RIGHT-OF-WAY PERMIT FROM PIERCE COUNTY PLANNING AND PUBLIC WORKS.

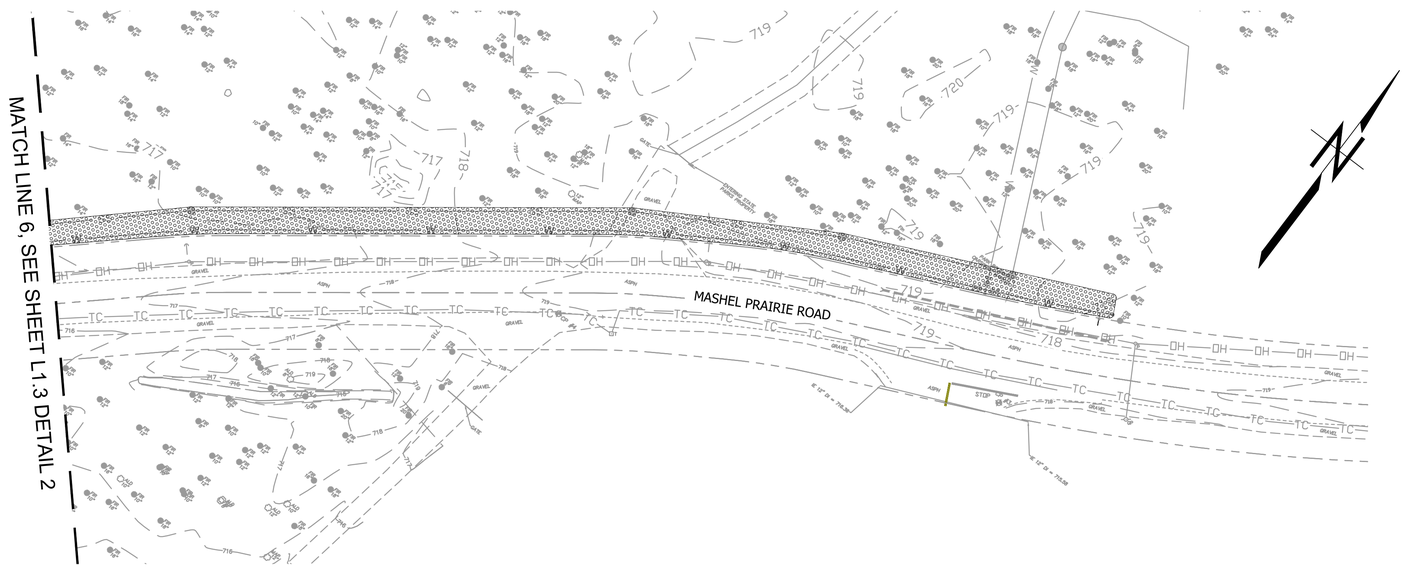

1 L1.4 MASHEL PRAIRIE ROAD - SEGMENT 5 PLAN
SCALE: 1" = 40'-0"

KEY MAP (NTS)

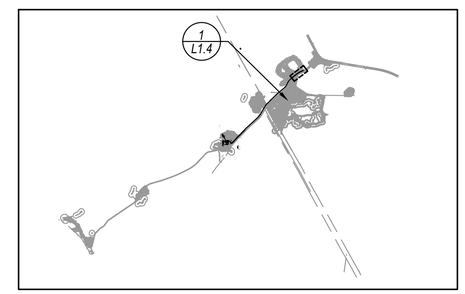

3" WOOD CHIPS - 7,900 SF

BID SET

SHEET 40 OF 226

CAD NO.

NO.	REVISIONS	INT.	APP.	DATE

ACTION	BY	DATE
DESIGNED		
DRAWN		
CHECKED (FIELD)		
CHECKED (HDQTS.)		

STATE OF WASHINGTON
JONAH HAYES
No. 24012362 EXP. 05/16/2026
LICENSED LANDSCAPE ARCHITECT

REGISTERED STAMP

WASHINGTON STATE PARKS AND RECREATION COMMISSION

NISQUALLY STATE PARK

PHASE 3A MAINTENANCE BUILDING AND WWTF

RESTORATION PLAN - MASHEL PRAIRIE ROAD

A-L1.4

SCALE 40' 0 80'

PARKS FILE#

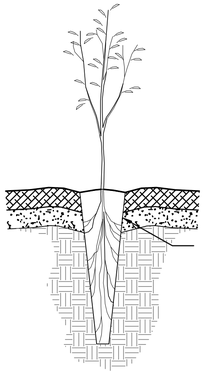

1. MAKE A SUITABLE HOLE WITH A ROCK BAR OR EQUIVALENT PLANTING TOOL.
2. REMOVE PLUG FROM CONTAINER AND INSTALL DIRECTLY INTO NATIVE SOIL.
3. GENTLY PRESS SOIL AROUND PLUG BY STEPPING LIGHTLY ON SOIL NEXT TO THE PLUG.

1 / L2.0 PLUG & CONE-TAINER PLANTING

SCALE: NTS

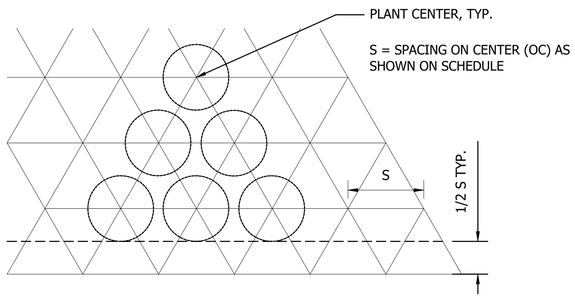

2 / L2.0 TRIANGULAR PLANT SPACING

SCALE: NOT TO SCALE

PRIVATE IMPROVEMENTS

1001191
PERMIT #

01-05-2023
DATE

DEVELOPMENT ENGINEER

PIERCE COUNTY ORDINANCE NUMBER 2021-45

1. CONTACT Dennis Peterson THE AREA INSPECTOR, AT 253-798- 2539 TO COORDINATE THE PRE-CONSTRUCTION MEETING AND COUNTY INSPECTIONS. PRE-CONSTRUCTION MEETING SHALL BE REQUESTED AT LEAST 48-HOURS IN ADVANCE OF THE START OF CONSTRUCTION.
2. APPOINT A CERTIFIED EROSION AND SEDIMENT CONTROL LEAD WHO SHALL BE PROVIDED A COPY OF THE SWPPP, EROSION CONTROL PLAN & INSPECTION SCHEDULE.
3. FAILURE TO OBTAIN REQUIRED INSPECTIONS MAY ENDANGER OR DELAY PROJECT APPROVAL.
4. ALL WORK IN THE PUBLIC RIGHT-OF-WAY REQUIRES A GENERAL RIGHT-OF-WAY PERMIT FROM PIERCE COUNTY PLANNING AND PUBLIC WORKS.

CAD NO.

NO.	REVISIONS	INT.	APP.	DATE

ACTION	BY	DATE
DESIGNED		
DRAWN		
CHECKED (FIELD)		
CHECKED (HDQTS.)		

STATE OF WASHINGTON
JONAH HAYES
No. 24012362 EXP. 05/16/2026
LICENSED LANDSCAPE ARCHITECT

REGISTERED STAMP

WASHINGTON STATE PARKS AND RECREATION COMMISSION

NISQUALLY STATE PARK

PHASE 3A MAINTENANCE BUILDING AND WWTF RESTORATION PLANTING DETAILS

A-L2.0

SCALE

PARKS FILE#

BID SET

Call 811 two business days before you dig

SHEET 41 OF 226

G:\2018\180624 New Full Service Park Design Services\Drawings\Sheets\Phase 3\Bid Set 1 Maint, Pump, WWTF, Utility\Schedule A\A-L2.0 Restoration Planting Details.dwg
Jan-08-25 9:51am

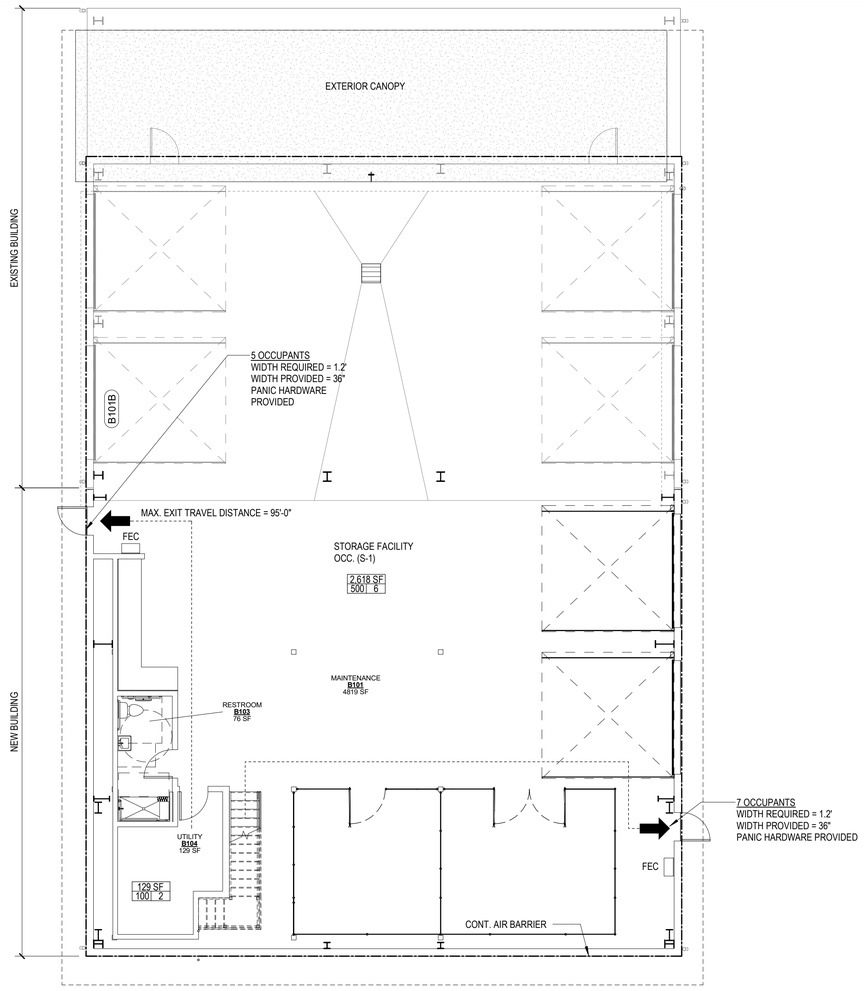

1 LIFE SAFETY PLAN
1/8" = 1'-0"

0 4 8 16 FT

NORTH

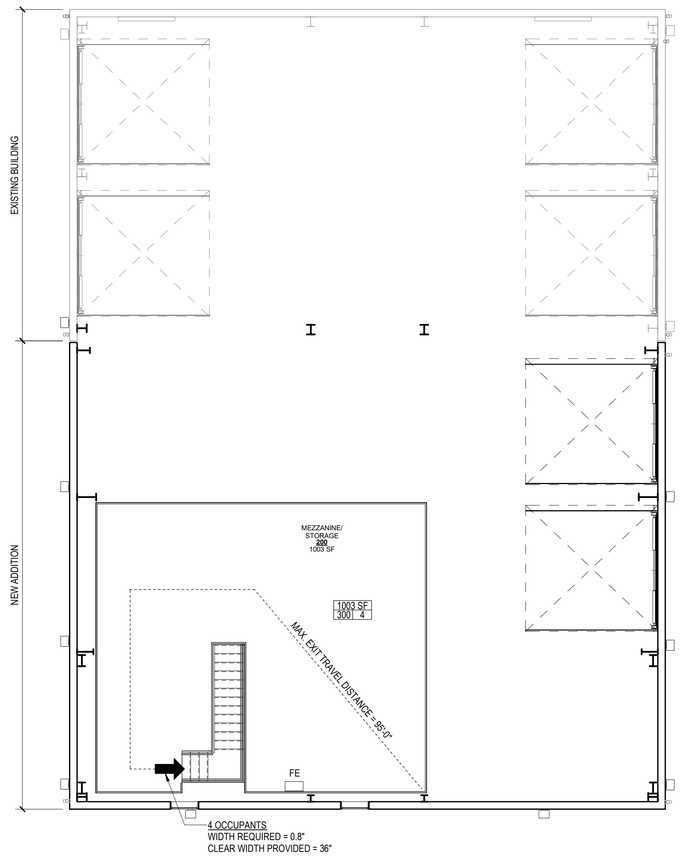

2 MAINTENANCE BUILDING - SECOND FLOOR LIFE SAFETY PLAN
1/8" = 1'-0"

0 4 8 16 FT

NORTH

CODE FLOOR PLAN LEGEND

123 LF TOTAL EXIT T.D. — DENOTES MAXIMUM EXIT TRAVEL DISTANCE

EXIT

FEC: RECESSED FIRE EXTINGUISHER CABINET
FE: WALL MOUNTED FIRE EXTINGUISHER CLASS A TYPE FE UNLESS NOTED OTHERWISE

ROOM NAME
101
150 SF
ROOM TAG

CODE REQUIRED SIGNAGE, AS NOTED ON PLAN

123 LF TOTAL EXIT T.D. — DENOTES MAXIMUM EXIT TRAVEL DISTANCE

00 OCC. — OCCUPANT LOAD

FEC — RECESSED FIRE EXTINGUISHER CABINET

CODE REQUIRED SIGNAGE, AS NOTED ON PLAN

CODE SUMMARY

Project Name: **NISQUALLY STATE PARK - STORAGE FACILITY**

Address: Mashel Prairie Rd, Eatonville, WA 98328
N 563911.595 & E 183708.514

Jurisdiction: Pierce County

Codes Referenced:

International Building Code (IBC):	2021 Edition
International Mechanical Code (IMC):	2021 Edition
Uniform Plumbing Code (UPC):	2021 Edition
International Fire Code (UFC):	2021 Edition
National Electric Code (NFPA 70)	2021 Edition; RCW 19.28
Accessible & Usable Buildings & Facilities (ICC/ANSI A117.1)	2021 Edition
Washington State Building Code (IBC):	WAC 51-50
Washington State Mechanical Code (IMC):	WAC 51-52
Washington State Fire Code (IFC):	WAC 51-54A
Washington State Energy Code (WSEC):	WAC 51-11C
Washington State Department of Health	WAC 246-322

All Amendments, Supplements, Modifications, Exclusions, Exceptions, And Additions To The Codes Listed Above As Adopted By The Washington State Building Code Council RCW 19.27 And WAC Title 51.

Pierce County Design Requirements

1. Design Wind Speed: 110 MPH
2. Wind Exposure: B
3. Seismic Design Category: II
4. Roof Snow Load: 35 PSF
5. Frost Line Depth: 24"
6. GEOTECHNICAL Investigation Report/Soil Bearing Capacity = 3000 PSF

Deferred Submittals:
Pre-manufactured Metal Building System

Fire Sprinklers: None Proposed

Occupancies (Chapters 3 and 4):S-1

Type Of Construction (Chapters 5 and 6): V-B

Incidental Uses (Chapter 5 and Section 509): None

Number of Stories Allowed (Chapter 5 and Table 504.4):
For S-1 Occupancy in Const'n Type VB (NS) = 1; Actual = 1

Building Height (Chapter 5, Table 504.3):
For S-1 Occupancy in Const'n Type VB (NS) = 40 feet; Actual = 29 feet 6 inches

Actual Area: **3,981 SF** (IBC Floor Area - Not including exterior wall thickness)
4,034 SF (Including Exterior Wall Thickness)

Allowable Area: For S-1 Occupancy in Construction Type VB (NS) : 9,000 SF

Actual Area of Building = 4,034 SF, therefore OK.

Fire Resistive Requirements (Chapters 6 and 7, Table 601):

Rating (hours):

Building Element	
Structural Frame (Table 601):	0
Floors & Floor Ceilings (Table 601):	0
Roofs & Roof Ceilings (Table 601):	0
Exterior Bearing Walls (Table 601):	0
Interior Bearing Walls (Table 601):	0
Exterior Non-Bearing Walls (Table 602):	0
Interior Non-Bearing Walls (Table 601):	0
Shafts (Section 713):	N/A
Exit Access Stairways and Ramps (Section 1019):	N/A
Corridors (Section 1020):	N/A
Fire Walls (Section 706):	N/A
Fire Barriers (Section 707):	N/A
Fire Partitions (Section 708):	N/A
Smoke Barriers (Section 709):	N/A
Horizontal Assemblies (Section 711):	N/A
Vertical Openings (Section 712):	N/A
Shaft Enclosures (Section 713):	N/A

Exit Requirements:

Code Occupant Load Calculation For Exiting Design (1004):
Warehouses - 1 occ. per 500 SF: 2,618 SF / 500 = 6 OCCUPANTS
Storage - 1 occ. per 300 SF: 1,006 SF/ 300 = 4 OCCUPANTS
Incidental Accessory - 1 occ. per 100 sf: 130 SF/ 100 = 2 OCCUPANTS
TOTAL OCCUPANTS = 12 OCCUPANTS

Number of Exits (Section 1006):

Design Occupant Load	Required	Provided
12	1	2

Exit Access Travel Distance (Table 1017.2):

Occupancy	Maximum Allowed	Maximum Actual
S-1	200	58'-8"

Common Path Of Egress Travel (Section 1006.2.1)

Occupancy	Maximum Allowed	Maximum Actual
S-1	75	0 (N/A)

Exit Passageways (Section 1023): None

Horizontal Exits (Section 1025): None

Washington State Energy Code - 2021 Edition

Code Compliance:
C402.1.1 Low Energy Space
This building is intended to be an un-occupied storage facility and is therefore an unconditioned space.
Reference Env-Chk Forms for compliance.

Plumbing Fixture Requirements (Chapter 29 of WA. ST. Amendments):

Water Closet Requirements (IBC): 1 per 10.
Lavatory Requirements (IBC): 1 per 10.
Bathtub/Shower Requirements (IBC): 1 per 8.

Fixture Calculation:
12 Occupants

Provided	Required
1 water closets	1 water closets
1 lavatories	1 lavatories
1 shower	1 shower

Call 811 two business days before you dig

SHEET 42 OF 226

BID SET

CAD NO.

NO.	REVISIONS	INT.	APP.	DATE
1	Permit Comments			01-11-2020

ACTION	BY	DATE
DESIGNED		01/03/2025
DRAWN		01/03/2025
CHECKED (FIELD)		
CHECKED (HDQTS.)		

10347 REGISTERED ARCHITECT
JAMES HILL
STATE OF WASHINGTON

REGISTERED STAMP

WASHINGTON STATE PARKS AND RECREATION COMMISSION

NISQUALLY STATE PARK

PHASE 3A MAINTENANCE BUILDING AND WWTF

GENERAL CODE INFORMATION

GI201

SCALE
AS SHOWN

PARKS FILE#

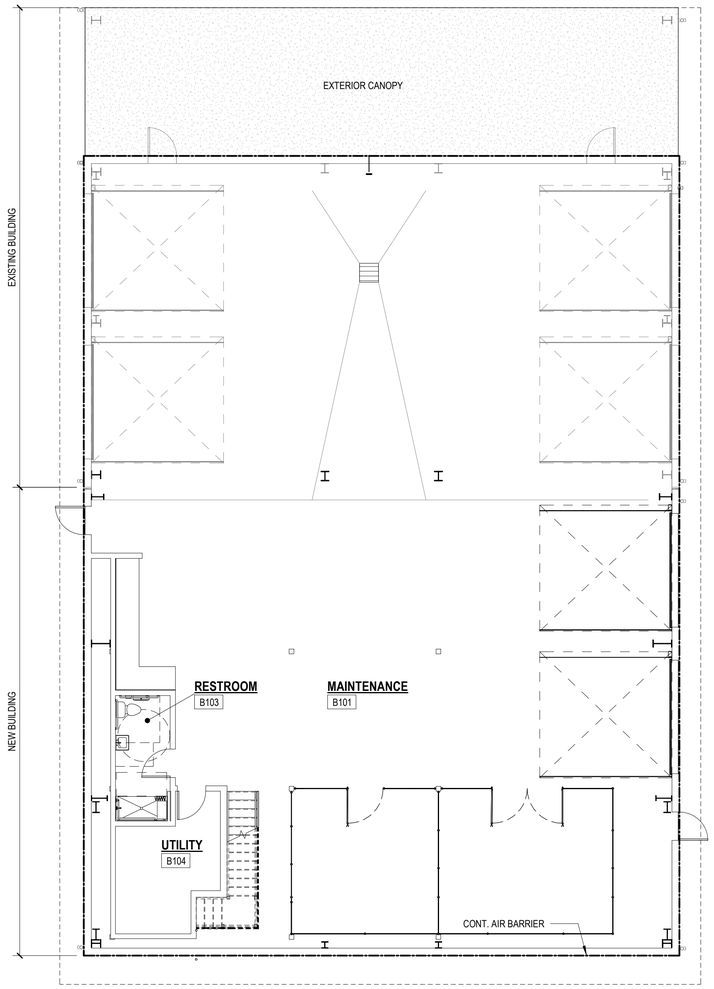

1 FIRST FLOOR PLAN - AIR BARRIER
1/8" = 1'-0"
0 4 8 16 FT
NORTH

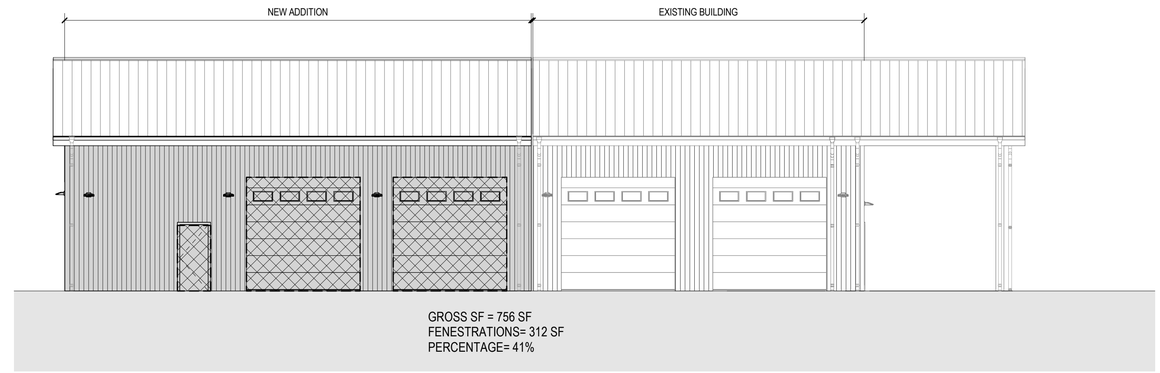

A MAINTENANCE BUILDING - EAST ELEVATION
1/8" = 1'-0"
0 4 8 16 FT

B MAINTENANCE BUILDING - WEST ELEVATION
1/8" = 1'-0"
0 4 8 16 FT

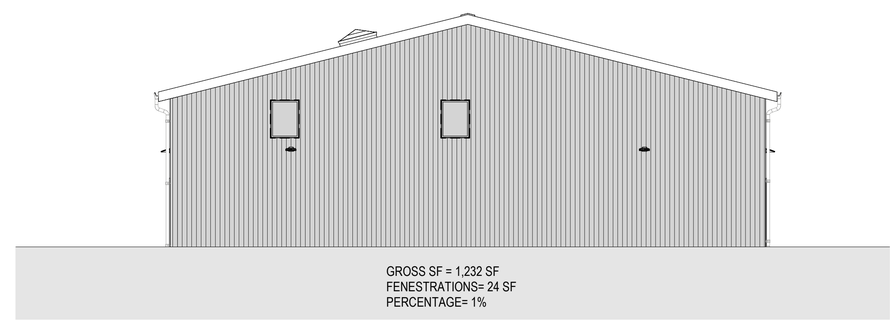

C MAINTENANCE BUILDING - SOUTH ELEVATION
1/8" = 1'-0"
0 4 8 16 FT

AIR BARRIER FLOOR PLAN NOTES

1. SEAL ALL HOLES AND GAPS IN AIR BARRIER SYSTEM TO PROVIDE AN AIRTIGHT INSTALLATION.
2. THE CONCRETE SLAB, SLAB ON GRADE IS ASSUMED TO PROVIDE ADEQUATE AIR BARRIER PERFORMANCE. (SEAL ALL PENETRATIONS)
3. REFER TO DOOR, WINDOW AND LOUVER DETAILS FOR ADDITIONAL AIR BARRIER SYSTEM AND WEATHER RESISTANT BARRIER DETAILS.
4. ENSURE THAT ALL AIR BARRIER SYSTEMS ARE SEALED TIGHT TO EACH OTHER AT ALL TRANSITIONS, FENESTRATION OPENINGS AND JOINTS.

INSULATION VALUES:
THE FOLLOWING MINIMUM INSULATION VALUES SHALL BE:
1. SLAB PERIMETER: R-10 @ NON-HEATED SLABS & FOR 24 INCHES BEYOND

AIR BARRIER FLOOR PLAN LEGEND

—·—·—·—·— EXTENTS OF CONTINUOUS AIR BARRIER SYSTEM

WSEC- AIR BARRIER CODE

C402.5.1.1 AIR BARRIER CONSTRUCTION. THE CONTINUOUS AIR BARRIER SHALL BE CONSTRUCTED TO COMPLY WITH THE FOLLOWING:

1. THE AIR BARRIER SHALL BE CONTINUOUS FOR ALL ASSEMBLIES THAT ARE THE THERMAL ENVELOPE OF THE BUILDING AND ACROSS THE JOINTS AND ASSEMBLIES.
2. AIR BARRIER JOINTS AND SEAMS SHALL BE SEALED, INCLUDING SEALING TRANSITIONS IN PLACES AND CHANGES IN MATERIALS. THE JOINTS AND SEALS SHALL BE SECURELY INSTALLED IN OR ON THE JOINT FOR ITS ENTIRE LENGTH SO AS NOT TO DISLODGE, LOOSEN OR OTHERWISE IMPAIR ITS ABILITY TO RESIST POSITIVE AND NEGATIVE PRESSURE FROM WIND, STACK EFFECT AND MECHANICAL VENTILATION.
3. PENETRATIONS OF THE AIR BARRIER SHALL BE CAULKED, GASKETED OR OTHERWISE SEALED IN A MANNER COMPATIBLE WITH THE CONSTRUCTION MATERIALS AND LOCATION. JOINTS AND SEALS ASSOCIATED WITH PENETRATIONS SHALL BE SEALED IN THE SAME MANNER OR TAPED OR COVERED WITH MOISTURE VAPOR-PERMEABLE WRAPPING MATERIAL. SEALING MATERIALS SHALL BE APPROPRIATE TO THE CONSTRUCTION MATERIALS BEING SEALED AND SHALL BE SECURELY INSTALLED AROUND THE PENETRATIONS SO AS NOT TO DISLODGE, LOOSEN OR OTHERWISE IMPAIR THE PENETRATIONS' ABILITY TO RESIST POSITIVE AND NEGATIVE PRESSURE FROM WIND, STACK EFFECT, AND MECHANICAL VENTILATION. SEALING OF CONCEALED FIRE SPRINKLERS, WHERE REQUIRED, SHALL BE IN A MANNER THAT IS RECOMMENDED BY THE MANUFACTURER. CAULKING OR OTHER ADHESIVE SEALANTS SHALL NOT BE USED TO FILL VOIDS BETWEEN FIRE SPRINKLER COVER PLATES AND WALLS OR CEILINGS.
4. RECESSED LIGHTING FIXTURES SHALL COMPLY WITH SECTION C402.5.8. WHERE SIMILAR OBJECTS ARE INSTALLED WHICH PENETRATE THE AIR BARRIER, PROVISIONS SHALL BE MADE TO MAINTAIN THE INTEGRITY OF THE AIR BARRIER.
5. CONSTRUCTION DOCUMENTS SHALL CONTAIN A DIAGRAM SHOWING THE BUILDING'S PRESSURE BOUNDARY IN PLAN(S) AND SECTION(S) AND A CALCULATION OF THE AREA OF THE PRESSURE BOUNDARY TO BE CONSIDERED IN THE TEST.

BID SET

Call 811 two business days before you dig

SHEET 43 OF 226

CAD NO.

NO.	REVISIONS	INT.	APP.	DATE
				01-11-2020

ACTION	BY	DATE
DESIGNED		01/03/2025
DRAWN		01/03/2025
CHECKED (FIELD)		
CHECKED (HDQTS.)		

10347 REGISTERED ARCHITECT
JAMES HILL
STATE OF WASHINGTON

REGISTERED STAMP

WASHINGTON STATE PARKS AND RECREATION COMMISSION

NISQUALLY STATE PARK

PHASE 3A MAINTENANCE BUILDING AND WWTF

AIR BARRIER

GI301

SCALE
AS SHOWN

PARKS FILE#

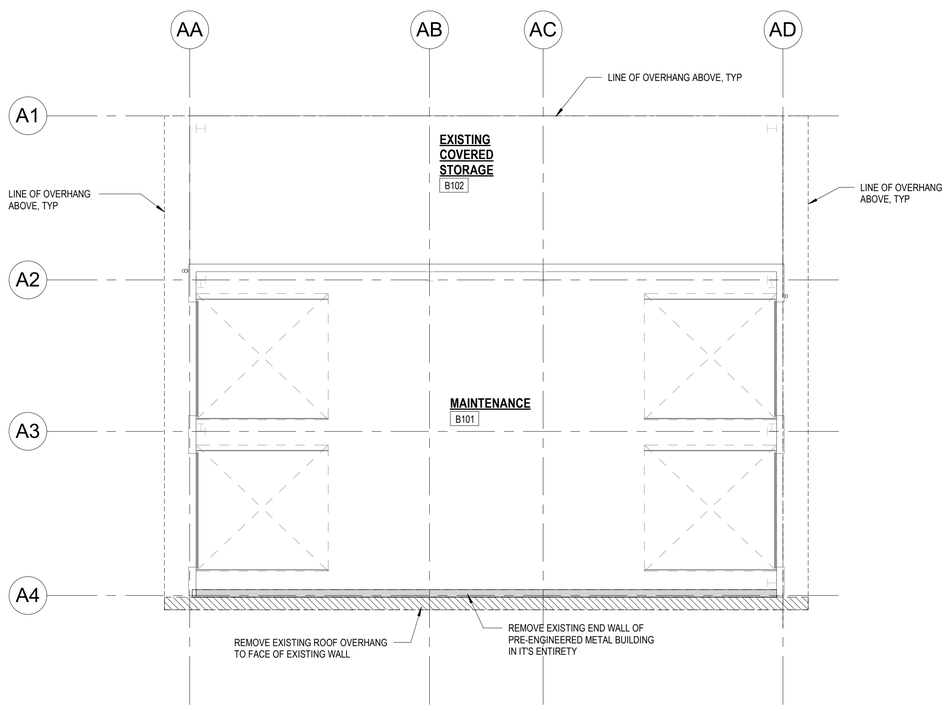

1 REFERENCE DEMOLITION FLOOR PLAN
1/8" = 1'-0"

0 4 8 16 FT

NORTH

GENERAL DEMO NOTES

GENERAL NOTES:

1. REFER TO STRUCTURAL SLAB PLANS FOR RECESSED CONCRETE LOCATIONS TO PROVIDE FLOOR SLOPES.
2. FOR DOOR & WINDOW TYPES AND FINISH SCHEDULE, REFER TO A-600 SERIES.
3. FOR DETAILS AND MOUNTING HEIGHTS REFER TO DETAIL SHEETS.
4. FLOOR DRAIN (FD) - SET FLOOR DRAINS 1" BELOW FF @ ALL AREAS.
5. FOR PLUMBING FIXTURES REFER TO MECHANICAL DRAWINGS.
6. ALL DOORS NOT DIMENSIONED ARE LOCATED AT 4 1/2" TO AN INTERSECTING WALL FACE OF FINISH OR CENTERED ON WALL (REFER TO PLAN).
7. PROVIDE HORIZONAL LOUVER BLINDS AT ALL WINDOWS & STOREFRONTS, NEW AND EXISTING, UON.
8. PROVIDE ROLLER WINDOW SHADES AT GLAZING AT ALL DOORS & SIDELIGHTS, NEW AND EXISTING, UNLESS NOTED OTHERWISE ON FLOOR PLANS.
9. MINIMIZE DAMAGE TO EXISTING WORK TO REMAIN. RESTORE DAMAGED SURFACES PER SPEC.
10. MAINTAIN EXISTING WORK IN WATERTIGHT CONDITION DURING CONSTRUCTION.
11. OBTAIN ALL PERMITS & LICENSES.
12. COORDINATE WITH THE AUTHORITY HAVING JURISDICTION FOR REQUIRED APPROVALS.

LEGEND - DEMO FLOOR PLAN

DEMO WALL

EXISTING WALL

CONCRETE WALKING PAD

BID SET

Call 811 two business days before you dig

SHEET 44 OF 226

CAD NO.

NO.	REVISIONS	INT.	APP.	DATE
				01-11-2020

ACTION	BY	DATE
DESIGNED		01/03/2025
DRAWN		01/03/2025
CHECKED (FIELD)		
CHECKED (HDQTS.)		

10347 REGISTERED ARCHITECT
JAMES HILL
STATE OF WASHINGTON

REGISTERED STAMP

WASHINGTON STATE PARKS AND RECREATION COMMISSION

NISQUALLY STATE PARK

PHASE 3A MAINTENANCE BUILDING AND WWTF

REFERENCE DEMOLITION FLOOR PLAN

AD-101

SCALE
AS SHOWN

PARKS FILE#

ROOF PLAN NOTES

1. ALL FLASHING INSTALLATIONS TO BE IN CONFORMANCE WITH THE CURRENT EDITION OF THE "SMACNA" (SHEET METAL AND AIR CONDITIONING CONTRACTOR'S NATIONAL ASSOCIATION, INC.). ARCHITECTURAL SHEET METAL MANUAL AND FLASHING MANUFACTURER'S RECOMMENDATIONS, CONSISTENT WITH DETAILS HEREIN, AS APPROVED, SUBMIT SHOP DRAWINGS FOR ALL CONDITIONS.
2. REFER TO ELECTRICAL AND MECHANICAL DRAWINGS FOR ROOF EQUIPMENT AND MISCELLANEOUS PENETRATIONS, ETC. PROVIDE WEATHER TIGHT SEAL AND FLASHINGS.

LEGEND - DEMO ROOF PLAN

- DEMO WALL
- EXISTING WALL
- DEMO GUTTER
- CONCRETE WALKING PAD
- EXISTING SKYLIGHT
- R1 — ROOF TAG

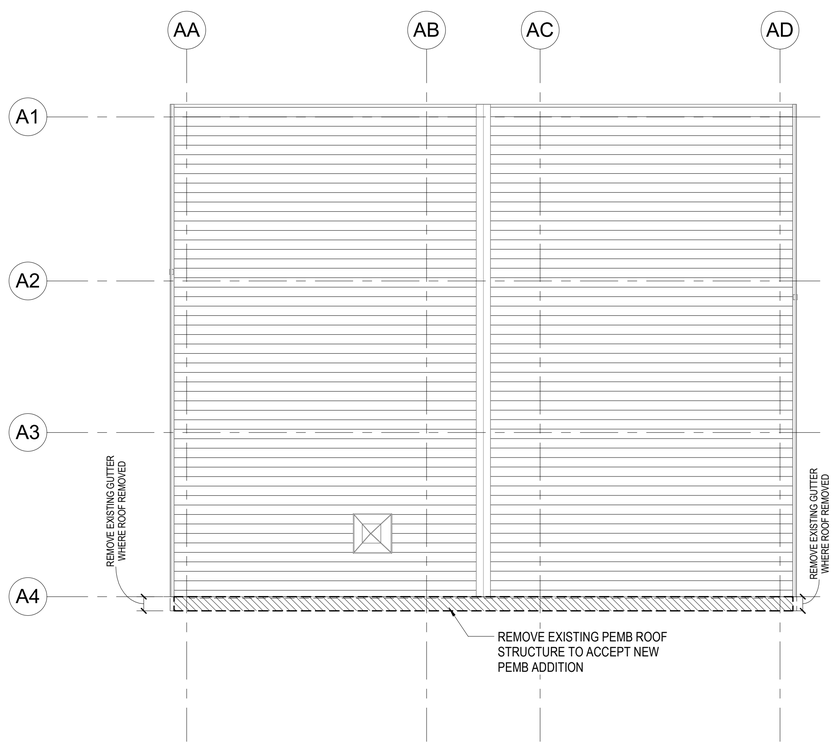

1 REFERENCE DEMOLITION ROOF PLAN
1/8" = 1'-0"

0 4 8 16 FT

NORTH

Call 811 two business days before you dig

SHEET 45 OF 226

BID SET

CAD NO.

NO.	REVISIONS	INT.	APP.	DATE
				01-11-2020

ACTION	BY	DATE
DESIGNED		01/03/2025
DRAWN		01/03/2025
CHECKED (FIELD)		
CHECKED (HDQTS.)		

10347 REGISTERED ARCHITECT
JAMES HILL
STATE OF WASHINGTON

REGISTERED STAMP

WASHINGTON STATE PARKS AND RECREATION COMMISSION

NISQUALLY STATE PARK

PHASE 3A MAINTENANCE BUILDING AND WWTF

REFERENCE DEMOLITION ROOF PLAN

AD-161

SCALE
AS SHOWN

PARKS FILE#

FLOOR PLAN GENERAL NOTES

DIMENSION NOTES:

1. FIELD CONFIRM ALL DIMENSIONS AND REPORT DISCREPANCIES, IF ANY, TO ARCHITECT PRIOR TO CONSTRUCTION.
2. DIMENSIONS ARE SHOWN TO FACE OF STUD, CENTERLINE OF OPENING AND ROUGH OPENING UON.
3. ALL FINISH FIXTURES AND ACCESSORY EQUIPMENT SHALL MEET ADA ACCESSIBILITY REQUIREMENTS PER IBC/UPC AND ANSI. 117.
4. REFER TO STRUCTURAL, MECHANICAL, AND ELECTRICAL DRAWINGS FOR ADDITIONAL DIMENSION REQUIREMENTS.

GENERAL NOTES:

1. REFER TO STRUCTURAL SLAB PLANS FOR RECESSED CONCRETE LOCATIONS TO PROVIDE FLOOR SLOPES.
2. FOR DOOR & WINDOW TYPES AND FINISH SCHEDULE, REFER TO A-600 SERIES.
3. FOR DETAILS AND MOUNTING HEIGHTS REFER TO DETAIL SHEETS.
4. FLOOR DRAIN (FD) - SET FLOOR DRAINS 1" BELOW FF @ ALL AREAS.
5. FOR PLUMBING FIXTURES REFER TO MECHANICAL DRAWINGS.
6. ALL DOORS NOT DIMENSIONED ARE LOCATED AT 4 1/2" TO AN INTERSECTING WALL FACE OF FINISH OR CENTERED ON WALL (REFER TO PLAN).
7. PROVIDE HORIZONAL LOUVER BLINDS AT ALL WINDOWS & STOREFRONTS, NEW AND EXISTING, UON.
8. PROVIDE ROLLER WINDOW SHADES AT GLAZING AT ALL DOORS & SIDELIGHTS, NEW AND EXISTING, UNLESS NOTED OTHERWISE ON FLOOR PLANS.
9. MINIMIZE DAMAGE TO EXISTING WORK TO REMAIN. RESTORE DAMAGED SURFACES PER SPEC.
10. MAINTAIN EXISTING WORK IN WATERTIGHT CONDITION DURING CONSTRUCTION.
11. OBTAIN ALL PERMITS & LICENSES.
12. COORDINATE WITH THE AUTHORITY HAVING JURISDICTION FOR REQUIRED APPROVALS.
13. FOR CODE ANALYSIS SEE "G1-201" SHEETS.

FLOOR PLAN LEGEND

- PER MANUFACTURER WALL, UON
- EXISTING WALL
- DOOR, REFER TO DOOR SCHEDULE
- EXISTING DOOR
- 8X8 STRUCTURAL TIMBER COLUMN, REFER TO STRUCT
- STRUCTURAL COLUMN, REFER TO STRUCT
- LIGHTING, REFER TO ELECT
- EXISTING LIGHTING, REFER TO ELECT

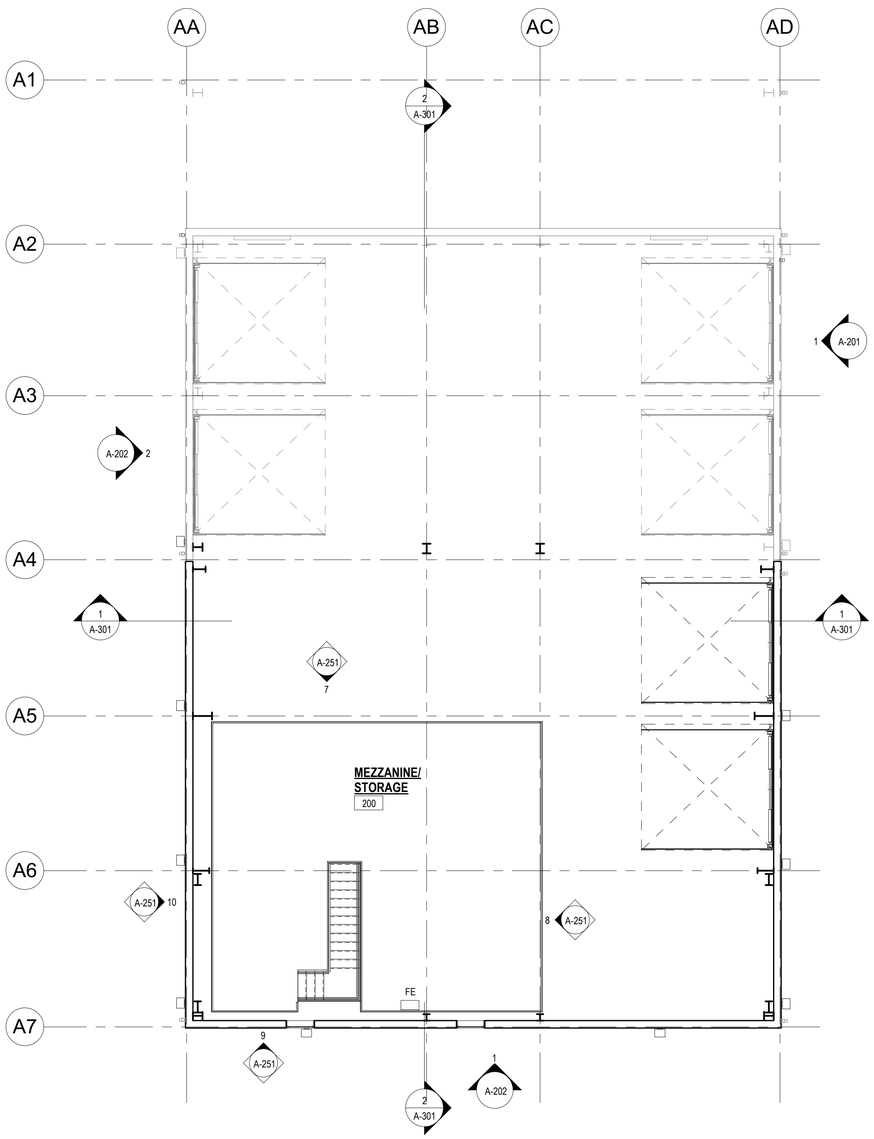

2 MAINTENANCE BUILDING - SECOND FLOOR PLAN
1/8" = 1'-0"

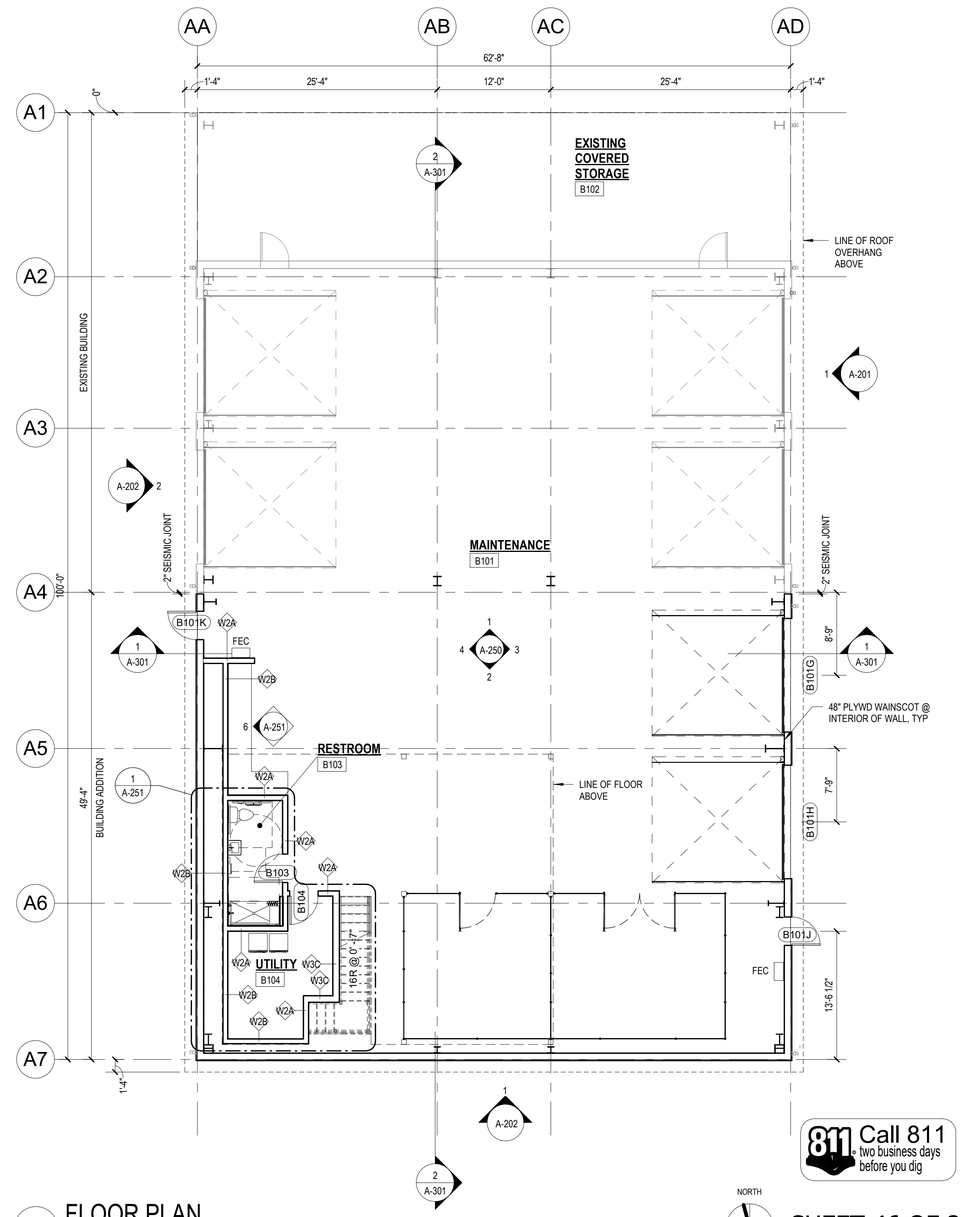

1 FLOOR PLAN
1/8" = 1'-0"

0 4 8 16 FT

NORTH

Call 811 two business days before you dig

SHEET 46 OF 226

BID SET

CAD NO.

NO.	REVISIONS	INT.	APP.	DATE
				01-11-2020

ACTION	BY	DATE
DESIGNED		01/03/2025
DRAWN		01/03/2025
CHECKED (FIELD)		
CHECKED (HDQTS.)		

10347 REGISTERED ARCHITECT
JAMES HILL
STATE OF WASHINGTON

REGISTERED STAMP

WASHINGTON STATE PARKS AND RECREATION COMMISSION

NISQUALLY STATE PARK

PHASE 3A MAINTENANCE BUILDING AND WWTF

REFERENCE FLOOR PLAN

A-101

SCALE
AS SHOWN

PARKS FILE#

REFLECTED CEILING PLAN NOTES

1. ARCHITECTURAL RCP PROVIDED FOR COORDINATION PURPOSES ONLY. REFER TO MECHANICAL, ELECTRICAL AND PLUMBING DRAWINGS FOR DETAILED SCOPE OF SYSTEMS. NOTIFY ARCHITECT OF ANY DISCREPANCIES PRIOR TO CONSTRUCTION.
2. CEILING HEIGHTS ARE FROM FINISH FLOOR UON.
3. PROVIDE ADDITIONAL EDGE BLOCKING, CROSS BRACING & SUSPENDED SUPPORT WIRES OR ADDITIONAL FURRING FOR CEILING MOUNTED ITEMS (LIGHTING, ACCESS PANELS, GRILLES, CAMERAS, ETC.)
4. THESE GENERAL NOTES APPLY TO ALL REFLECTED CEILING PLANS.
5. TYPICAL CEILING HEIGHT TO BE 8'-0", UON.
6. ALIGN SOFFITS WITH FACE OF ADJACENT WALL, UON
7. NOT ALL LIGHTING, INCLUDING PENDANT AND WALL MOUNTED LIGHT FIXTURES, SHOWN. SEE ELECTRICAL.
8. OTS = OPEN TO STRUCTURE. PAINT ALL EXPOSED CEILING/ROOF STRUCTURE, UON.
9. PAINT ALL GWB CEILINGS & SOFFITS PT-1, UON. (SEE FINISH SCHEDULE)
10. INTERIOR WALLS ARE TYPICALLY 6" ABOVE CEILING HEIGHT SHOWN UNLESS NOTED OTHERWISE ON ARCHITECTURAL OR STRUCTURAL DRAWINGS (i.e. SHEAR WALLS, SMOKE BARRIER WALLS, SOUND BARRIER WALLS, MECHANICAL ZONE WALLS).
11. COORDINATE LOCATION OF CEILING ACCESS DOORS WITH MECHANICAL & ELECTRICAL CONTRACTORS.

REFLECTED CEILING PLAN LEGEND

- EXISTING LIGHTING - REFER TO ELECTRICAL
- LIGHTING - REFER TO ELECTRICAL
- EXISTING LIGHTING - REFER TO ELECTRICAL
- LIGHTING - REFER TO ELECTRICAL
- EXISTING SKY LIGHT
- SKY LIGHT

CEILING TYPES

CEILING TYPES: XX TYPE / X' - X" HEIGHT

- GWB — GYPSUM WALL BOARD
- OTS — OPEN TO STRUCTURE

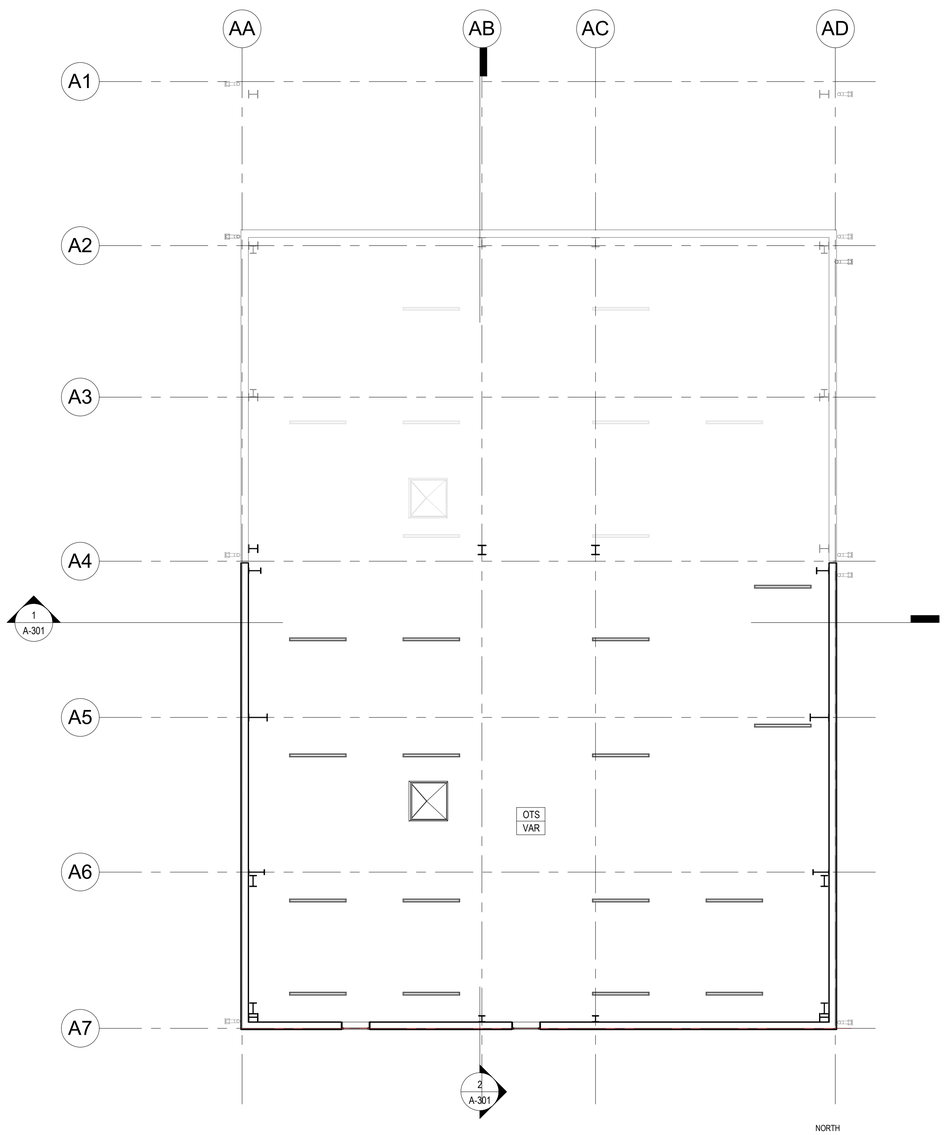

2 LEVEL 2 - RCP
1/8" = 1'-0"

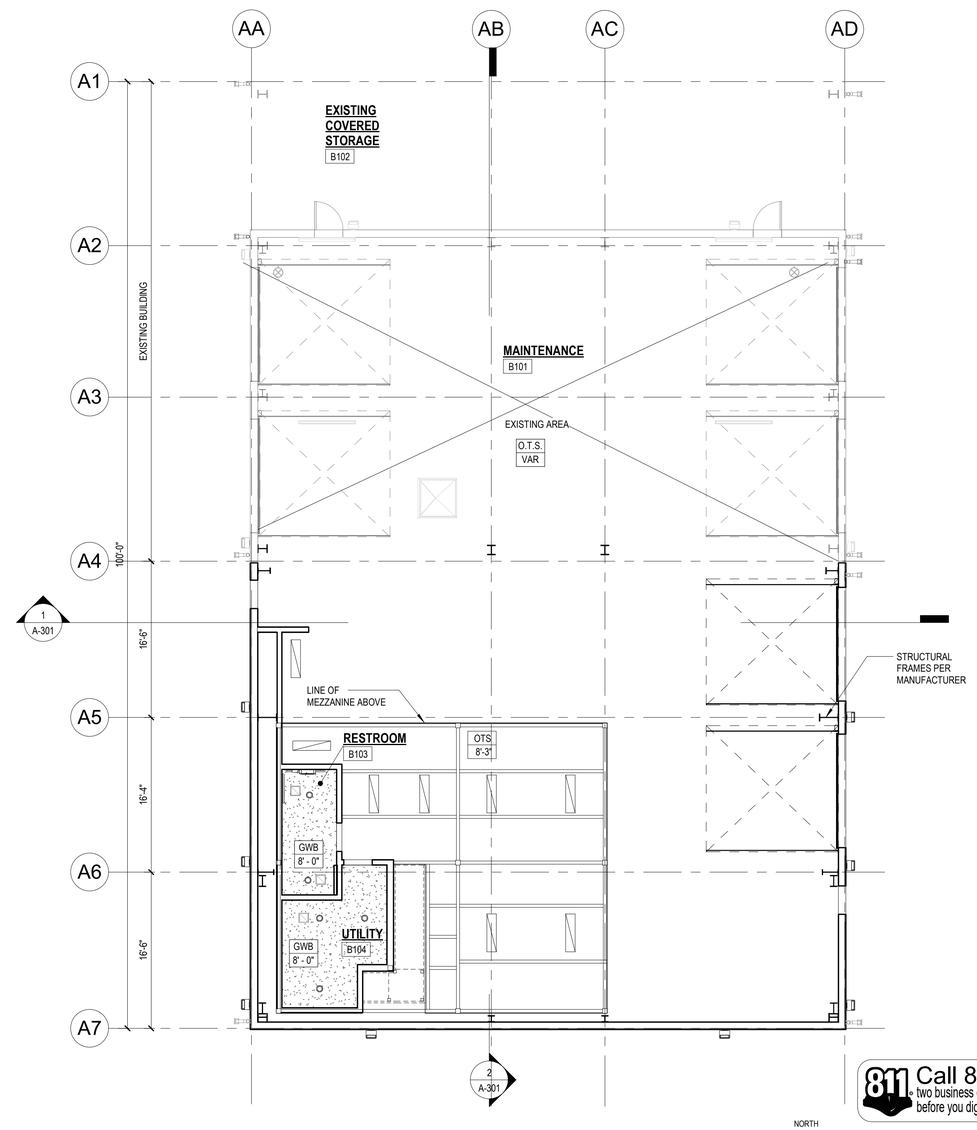

1 1ST FLOOR REFLECTED CEILING PLAN
1/8" = 1'-0"

0 4 8 16 FT

NORTH

Call 811 two business days before you dig

BID SET

SHEET 47 OF 226

CAD NO.		
01-11-2020		DATE
		APP.
		INT.
		REVISIONS
		NO.

ACTION	BY	DATE
DESIGNED		01/03/2025
DRAWN		01/03/2025
CHECKED (FIELD)		
CHECKED (HDQTS.)		

10347 REGISTERED ARCHITECT
JAMES HILL
STATE OF WASHINGTON

REGISTERED STAMP

WASHINGTON STATE PARKS AND RECREATION COMMISSION

NISQUALLY STATE PARK

PHASE 3A MAINTENANCE BUILDING AND WWTF

REFLECTED CEILING PLAN

A-151

SCALE
AS SHOWN

PARKS FILE#

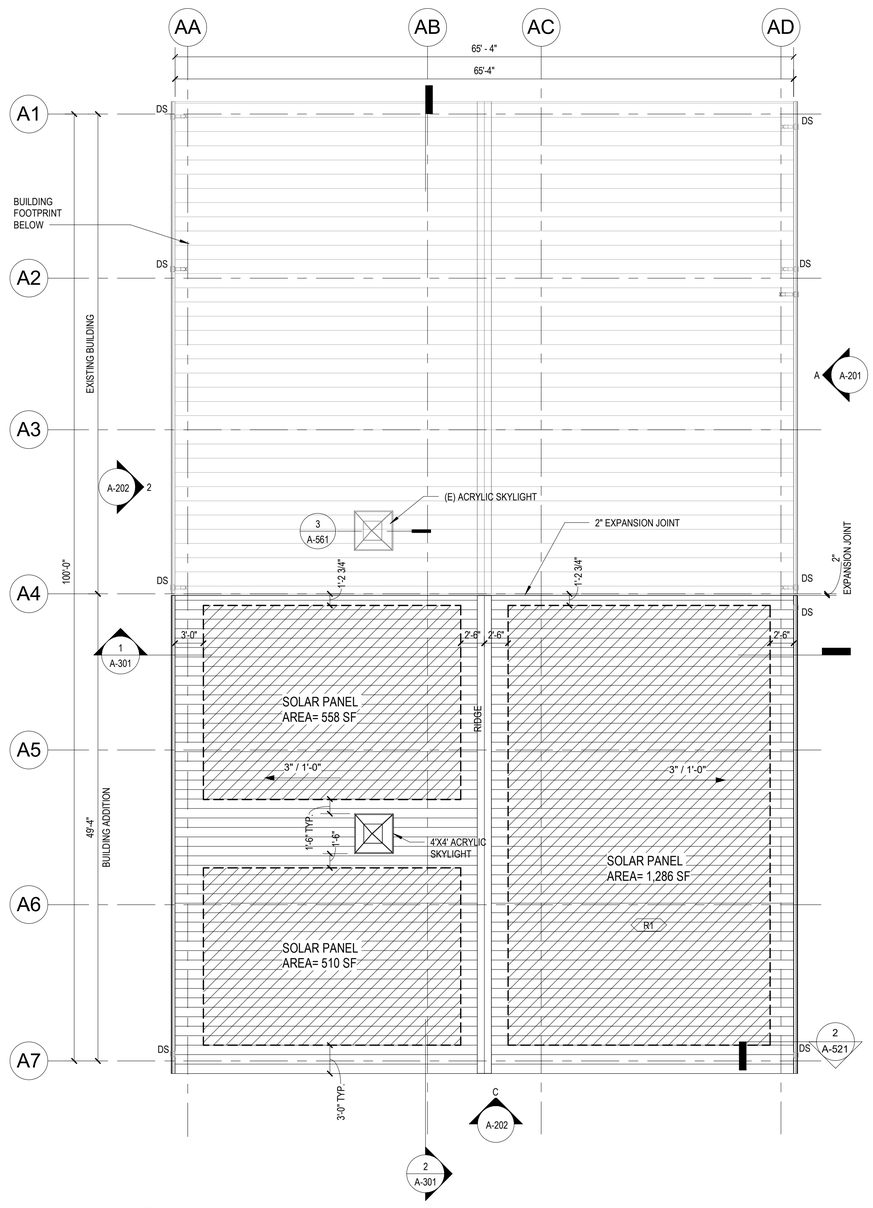

1 ROOF PLAN
1/8" = 1'-0"

0 4 8 16 FT

NORTH

SOLAR PANEL ZONE COMBINED CALCULATIONS:

MAINTENANCE BUILDING
ROOF AREA 3,312 SF/ 40%= 1,325 SF

WASTE WATER TREATMENT PLANT
ROOF AREA 1,701 SF / 40% = 681 SF

PUMP HOUSE
ROOF AREA 865 SF/ 40% = 346 SF

COMBINED ROOF AREA REQUIRED = 2,352 SF
COMBINED ROOF AREA PROVIDED = 2,354 SF

ROOF PLAN NOTES

1. ALL FLASHING INSTALLATIONS TO BE IN CONFORMANCE WITH THE CURRENT EDITION OF THE "SMACNA" (SHEET METAL AND AIR CONDITIONING CONTRACTOR'S NATIONAL ASSOCIATION, INC.). ARCHITECTURAL SHEET METAL MANUAL AND FLASHING MANUFACTURER'S RECOMMENDATIONS, CONSISTENT WITH DETAILS HEREIN, AS APPROVED, SUBMIT SHOP DRAWINGS FOR ALL CONDITIONS.
2. REFER TO ELECTRICAL AND MECHANICAL DRAWINGS FOR ROOF EQUIPMENT AND MISCELLANEOUS PENETRATIONS, ETC. PROVIDE WEATHER TIGHT SEAL AND FLASHINGS.

GEN NOTES - ROOF PLAN

1. COORDINATE PENETRATIONS W/ MECH DRAWINGS.
2. FABRICATE FLASHING FROM SPECIFIED SHEET METAL PRODUCTS. HEM ALL EXPOSED EDGES 1/2". DO NOT INSTALL FASTENERS WITHIN MOVING LAPS.
3. INSTALL IN ACCORDANCE WITH LOCAL BUILDING CODES, SPECIFICATIONS AND DETAILS, AND MANUFACTURER'S INSTALLATION REQUIREMENTS, WHICHEVER ARE MORE STRINGENT.
4. COUNTER FLASHINGS SHALL EXTEND OVER BASE FLASHINGS A MINIMUM OF 4".
5. TWO BEADS OF POLYURETHANE SEALANT SHALL BE CONCEALED WITHIN ALL MOVING LAPS (BOTH HORIZONTAL AND VERTICAL LAP LEGS).
6. INSTALL FLASHING & COUNTERFLASHING @ BASEWALL CONDITIONS SUCH THAT THEY CAN BE REMOVED & RE-INSTALLED AT THE TIME OF FUTURE RE-ROOF.
7. GASKET SCREWS W/ NEOPRENE WASHER TO BE USED IN ALL EXPOSED CONDITIONS.
8. SHEET METAL FLASHING SHALL BE LAPPED SLOPE-SENSITIVE.
9. SHEET METAL FASTENERS SHALL BE INSTALLED AT NO GREATER THAN 24" O.C.
10. INSULATION TO BE INSTALLED IN ACCORDANCE WITH ASCE-7 (CURRENT EDITION) WITH INCREASED FASTENING AT CORNERS AND PERIMETERS.
11. MAINTAIN MINIMUM SLOPE OF 1/2":12 AT ALL CRICKETS.

LEGEND - ROOF PLAN

DS	DOWNSPOUT
SLOPE	SLOPE= 1/4" MINIMUM (DEPTH VARIES): COORDINATE WITH ROOF DETAILS
R#	ROOF TYPE. SEE SHEET A-502.
	48" X 48" SKYLIGHT
	AREA OF SOLAR PANEL ZONED AREA FOR FUTURE ROOF TOP SOLAR PANELS

Call 811 two business days before you dig

SHEET 48 OF 226

BID SET

CAD NO.

NO.	REVISIONS	INT.	APP.	DATE
				01-11-2020

ACTION	BY	DATE
DESIGNED		01/03/2025
DRAWN		01/03/2025
CHECKED (FIELD)		
CHECKED (HDQTS.)		

10347 REGISTERED ARCHITECT
JAMES HILL
STATE OF WASHINGTON

REGISTERED STAMP

WASHINGTON STATE PARKS AND RECREATION COMMISSION

NISQUALLY STATE PARK

PHASE 3A MAINTENANCE BUILDING AND WWTF

REFERENCE ROOF PLAN

A-161

SCALE
AS SHOWN

PARKS FILE#

EXTERIOR FINISH SCHEDULE					
MARK	DESCRIPTION	MANUFACTURER	MAKE / MODEL / SERIES	COLOR	NOTES
MF-1	PRE-MANUFACTURE METAL FLASHING	PRE-MANUFACTURE TBD	TBD	COLOR TO MATCH EXIISTING BUILDING	- -
MP-1	PRE-MANUFACTURE METAL PANEL	PRE-MANUFACTURE TBD	TBD	COLOR TO MATCH EXISTING BUILDING	- -
MR-1	PRE-MANUFACTURE METAL ROOFING	PRE-MANUFACTURE TBD	TBD	COLOR TO MATCH EXISTING BUILDING	- -

NOTES - EXTERIOR ELEVATION

1. ALL SHEET METAL AND MISC. METAL TO BE PRE-PAINTED. DO NOT PAINT STAINLESS STEEL.
2. WINDOW AND DOOR TRIM TO BE PAINTED - REFER TO FINISH SCHEDULE .

LEGEND - EXTERIOR ELEVATION

SSMR-1: STANDING SEAM METAL ROOF - SEE GENERAL ROOF PLAN NOTES

SHEET METAL SIDING - PER PEMB MANUFACTURER

1t WINDOW TAG

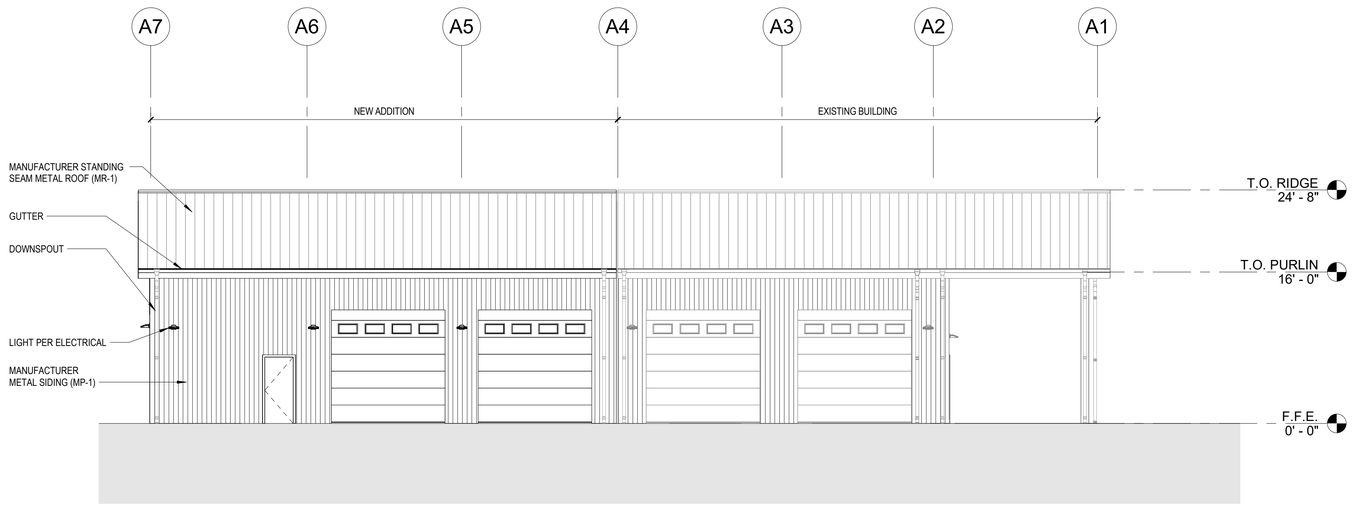

1 MAINTENANCE BUILDING - EAST ELEVATION
1/8" = 1'-0"

0 4 8 16 FT

Call 811 two business days before you dig

SHEET 49 OF 226

BID SET

CAD NO.

NO.	REVISIONS	INT.	APP.	DATE
				01-11-2020

ACTION	BY	DATE
DESIGNED		01/03/2025
DRAWN		01/03/2025
CHECKED (FIELD)		
CHECKED (HDQTS.)		

10347 REGISTERED ARCHITECT
JAMES HILL
STATE OF WASHINGTON

REGISTERED STAMP

WASHINGTON STATE PARKS AND RECREATION COMMISSION

NISQUALLY STATE PARK

PHASE 3A MAINTENANCE BUILDING AND WWTF

EXTERIOR ELEVATIONS

A-201

SCALE
AS SHOWN

PARKS FILE#

EXTERIOR FINISH SCHEDULE					
MARK	DESCRIPTION	MANUFACTURER	MAKE / MODEL / SERIES	COLOR	NOTES
MF-1	PRE-MANUFACTURE METAL FLASHING	PRE-MANUFACTURE TBD	TBD	COLOR TO MATCH EXIISTING BUILDING	- -
MP-1	PRE-MANUFACTURE METAL PANEL	PRE-MANUFACTURE TBD	TBD	COLOR TO MATCH EXISTING BUILDING	- -
MR-1	PRE-MANUFACTURE METAL ROOFING	PRE-MANUFACTURE TBD	TBD	COLOR TO MATCH EXISTING BUILDING	- -

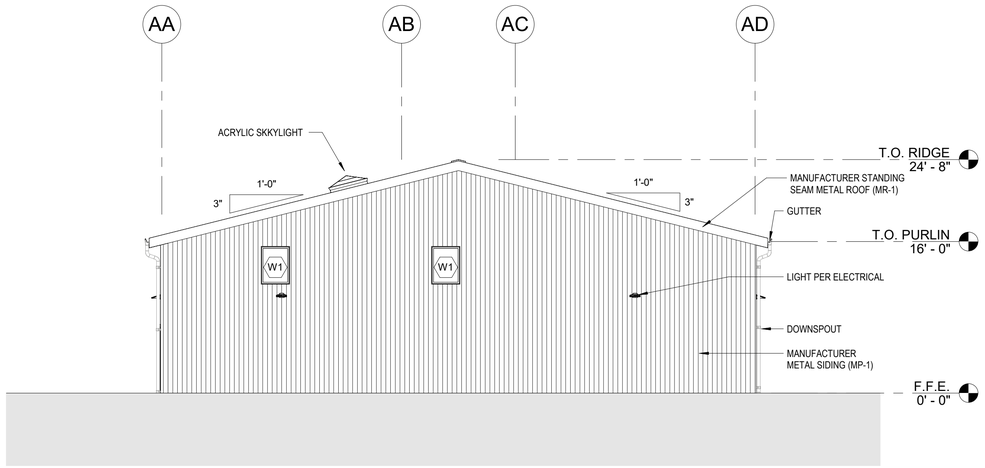

1 MAINTENANCE BUILDING - SOUTH ELEVATION
1/8" = 1'-0"

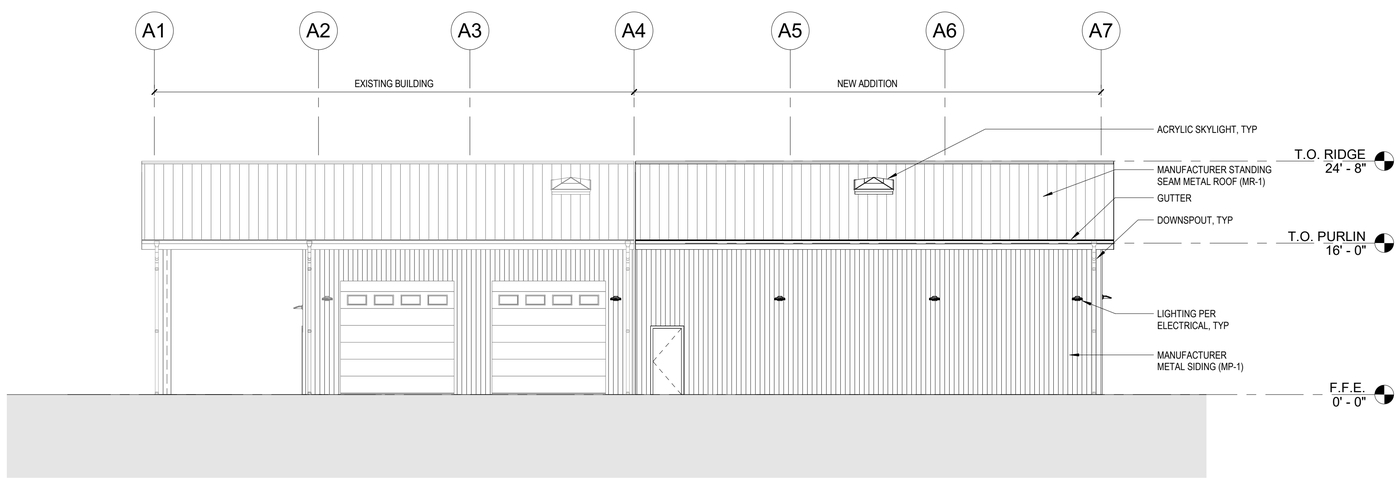

2 MAINTENANCE BUILDING - WEST ELEVATION
1/8" = 1'-0"

NOTES - EXTERIOR ELEVATION

1. ALL SHEET METAL AND MISC. METAL TO BE PRE-PAINTED. DO NOT PAINT STAINLESS STEEL.
2. WINDOW AND DOOR TRIM TO BE PAINTED - REFER TO FINISH SCHEDULE .

LEGEND - EXTERIOR ELEVATION

SSMR-1: STANDING SEAM METAL ROOF - SEE GENERAL ROOF PLAN NOTES

SHEET METAL SIDING - PER PEMB MANUFACTURER

1t WINDOW TAG

0 4 8 16 FT

Call 811 two business days before you dig

SHEET 50 OF 226

BID SET

CAD NO.

NO.	REVISIONS	DATE	APP.	INT.
		01-11-2020		

ACTION	BY	DATE
DESIGNED		01/03/2025
DRAWN		01/03/2025
CHECKED (FIELD)		
CHECKED (HDQTS.)		

10347 REGISTERED ARCHITECT
JAMES HILL
STATE OF WASHINGTON

REGISTERED STAMP

WASHINGTON STATE PARKS AND RECREATION COMMISSION

NISQUALLY STATE PARK

PHASE 3A MAINTENANCE BUILDING AND WWTF

EXTERIOR ELEVATIONS

A-202

SCALE
AS SHOWN

PARKS FILE#

TYPICAL MOUNTING HEIGHTS - UNLESS NOTED OTHERWISE

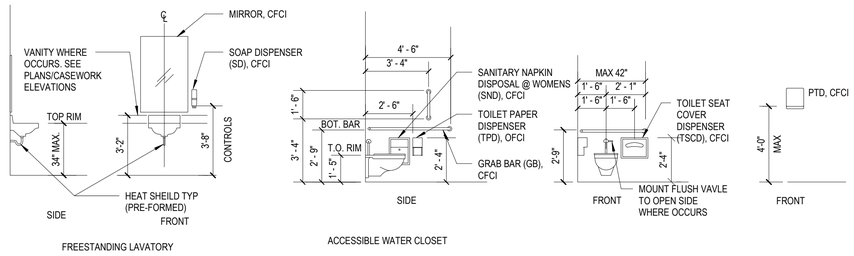

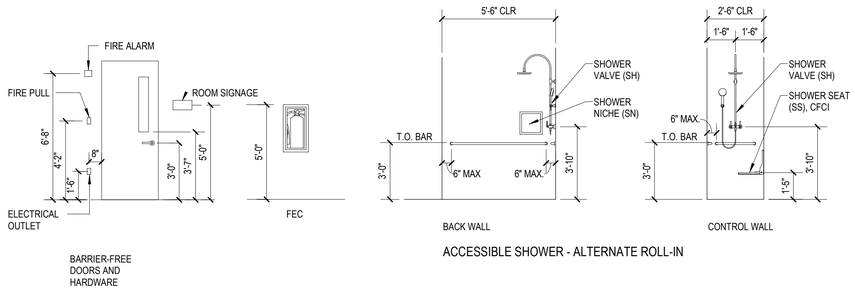

INTERIOR ELEVATION GENERAL NOTES

- REFER TO NEW FLOOR PLAN AND EQUIPMENT LEGEND. PROVIDE BACKING AS REQUIRED AND COORDINATE FINAL LOCATION WITH OWNER PRIOR TO COVER.
- ALL BACKSPLASHES TO BE FINISHED SAME AS COUNTERTOP (UON).
- DIMENSIONS FOR MOUNTING HEIGHTS ARE TO CENTER OF BOX AND TYPICAL (UON).
- ALL CONDITIONS ILLUSTRATED BELOW ARE TYPICAL, (UON).
- ALL SHELVES AND DIVIDERS ARE ADJUSTABLE, UNLESS NOTED OTHERWISE.
- FIELD VERIFY DIMENSIONS OF ALL FABRICATION. CONTACT ARCHITECT IF ANY DISCREPANCIES ARE FOUND BETWEEN DRAWINGS AND FIELD CONDITIONS
- ALL EXPOSED PLUMBING TO BE INSULATED
- REFER TO NEW FLOOR PLAN FOR ALL EMERGENCY POWER DESIGNATIONS
- REFER TO NEW FLOOR PLAN AND EQUIPMENT SCHEDULE FOR SPECIFIC REQUIREMENTS, SYSTEMS AND FINISHES. NOT ALL EQUIPMENT IS SHOWN IN ELEVATIONS.

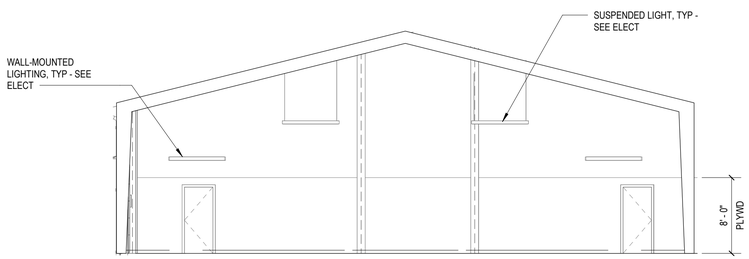

1 B101 MAINTENANCE BUILDING - NORTH (EXISTING)
1/8" = 1'-0"

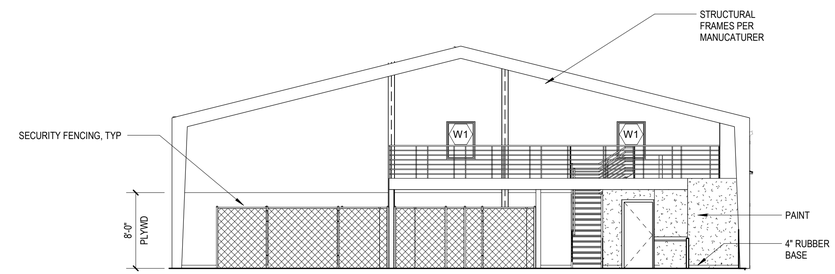

2 B101 MAINTENANCE BUILDING - SOUTH
1/8" = 1'-0"

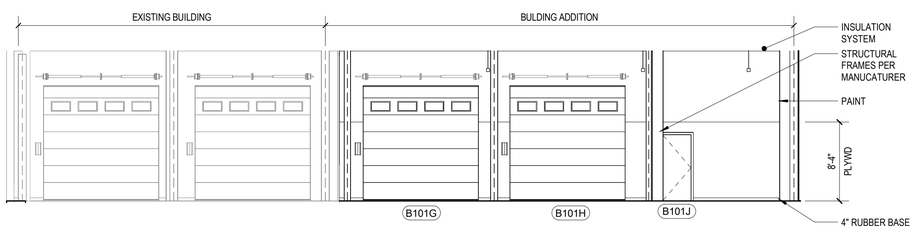

3 B101 MAINTENANCE BLDG - EAST
1/8" = 1'-0"

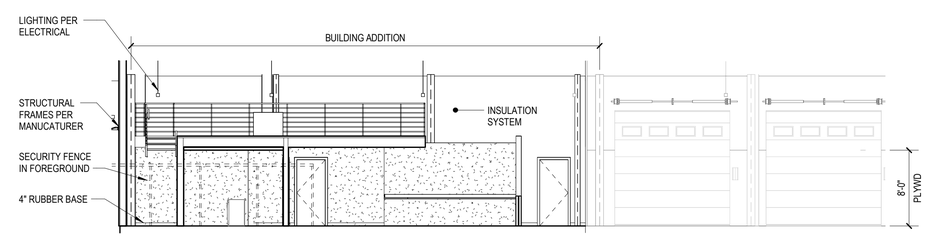

4 B101 MAINTENANCE BUILDING - WEST
1/8" = 1'-0"

Call 811 two business days before you dig

SHEET 51 OF 226

BID SET

CAD NO.		
01-11-2020		DATE
		APP.
		INT.
Permit Comments		REVISIONS
1		NO.

ACTION	BY	DATE
DESIGNED		01/03/2025
DRAWN		01/03/2025
CHECKED (FIELD)		
CHECKED (HDQTS.)		

10347 REGISTERED ARCHITECT JAMES HILL STATE OF WASHINGTON

REGISTERED STAMP

WASHINGTON STATE PARKS AND RECREATION COMMISSION

NISQUALLY STATE PARK

PHASE 3A MAINTENANCE BUILDING AND WWTF

INTERIOR ELEVATIONS

A-250

SCALE

AS SHOWN

PARKS FILE#

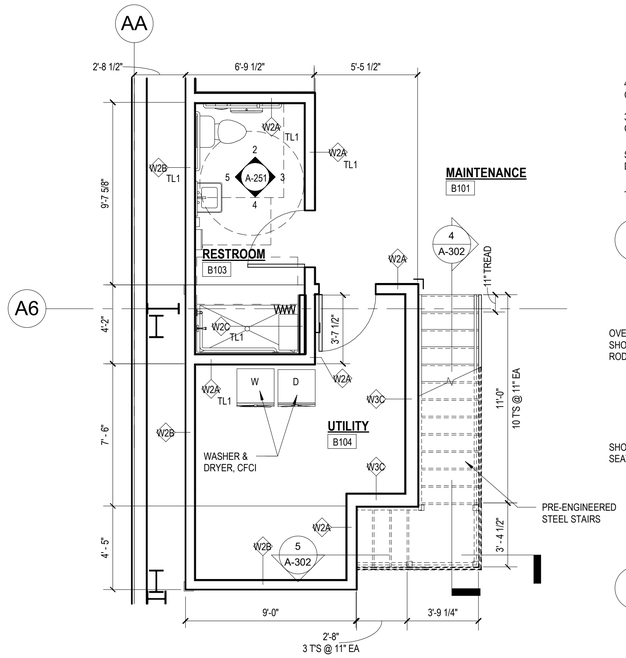

1 ENL FLOOR PLAN - RESTROOM
1/4" = 1'-0"

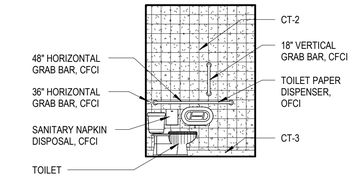

2 B103 RESTROOM - NORTH
1/4" = 1'-0"

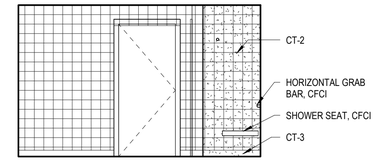

3 B103 RESTROOM - EAST
1/4" = 1'-0"

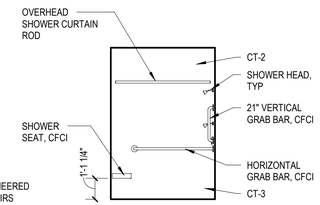

4 B103 RESTROOM - SOUTH
1/4" = 1'-0"

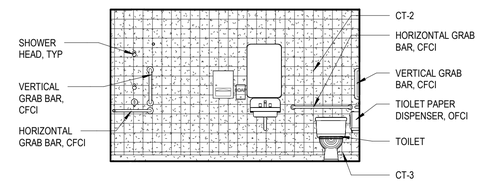

5 B103 RESTROOM - WEST
1/4" = 1'-0"

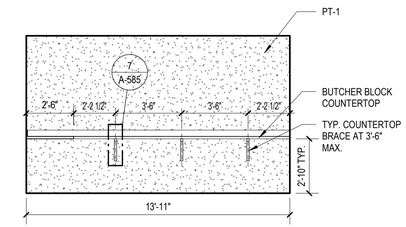

6 B101 WORKBENCH - WEST
1/4" = 1'-0"

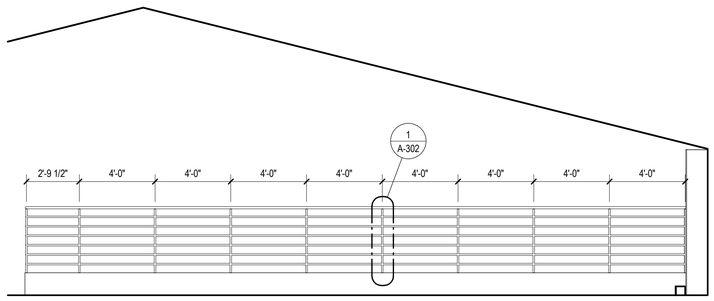

7 MEZZANINE ELEV - NORTH
1/4" = 1'-0"

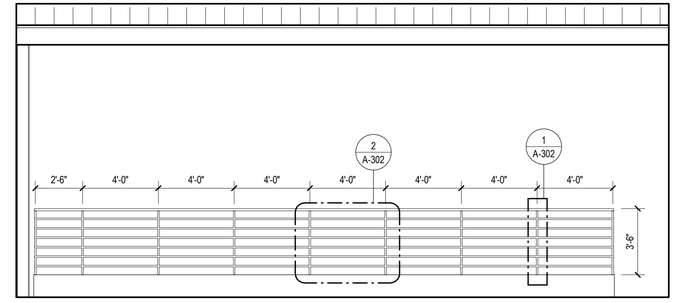

8 MEZZANINE ELEV - EAST
1/4" = 1'-0"

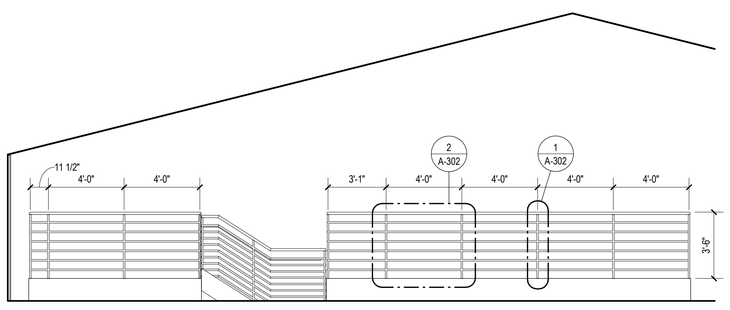

9 MEZZANINE ELEV - SOUTH
1/4" = 1'-0"

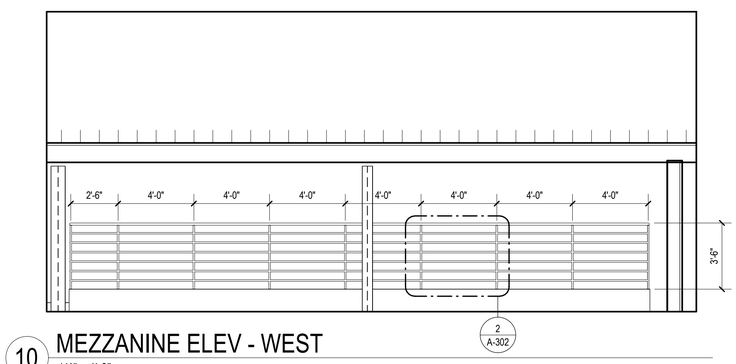

10 MEZZANINE ELEV - WEST
1/4" = 1'-0"

BID SET

Call 811 two business days before you dig

SHEET 52 OF 226

CAD NO.

NO.	REVISIONS	INT.	APP.	DATE
1	Permit Comments			01-11-2020

ACTION	BY	DATE
DESIGNED		01/03/2025
DRAWN		01/03/2025
CHECKED (FIELD)		
CHECKED (HDQTS.)		

10347 REGISTERED ARCHITECT
JAMES HILL
STATE OF WASHINGTON

REGISTERED STAMP

WASHINGTON STATE PARKS AND RECREATION COMMISSION

NISQUALLY STATE PARK

PHASE 3A MAINTENANCE BUILDING AND WWTF

INTERIOR ELEVATIONS & ENL FLOOR PLAN

A-251

SCALE
AS SHOWN

PARKS FILE#

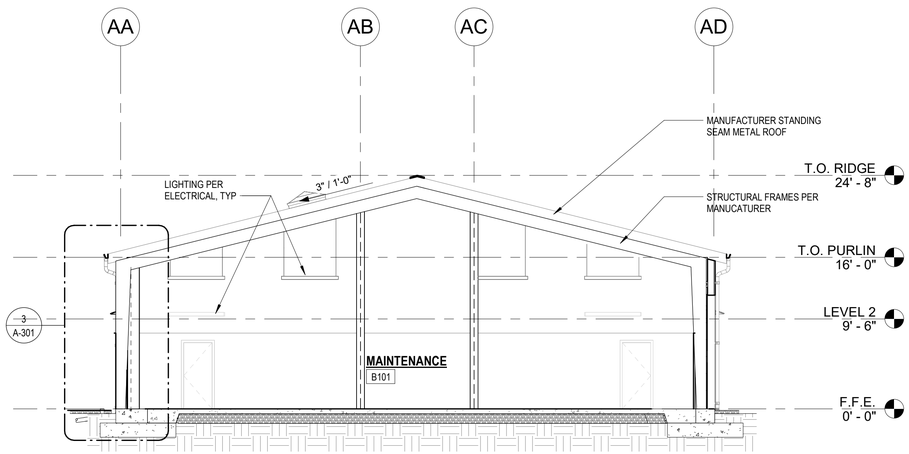

1 MAINTENANCE BUILDING - SECTION 1

1/8" = 1'-0"

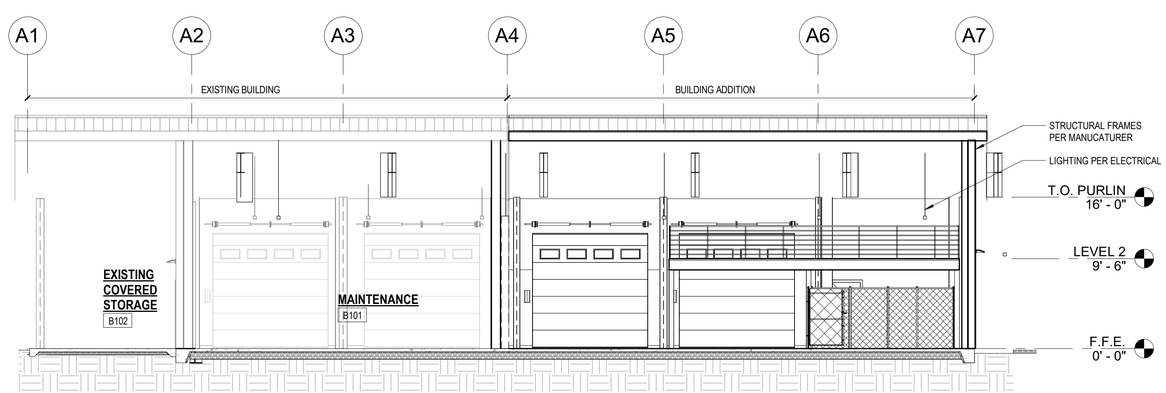

2 MAINTENANCE BUILDING - SECTION 2

1/8" = 1'-0"

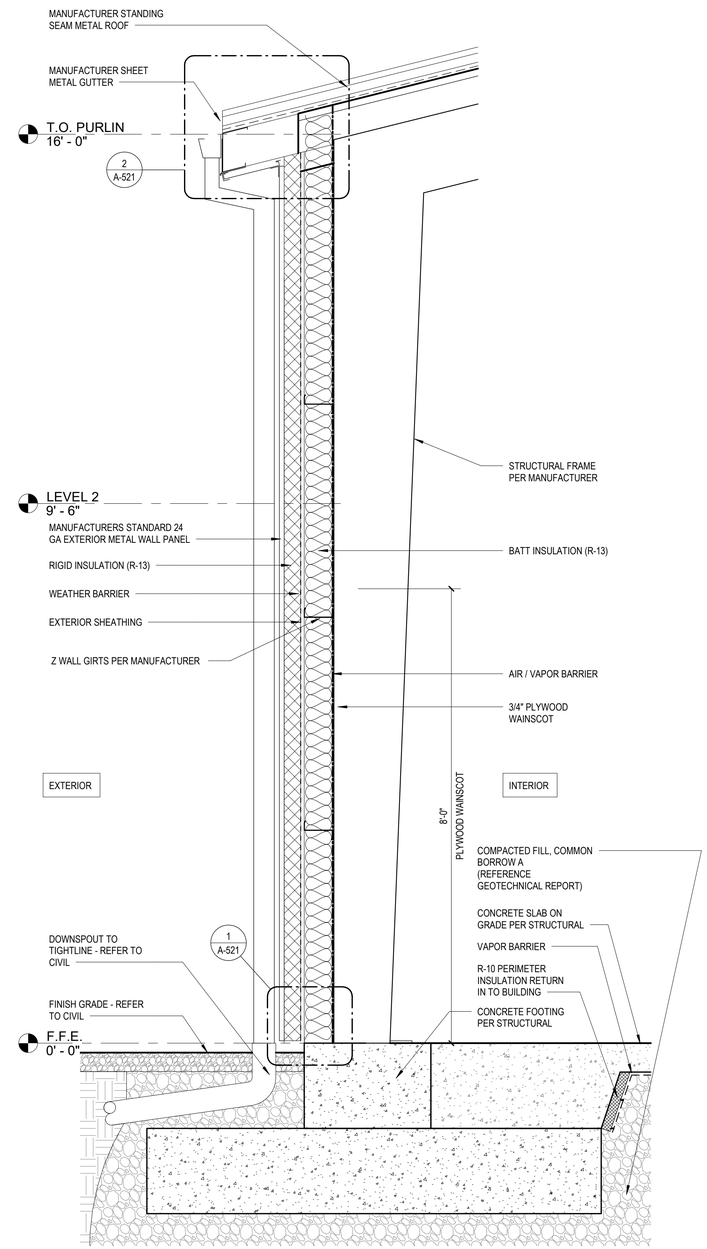

3 MAINTENANCE BUILDING - WALL SECTION

3/4" = 1'-0"

Call 811 two business days before you dig

BID SET

CAD NO.

NO.	REVISIONS	INT.	APP.	DATE
				01-11-2020

ACTION	BY	DATE
DESIGNED		01/03/2025
DRAWN		01/03/2025
CHECKED (FIELD)		
CHECKED (HDQTS.)		

10347 REGISTERED ARCHITECT JAMES HILL STATE OF WASHINGTON

REGISTERED STAMP

WASHINGTON STATE PARKS AND RECREATION COMMISSION

NISQUALLY STATE PARK

PHASE 3A MAINTENANCE BUILDING AND WWTF

BUILDING & WALL SECTIONS

A-301

SCALE

AS SHOWN

PARKS FILE#

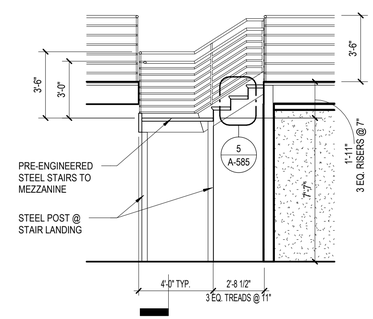

5 SECTION THRU STAIR 2
1/4" = 1'-0"

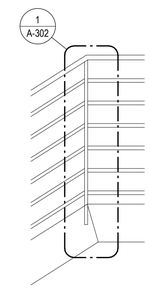

3 RAILING PATTERN STAIR
1/2" = 1'-0"

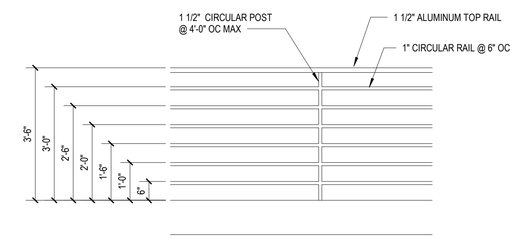

2 RAILING PATTERN
1/2" = 1'-0"

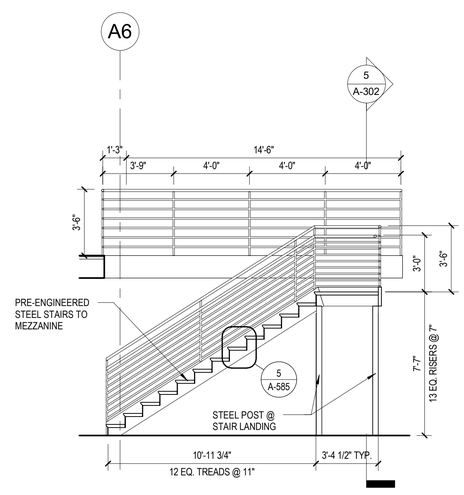

4 SECTION THRU STAIR 1
1/4" = 1'-0"

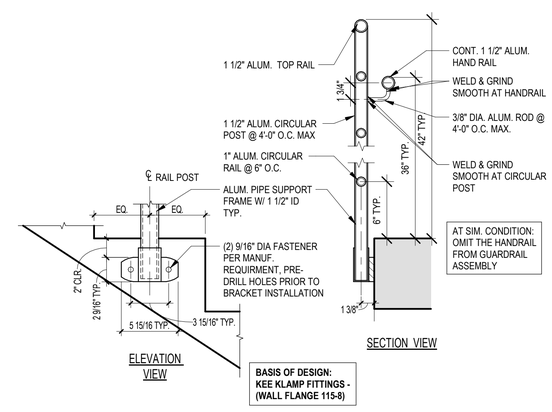

1 TYP. GUARDRAIL @ STAIR
1 1/2" = 1'-0"

Call 811
two business days
before you dig

SHEET 54 OF 226

BID SET

CAD NO.

NO.	REVISIONS	INT.	APP.	DATE
				01-11-2020

ACTION	BY	DATE
DESIGNED		01/03/2025
DRAWN		01/03/2025
CHECKED (FIELD)		
CHECKED (HDQTS.)		

10347
REGISTERED ARCHITECT
JAMES HILL
STATE OF WASHINGTON

REGISTERED STAMP

WASHINGTON STATE PARKS AND RECREATION COMMISSION

NISQUALLY STATE PARK

PHASE 3A MAINTENANCE BUILDING AND WWTF

VERTICAL CIRCULATION

A-302

SCALE
AS SHOWN

PARKS FILE#

WALL TYPE NOTES

1. REFER TO FINISH SCHEDULE FOR WALL FINISH.
2. ALL ASSEMBLY TYPES ARE DRAWN IN SECTION UNLESS A UNIQUE CONDITION REQUIRES AN ADDITIONAL PLAN VIEW OF THE ASSEMBLY.
3. IN AN ASSYMMETRICAL WALL CONDITION, THE EXTRA LAYERS WILL OCCUR ON THE SIDE OF THE WALL THE TAG IS LOCATED ON.
4. PROVIDE BACKING IN WALLS FOR CASEWORK, MESSAGE BOARDS, TOILET ACCESSORIES, OFOI FURNISHINGS AND ALL OTHER WALL SUPPORTED ITEMS. REFER TO INTERIOR ELEVATIONS AND PLANS FOR LOCATIONS.
5. PROVIDE BACKING AT ELECTRICAL AND COMMUNICATIONS ROOMS AS REQUIRED PER THE ELECTRICAL REQUIREMENTS.
6. TOP AND BOTTOM PLATES: ALIGN AND ANCHOR TO BUILDING STRUCTURAL MEMBERS AT EACH END AND AT 24" O.C.
9. AT AIR BARRIER WALLS PROVIDE:
   A. SEALANT BETWEEN PLATES AND SUBSTRATE.
   B. SEALANT BETWEEN WALL AND ADJACENT VERTICAL SURFACES.
   C. SEAL AIR BARRIER MEMBRANE TO ADJACENT SURFACE, FULL PERIMETER OF WALL.
   D. SEALANT AROUND ALL OPENINGS AT ELECTRICAL DEVICES, DUCTS AND PIPING, AND STRUCTURE PENETRATING WALL SURFACES.
10. REFER TO GENERAL SHEETS (**GI301**) FOR AIR BARRIER LOCATIONS.

PARTITION TYPE DIAGRAM

ASSEMBLY TYPE

W = INTERIOR WOOD STUD
TL1 = TILE AT BATHROOM SIDE FULL HEIGHT

TOP OF WALL CONDITION

NOTE: ALL WALLS AND GWB EXTEND TO STRUCTURE, UNLESS NOTED OTHERWISE. REFER TO PARTITION HEIGHTS BELOW FOR WALLS THAT DO NOT EXTEND TO STRUCTURE. REFER ALSO TO STRUCTURAL SHEETS FOR LOCATIONS OF SHEAR WALL AND REQUIRED SHEATHING.

a. PARTIAL HEIGHT PARTITION
b. FULL HEIGHT WALL - STUDS EXTEND TO STRUCTURE, EXTEND GWB TO 6" ABOVE UPPERMOST CEILING ON BOTH SIDES OF WALL.

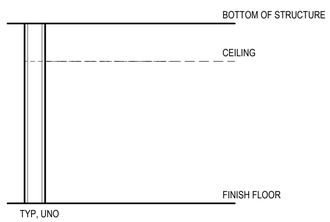

FLOOR TYPE

F1

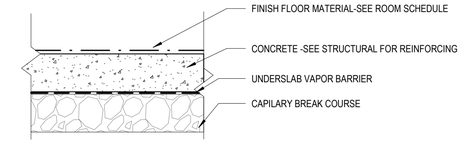

ROOF TYPE

R1

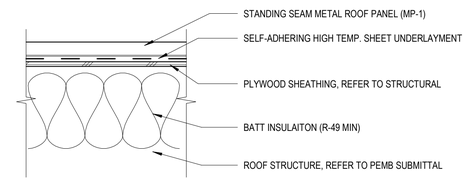

INTERIOR WALL TYPES

PER PLAN W2A

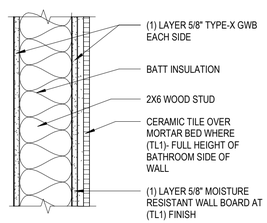

W2A AS INDICATED ABOVE
TL1

PER PLAN W2B

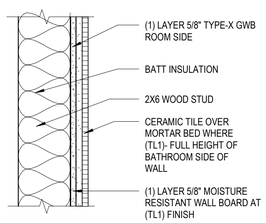

W2B AS INDICATED ABOVE
TL1

PER PLAN W2C

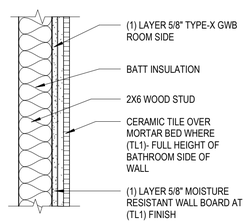

W2C AS INDICATED ABOVE
TL1

PER PLAN W3C

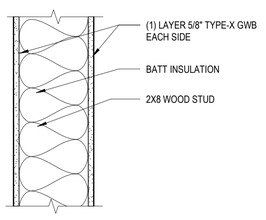

BID SET

Call 811 two business days before you dig

SHEET 55 OF 226

CAD NO.

NO.	REVISIONS	INT.	APP.	DATE
1	Permit Comments			01-11-2020

ACTION	BY	DATE
DESIGNED		01/03/2025
DRAWN		01/03/2025
CHECKED (FIELD)		
CHECKED (HDQTS.)		

10347 REGISTERED ARCHITECT
JAMES HILL
STATE OF WASHINGTON

REGISTERED STAMP

WASHINGTON STATE PARKS AND RECREATION COMMISSION

NISQUALLY STATE PARK

PHASE 3A MAINTENANCE BUILDING AND WWTF

FLOOR AND ROOF TYPES

A-502

SCALE
AS SHOWN

PARKS FILE#

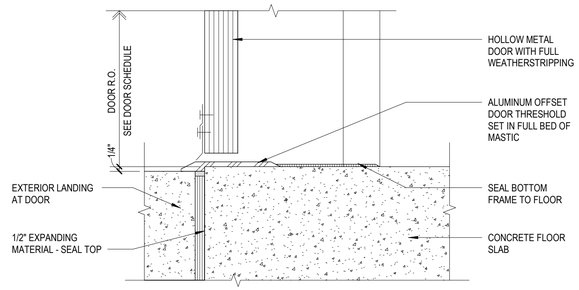

5 MAN DOOR THRESHOLD
3" = 1'-0"

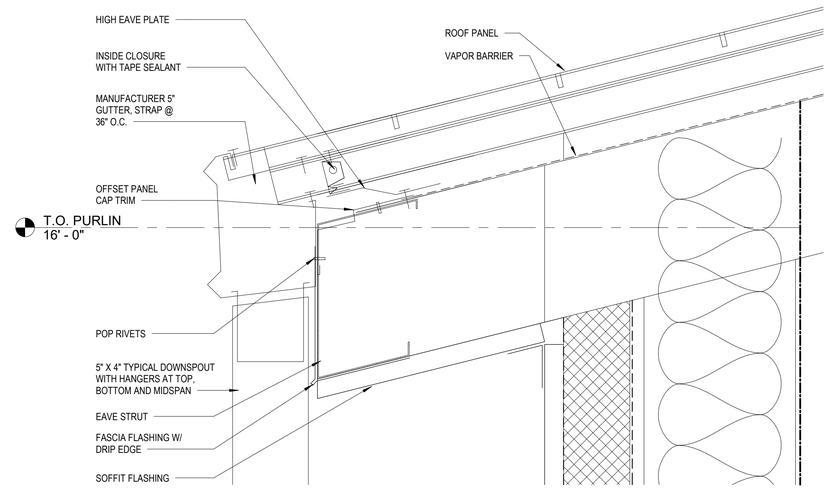

2 EAVE DETAIL
3" = 1'-0"

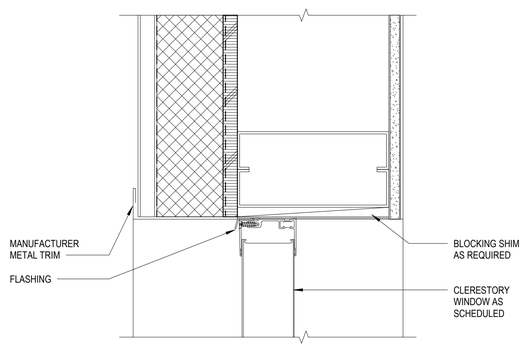

7 WINDOW HEAD, JAMB SIM.
3" = 1'-0"

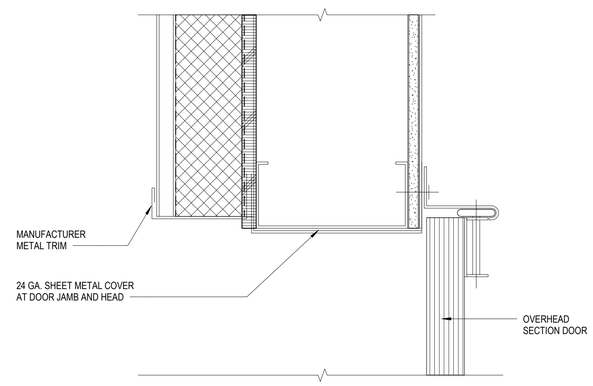

4 VEHICLE DOOR JAMB, HEAD SIM.
3" = 1'-0"

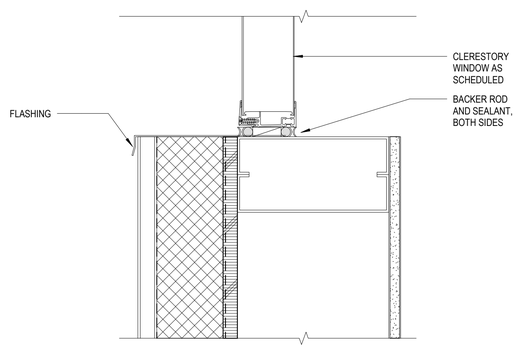

6 WINDOW SILL
3" = 1'-0"

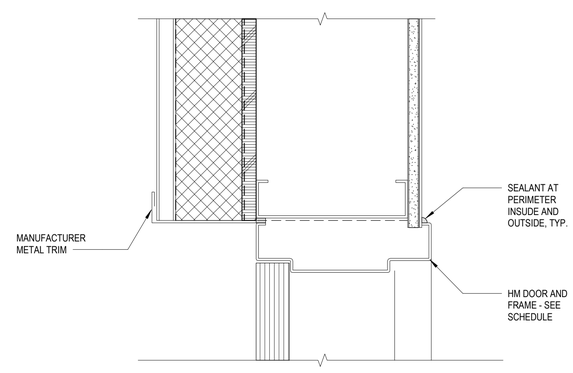

3 MAN DOOR HEAD, JAMB SIM.
3" = 1'-0"

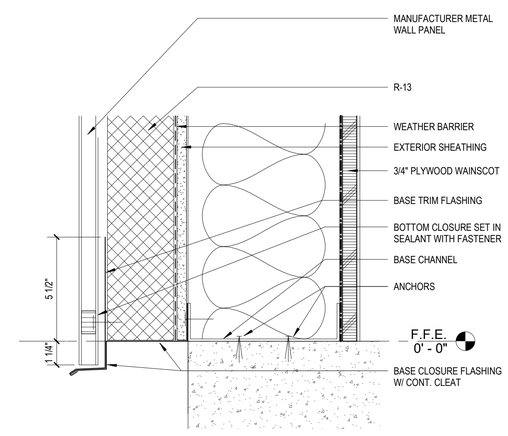

1 BASE CHANNEL DETAIL
3" = 1'-0"

Call 811 two business days before you dig

BID SET

SHEET 56 OF 226

CAD NO.

NO.	REVISIONS	INT.	APP.	DATE
				01-11-2020

ACTION	BY	DATE
DESIGNED		01/03/2025
DRAWN		01/03/2025
CHECKED (FIELD)		
CHECKED (HDQTS.)		

10347 REGISTERED ARCHITECT
JAMES HILL
STATE OF WASHINGTON

REGISTERED STAMP

WASHINGTON STATE PARKS AND RECREATION COMMISSION

NISQUALLY STATE PARK

PHASE 3A MAINTENANCE BUILDING AND WWTF

EXTERIOR DETAILS

A-521

SCALE
AS SHOWN

PARKS FILE#

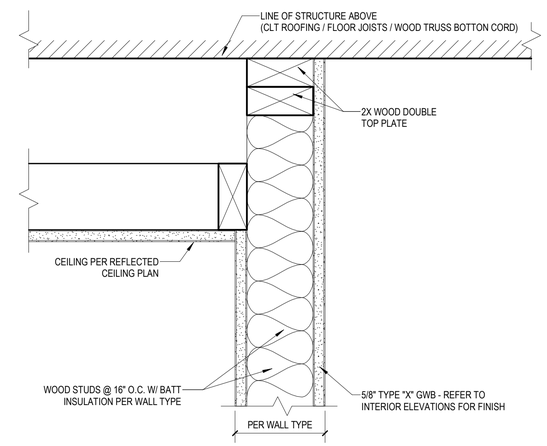

2 WALL TYPE DETAIL @ BRACED WALL @ GWB/ ACT CEILING

3" = 1'-0"

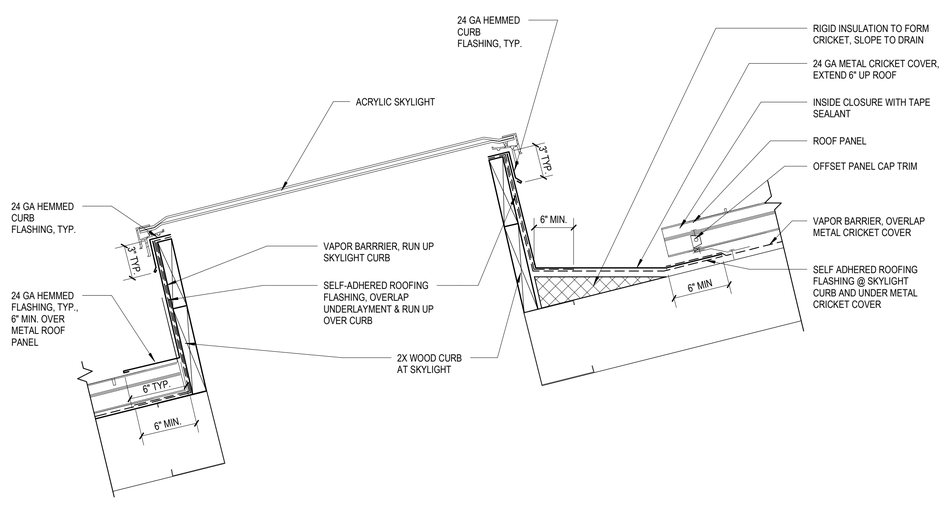

3 TYP. SKYLIGHT CURB

1 1/2" = 1'-0"

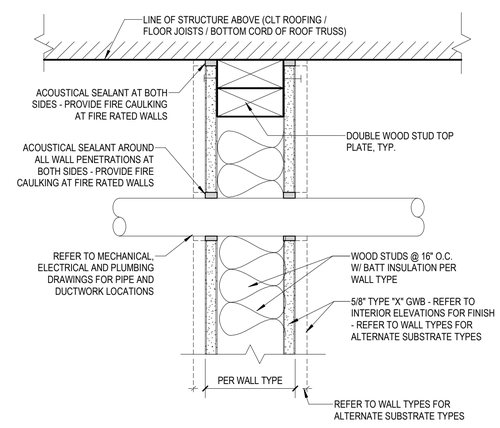

1 WALL TYPE DETAIL @ FULL HEIGHT TO STRUCTURE

3" = 1'-0"

Call 811 two business days before you dig

SHEET 57 OF 226

BID SET

CAD NO.

01-11-2020	DATE
	APP.
	INT.
	REVISIONS
	NO.

ACTION	BY	DATE
DESIGNED		01/03/2025
DRAWN		01/03/2025
CHECKED (FIELD)		
CHECKED (HDQTS.)		

10347 REGISTERED ARCHITECT
JAMES HILL
STATE OF WASHINGTON

REGISTERED STAMP

WASHINGTON STATE PARKS AND RECREATION COMMISSION

NISQUALLY STATE PARK

PHASE 3A MAINTENANCE BUILDING AND WWTF

CEILING DETAILS

A-561

SCALE

AS SHOWN

PARKS FILE#

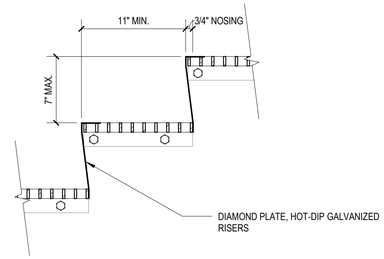

5 STAIR TREAD DETAIL
1 1/2" = 1'-0"

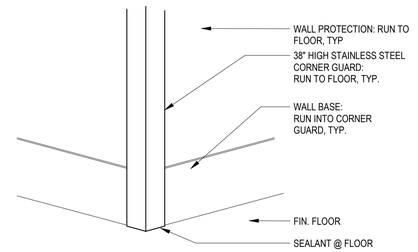

CORNER GUARD DETAIL

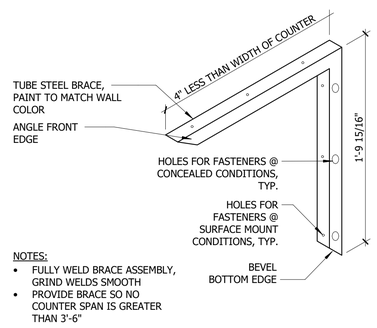

7 TYP. COUNTERTOP BRACE
1 1/2" = 1'-0"

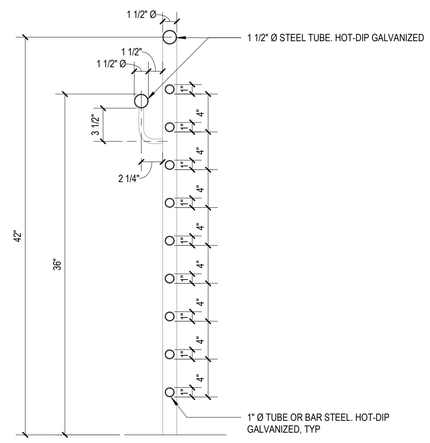

4 GUARDRAIL / HANDRAIL DETAIL
1 1/2" = 1'-0"

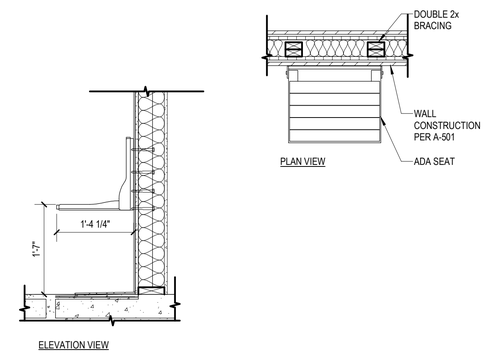

2 ADA FOLD DOWN BENCH IN SHOWER
3/4" = 1'-0"

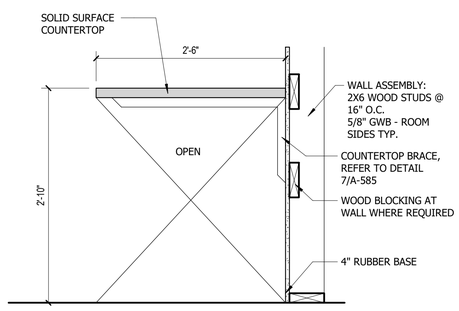

6 TYP. COUNTERTOP @ WORKSTATION
1" = 1'-0"

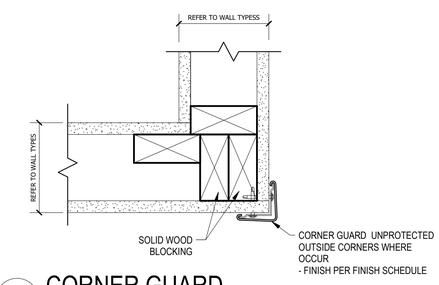

3 CORNER GUARD
3" = 1'-0"

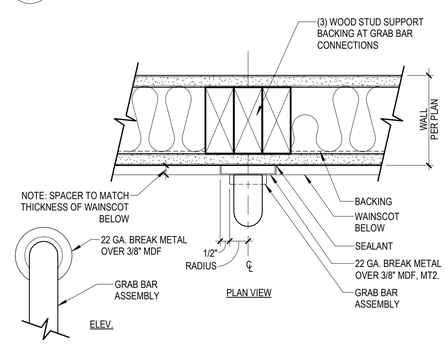

1 GRAB BAR DETAIL
3" = 1'-0"

Call 811 two business days before you dig

SHEET 58 OF 226

BID SET

CAD NO.		
01-11-2020	DATE	
	APP.	
	INT.	
REVISIONS		
NO.		

ACTION	BY	DATE
DESIGNED		01/03/2025
DRAWN		01/03/2025
CHECKED (FIELD)		
CHECKED (HDQTS.)		

10347 REGISTERED ARCHITECT
JAMES HILL
STATE OF WASHINGTON

REGISTERED STAMP

WASHINGTON STATE PARKS AND RECREATION COMMISSION

NISQUALLY STATE PARK

PHASE 3A MAINTENANCE BUILDING AND WWTF

MISCELLANEOUS DETAILS

A-585

SCALE
AS SHOWN

PARKS FILE#

DOOR SCHEDULE

NO.	W	H	THCK	DOOR TYPE	DOOR MAT'L	DOOR FINISH	DOOR GLASS	FRAME TYPE	FRAME MAT'L	FRAME FINISH	HARDWARE GROUP	REMARKS
B101G	12' - 0"	12' - 0"	1 5/8"	B	STL	PT-1	PER MANUF	F2	STL	PT-1	#17	
B101H	12' - 0"	12' - 0"	1 5/8"	B	STL	PT-1	PER MANUF	F2	STL	PT-1	#17	
B101J	3' - 0"	7' - 0"	2"	A	HM	PT-1	-	F1	STL	PT-1	#11	
B101K	3' - 0"	7' - 0"	2"	A	HM	PT-1	-	F1	HM	PT-1	#11	
B103	3' - 0"	7' - 0"	2"	A	HM	PT-1	-	F1	HM	PT-1	#10B	
B104	3' - 0"	7' - 0"	2"	A	HM	PT-1	-	F1	HM	PT-1	#13A	

DOOR TYPE

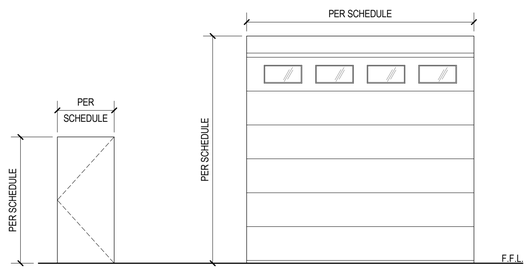

FRAME TYPE

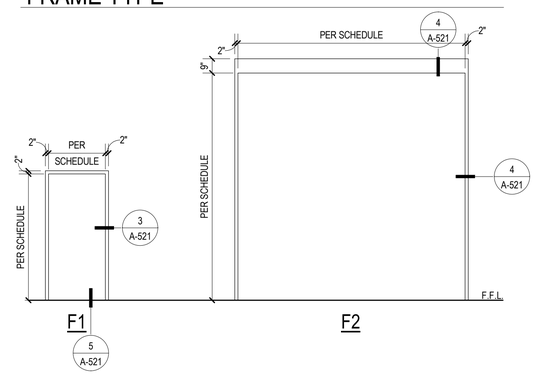

WINDOW TYPE

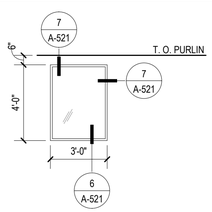

W1

DOOR NOTES

1. ALL DOOR HARDWARE TO CONFORM WITH A.D.A. STANDARDS.
2. ALL DOOR HARDWARE HEIGHTS TO CONFORM WITH A.D.A. STANDARDS.
3. PRIOR TO CONSTRUCTION, SUBMIT DOOR HARDWARE TO ARCHITECT FOR APPROVAL.
4. CONFIRM DOOR FRAME DIMENSIONS AND COMPATIBILITY WITH DOOR HARDWARE PRIOR TO IMPLEMENTATION.
5. REFER TO FINISH LEGEND FOR DOOR AND FRAME FINISH REFERENCES.
6. PROVIDE ACOUSTICAL INSULATION AND SEALANTS AT DOOR AND FRAMES INSTALLED.
7. EXITING DOORS SHALL HAVE APPROVED PANIC HARDWARE PER CURRENT IBC
8. TACTILE SIGNS SHALL BE INSTALLED AS PER CURRENT IBC AND ANSI 117

GENERAL FRAME & DOOR NOTES

1. DOOR & FRAME SCHEDULE NOTES APPLY TO ALL DOOR & FRAME.
2. DIMENSIONS OF ALL OPENINGS TO BE FIELD VERIFIED PRIOR TO FABRICATION.
3. PROVIDE 1/2" MAX SHIM SPACE AT HEAD, JAMB AND SILL AT OPENINGS.
4. FRAME MANUFACTURER SHALL COORDINATE LOCATIONS OF CONCEALED CONDUIT & J-BOXES FOR SYSTEM HARDWARE
5. PRIOR TO MANUFACTURING OF FRAMES & COORDINATE WITH ASSOCIATED HARDWARE & DEVICES.
6. SEE SPECIFICATIONS SECTION 08 71 00 DOOR HARDWARE FOR DOOR HARWARE SET NOTED IN DOOR SPECIFICATIONS OPENING SCHEDULE.
7. ALL HOLLOW METAL DOORS AND FRAMES ARE TO BE PAINTED

ABBREVIATIONS:

ALUM	ALUMINUM
E	EXTERIOR
F	FLUSH- INSULATED HOLLOW METAL DOOR
FF	FACTORY FINISH
GD	GARAGE DOOR
HM	HOLLOW METAL
P	PAINT
POLY	HONEYCOMB POLYMER CORE
SL	STAINED AND LAQUERED
TEMP	TEMPERED GLAZING
WD	WOOD

GLAZING TYPES

GL1 - HIGH PERFORMANCE LOW-E INSULATED CLEAR GLASS
U-VALUE: 0.38 MIN.
VISIBLE TRANSMISSION: 70% MIN.
SHGC: 0.39 MAXIMUM

WINDOW TYPE NOTES

1. ALL WINDOWS SHOULD BE RATED WITH U-FACTOR, SHGC, VT AND LEAKAGE RATING
2. U-FACTOR AND SHGC RATING TO COMPLY WITH TABLE C402.2 OF WASHINGTON STATE ENERGY CODE

BID SET

Call 811 two business days before you dig

CAD NO.

NO.	REVISIONS	INT.	APP.	DATE
1	Permit Comments			01-11-2020

ACTION	BY	DATE
DESIGNED		01/03/2025
DRAWN		01/03/2025
CHECKED (FIELD)		
CHECKED (HDQTS.)		

10347 REGISTERED ARCHITECT JAMES HILL STATE OF WASHINGTON

REGISTERED STAMP

WASHINGTON STATE PARKS AND RECREATION COMMISSION

NISQUALLY STATE PARK

PHASE 3A MAINTENANCE BUILDING AND WWTF

DOOR & FRAME SCHEDULE

A-601

SCALE

AS SHOWN

PARKS FILE#

FINISH SCHEDULE

ROOM NO.	ROOM NAME	FLOOR MATL	FLOOR FIN	BASE MATL	BASE FIN	NORTH (NW) WALL MATL	NORTH (NW) WALL FIN	EAST (NE) WALL MATL	EAST (NE) WALL FIN	SOUTH (SE) WALL MATL	SOUTH (SE) WALL FIN	WEST (SW) WALL MATL	WEST (SW) WALL FIN	CEILING FIN	CEILING MATL	NOTES
200	MEZZANINE/ STORAGE	PLYWD	SEALED	RB						PT-1		PT-1		OTS		
B101	MAINTENANCE	CONC	SEALED	RB		PT-1		PT-1		PT-1		PT-1		OTS		
B102	EXISTING COVERED STORAGE	-		-	-			-		-		-		-		
B103	RESTROOM	CT-1		CT-3	-	CT-2		CT-2		CT-2		CT-2		GWB-1		

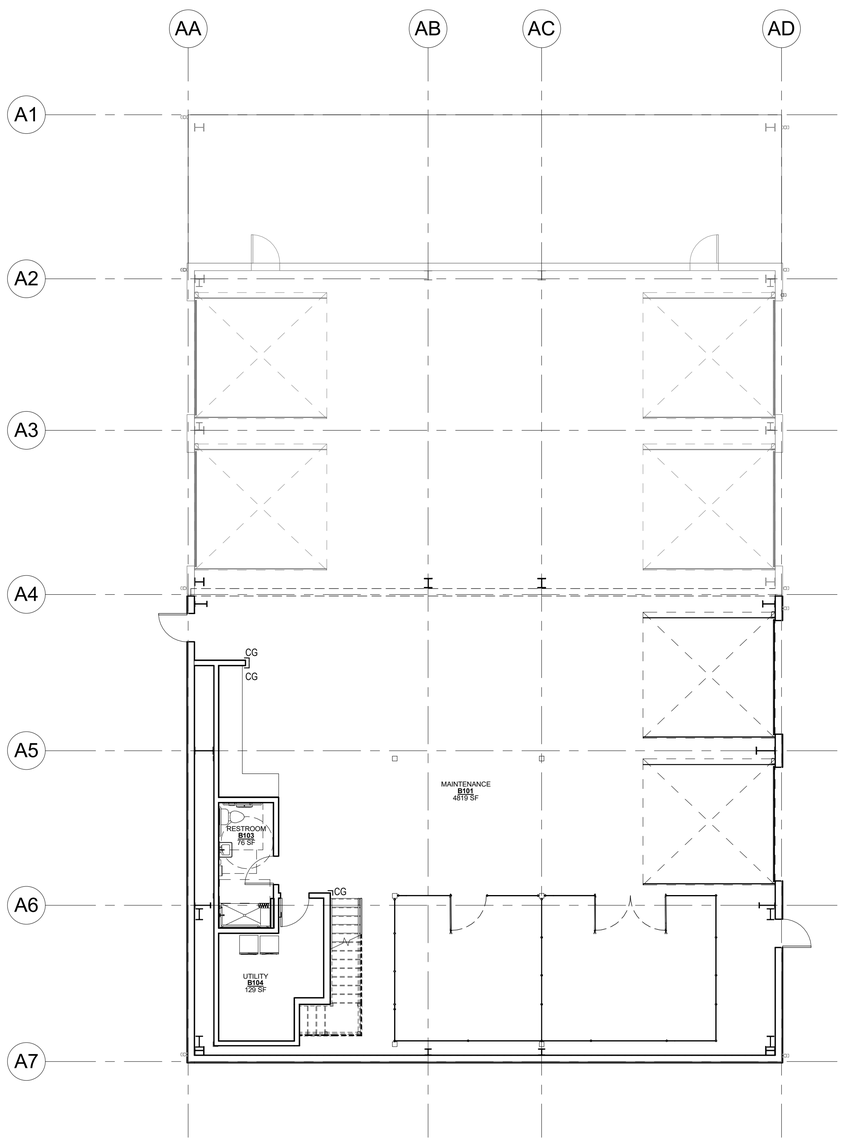

1 FINISH FLOOR PLAN
1/8" = 1'-0"

INTERIOR FINISH FLOOR PLAN LEGEND

FINISHED CONCRETE

CG CORNER GUARD

FINISH PLAN NOTES

1. ALL INTERIOR SHALL MEET THE CURRENT IBC FOR FLAME SPREAD AND SMOKE DEVELOPMENT MINIMUM STANDARDS.
2. REFER TO 'FINISH LEGEND' AND PROJECT SPECIFICATION MANUAL FOR INTERIOR FINISH CALL-OUTS AND MANUFACTURES.
3. REFER TO 'DOOR SCHEDULE' FOR DOOR AND FRAME FINISH.
4. REFER TO 'REFLECTED CEILING PLAN' FOR CEILING FINISHES.
5. REFER TO 'INTERIOR ELEVATIONS', AND 'MOUNTING HEIGHT SHEET' FOR DIMENSIONS AND PATTERNS.
6. SV1 "GRAIN" SHALL BE PERPENDICULAR TO DOOR/ ENTRY OPENING UON
7. ALL INTERIOR WALL OR CEILING FINISHES SHALL BE CLASS A OR B TO COMPLY WITH NFPA101 TABLE 10.2.2.

INTERIOR FINISH LEGEND

*BASIS OF DESIGN - ARCHITECT HAS FULL SELECTION OF COLOR

	Tag	Material	Manufacturer	Product	Notes
FLOOR	C-1	CONCRETE - SEALED	-	PER ARCHITECTURAL SPECIFICATIONS	(REFER TO SPECIFICATIONS)
	CT-1	PORCELAIN TILE (FIELD)	DALTILE	DAPPLE GRAY, DK-326, 2"X2" CERAMIC MOSAIC TILE	2" x 2" (REFER TO DRAWINGS)
WALLS	PT-1	PAINT (FIELD)	PARKER PAINT	ULTRATECHL C122; EGGSHELL ENAMEL; COLOR: CL 2851 W FILTERED	
	CT-2	PORCELAIN TILE (FIELD)	DALTILE	PEPPER WHITE, D-147, 4 1/4"X4 1/4" SEMI-GLOSS GLAZED CERAMIC TILE	(REFER TO DRAWINGS)
BASE	RB-1	RUBBER BASE	ARMSTRONG	STYLE; COVED WALL BASE / COLOR: GREY MIST, 4" BASE	(REFER TO DRAWINGS)
	CT-3	PORCELAIN TILE (COVED TRIM)	DALTILE	DESERT GRAY, D-X114, 4 1/4"X4 1/4" SEMI-GLOSS GLAZED CERAMIC TILE	(REFER TO DRAWINGS)
CASEWORK	PL-1	PLASTIC LAMINATE (VERTICAL)	NEVAMAR	TEXTURED: RECON OAK WZ005N (REFER TO DRAWINGS)	
	PL-2	PLASTIC LAMINATE (HORIZ.)	NEVAMAR	TEXTURED: BRONZE MATRIX II MR2008T (REFER TO DRAWINGS)	
	EB-1	DRAWER & DOOR EDGE BANDING	CANPLAST	PVC EDGE BANDING: MATCH PL-1/ GROSS TL-3MM	
	EB-2	COUNTER EDGE BANDING	CANPLAST	PVC EDGE BANDING: MATCH PL-2/ GROSS TL-3MM 'T' MOLDING	
CEILING	GWB-1	PAINTED GYPSUM DRYWALL	PARKER PAINT	ULTRA TECH C122 EGGSHELL ENAMEL	MATCH ADJACENT WALL
DOORS	DF-1	DOOR FRAME (HM - PAINT)	PARKER PAINT	ULTRATECH C144 SEMI-GLOSS ENAMEL, CLW1043W "FOSSIL DUST"	(REFER TO DRAWINGS)
	DF-2	SOLID CORE DOOR- PLAM & PAINT	PARKER PAINT	ULTRATECH C144 SEMI-GLOSS ENAMEL, C2851W "FILTERED"	(REFER TO DRAWINGS)
MISC.	BB-1	BUTCHER BLOCK (PARTIAL HEIGHT WALL TOP CAP / EQUIPP. MOUNTING BOARD)	-	HOMOGENEOUS COUNTERTOP, 1 1/2" THICK	(REFER TO DRAWINGS)

BID SET

Call 811 two business days before you dig

SHEET 60 OF 226

CAD NO.

NO.	REVISIONS	INT.	APP.	DATE
				01-11-2020

ACTION	BY	DATE
DESIGNED		01/03/2025
DRAWN		01/03/2025
CHECKED (FIELD)		
CHECKED (HDQTS.)		

10347 REGISTERED ARCHITECT
JAMES HILL
STATE OF WASHINGTON

REGISTERED STAMP

WASHINGTON STATE PARKS AND RECREATION COMMISSION

NISQUALLY STATE PARK

PHASE 3A MAINTENANCE BUILDING AND WWTF

FINISH SCHEDULE

A-621

SCALE
AS SHOWN

PARKS FILE#

GENERAL CODE INFORMATION

Project Name: **Nisqually State Park Pump House Building**

Address: 43, Ea371 Mashel Prairie Rd, Eatonville, WA 98328

Jurisdiction: Pierce County
Department of Planning and Land Services

RESTROOM/SHOWER – BUILDING CODE ANALYSIS
2018 IBC & WAC 51-50 4TH PRINTING

PROJECT DESCRIPTION:
THE SCOPE OF WORK IS TO PROVIDE A 362 GSF AQUA STORAGE PUMP HOUSE. THE BUILDING WILL HAVE NON-SEPARATED OCCUPANCIES.

CODES REFERENCED:

INTERNATIONAL BUILDING CODE (IBC)	2021 EDITION
INTERNATIONAL MECHANICAL CODE (IMC)	2021 EDITION
INTERNATIONAL FIRE CODE (IFC)	2021 EDITION
UNIFORM PLUMBING CODE (UPC)	2021 EDITION
NATIONAL ELECTRICAL CODE (NFPA 70)	2020 EDITION
WASHINGTON STATE BUILDING CODE (IBC):	WAC 51-50
WASHINGTON STATE MECHANICAL CODE (IMC):	WAC 51-52
WASHINGTON STATE FIRE CODE (IFC):	WAC 51-54A
ACCESSIBILE & USABLE BUILDINGS & FACILITIES (ICC/ANSIA117.1)	2017

INTERNATIONAL BUILDING CODE:

CHAPTER 3 OCCUPANCY CLASSIFICATION AND USE
USE AND OCCUPANCY CLASSFICIATION
S-1 STORAGE
U UTILITY

SECTION 311 STORAGE GROUP S
311.2 MODERATE-HAZARD STORAGE, GROUP S-1. STORAGE GROUP S-1 OCCUPANCIES ARE BUILDINGS OCCUPIED FOR STORAGE USES THAT ARE NOT CLASSIFIED AS GROUP S-2, INCLUDING, BUT NOT LIMITED TO, STORAGE OF THE FOLLOWING:
DRY BOAT STORAGE (INDOOR)
SECTION 312 UTILITY AND MISCELLANEOUS GROUP U
312.1 GENERAL. BUILDINGS AND STRUCTURES OF AN ACCESSORY CHARACTER AND MISCELLANEOUS STRUCTURES NOT CLASSIFIED IN ANY SPECIFIC OCCUPANCY SHALL BE CONSTRUCTED, EQUIPPED AND MAINTAINED TO CONFORM TO THE REQUIREMENTS OF THIS CODE COMMENSURATE WITH THE FIRE AND LIFE HAZARD INCIDENTAL TO THEIR OCCUPANCY.

CHAPTER 5 GENERAL BUILDING HEIGHTS AND AREAS
(WAC) TABLE 504.3 ALLOWABLE BUILDING HEIGHT IN FEET ABOVE GRADE PLANE
OCCUPANCY CLASSIFICATION 'S' AND 'U' = NON-SPRINKLERED, TYPE V-B = 40 FT ABOVE GRADE PLANE
PROVIDED: 13'-0"

(WAC) TABLE 504.4 ALLOWABLE NUMBER OF STORIES ABOVE GRADE PLANE
OCCUPANCY CLASSIFICATION 'S' AND 'U' = NON-SPRINKLERED, TYPE V-B = 1 STORY ABOVE GRADE PLANE
PROVIDED: 1 STORY
(WAC) TABLE 506.2 ALLOWABLE AREA FACTOR (AT = NS, S1, S13R, S13D OR SM, AS APPLICABLE) IN SQUARE FEET
OCCUPANCY CLASSIFICATION 'U' = NON-SPRINKLERED, SINGLE-STORY, TYPE V-B = 5,500 SF *(MOST RESTRICTIVE)*
PROVIDED: 620 GSF

SECTION 508 MIXED USE AND OCCUPANCY
508.3 NONSEPARATED OCCUPANCIES. BUILDINGS OR PORTIONS OF BUILDINGS THAT COMPLY WITH THE PROVISIONS OF THIS SECTION SHALL BE CONSIDERED AS NONSEPARATED OCCUPANCIES.
508.3.1 OCCUPANCY CLASSIFICATION. NONSEPARATED OCCUPANCIES SHALL BE INDIVIDUALLY CLASSIFIED IN ACCORDANCE WITH SECTION 302.1. THE REQUIREMENTS OF THIS CODE SHALL APPLY TO EACH PORTION OF THE BUILDING BASED ON THE OCCUPANCY CLASSIFICATION OF THAT SPACE. IN ADDITION, THE MOST RESTRICTIVE PROVISIONS OF CHAPTER 9 THAT APPLY TO THE NONSEPARATED OCCUPANCIES SHALL APPLY TO THE TOTAL NONSEPARATED OCCUPANCY AREA.

CHAPTER 6 TYPES OF CONSTRUCTION
(WAC) TABLE 601 FIRE-RESISTANCE RATING REQUIREMENTS FOR BUILDING ELEMENTS: *TYPE V-B*

STRUCTURAL FRAME	0 HOURS
BEARING WALL (INTERIOR & EXTERIOR)	0 HOURS
NON BEARING WALLS (EXTERIOR)	TABLE 602
1 HOUR: X>5FT, 5 FT ≤ 10 FT	
0 HOUR: 10 FT ≤ X < 30, X ≥ 30 FT	
NON-BEARING WALLS (INTERIOR)	0 HOURS
FLOOR CONSTRUCTION	0 HOURS
ROOF CONSTRUCTION	0 HOURS

CHAPTER 08 INTERIOR FINISHES
TABLE 803.13 INTERIOR WALL AND CEILING FINISH REQUIREMENTS BY OCCUPANCY

GROUP	EXIT PASSAGEWAYS	ROOMS AND ENCLOSED SPACES
S	B	C
U	NO RESTRICTIONS	NO RESTRICTIONS

CHAPTER 10 MEANS OF EGRESS
SECTION 1005 MEANS OF EGRESS SIZING
0.2 INCH PER OCCUPANT AT OTHER EGRESS COMPONENTS
TABLE 1017.2 EXIT ACCESS TRAVEL DISTANCE

OCCUPANCY	WITHOUT SPRINKLER SYSTEM
S-1	200 FEET
U	300 FEET

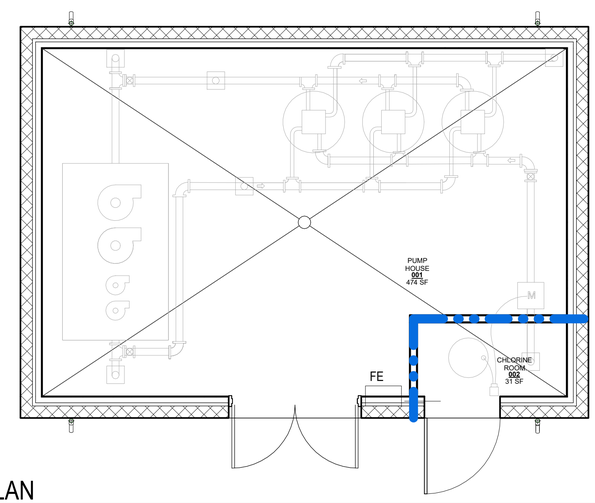

1 CODE FLOOR PLAN
1/4" = 1'-0"

CODE FLOOR PLAN LEGEND

FE — FE: WALL MOUNTED FIRE EXTINGUISHER CLASS A TYPE FE UNLESS NOTED OTHERWISE

XXX — ROOM NUMBER
XXX — OCCUPANT AREA
XXX — OCCUPANT LOAD

CODE REQUIRED SIGNAGE, AS NOTED ON PLAN

1- HOUR RATED WALL

BID SET

Call 811 two business days before you dig

SHEET 61 OF 226

CAD NO.

NO.	REVISIONS	INT.	APP.	DATE
				07/20/21

ACTION	BY	DATE
DESIGNED		01/03/2025
DRAWN		01/03/2025
CHECKED (FIELD)		
CHECKED (HDQTS.)		

10347 REGISTERED ARCHITECT
JAMES HILL
STATE OF WASHINGTON

REGISTERED STAMP

WASHINGTON STATE PARKS AND RECREATION COMMISSION

NISQUALLY STATE PARK

PHASE 3A MAINTENANCE BUILDING AND WWTF

PUMP HOUSE - GENERAL CODE INFORMATION

GI-201

SCALE
AS SHOWN

PARKS FILE#

AIR BARRIER FLOOR PLAN NOTES

1. SEAL ALL HOLES AND GAPS IN AIR BARRIER SYSTEM TO PROVIDE AN AIRTIGHT INSTALLATION.
2. THE CONCRETE SLAB, SLAB ON GRADE IS ASSUMED TO PROVIDE ADEQUATE AIR BARRIER PERFORMANCE. (SEAL ALL PENETRATIONS)
3. REFER TO DOOR, WINDOW AND LOUVER DETAILS FOR ADDITIONAL AIR BARRIER SYSTEM AND WEATHER RESISTANT BARRIER DETAILS.
4. ENSURE THAT ALL AIR BARRIER SYSTEMS ARE SEALED TIGHT TO EACH OTHER AT ALL TRANSITIONS, FENESTRATION OPENINGS AND JOINTS.

INSULATION VALUES:
THE FOLLOWING MINIMUM INSULATION VALUES SHALL BE:

1. EXTERIOR WALLS: R-21 @ CMU WALL
2. NEW ROOF: R-49 @ CONT. RIGID INSULATION ABOVE DECK
3. SLAB PERIMETER: R-10 @ HEATED SLABS & FOR 24 INCHES BEYOND

AIR BARRIER FLOOR PLAN LEGEND

EXTENTS OF CONTINUOUS AIR BARRIER SYSTEM

WSEC- AIR BARRIER CODE

C402.5.1.1 AIR BARRIER CONSTRUCTION. THE CONTINUOUS AIR BARRIER SHALL BE CONSTRUCTED TO COMPLY WITH THE FOLLOWING:

1. THE AIR BARRIER SHALL BE CONTINUOUS FOR ALL ASSEMBLIES THAT ARE THE THERMAL ENVELOPE OF THE BUILDING AND ACROSS THE JOINTS AND ASSEMBLIES.
2. AIR BARRIER JOINTS AND SEAMS SHALL BE SEALED, INCLUDING SEALING TRANSITIONS IN PLACES AND CHANGES IN MATERIALS. THE JOINTS AND SEALS SHALL BE SECURELY INSTALLED IN OR ON THE JOINT FOR ITS ENTIRE LENGTH SO AS NOT TO DISLODGE, LOOSEN OR OTHERWISE IMPAIR ITS ABILITY TO RESIST POSITIVE AND NEGATIVE PRESSURE FROM WIND, STACK EFFECT AND MECHANICAL VENTILATION.
3. PENETRATIONS OF THE AIR BARRIER SHALL BE CAULKED, GASKETED OR OTHERWISE SEALED IN A MANNER COMPATIBLE WITH THE CONSTRUCTION MATERIALS AND LOCATION. JOINTS AND SEALS ASSOCIATED WITH PENETRATIONS SHALL BE SEALED IN THE SAME MANNER OR TAPED OR COVERED WITH MOISTURE VAPOR-PERMEABLE WRAPPING MATERIAL. SEALING MATERIALS SHALL BE APPROPRIATE TO THE CONSTRUCTION MATERIALS BEING SEALED AND SHALL BE SECURELY INSTALLED AROUND THE PENETRATIONS SO AS NOT TO DISLODGE, LOOSEN OR OTHERWISE IMPAIR THE PENETRATIONS' ABILITY TO RESIST POSITIVE AND NEGATIVE PRESSURE FROM WIND, STACK EFFECT, AND MECHANICAL VENTILATION. SEALING OF CONCEALED FIRE SPRINKLERS, WHERE REQUIRED, SHALL BE IN A MANNER THAT IS RECOMMENDED BY THE MANUFACTURER. CAULKING OR OTHER ADHESIVE SEALANTS SHALL NOT BE USED TO FILL VOIDS BETWEEN FIRE SPRINKLER COVER PLATES AND WALLS OR CEILINGS.
4. RECESSED LIGHTING FIXTURES SHALL COMPLY WITH SECTION C402.5.8. WHERE SIMILAR OBJECTS ARE INSTALLED WHICH PENETRATE THE AIR BARRIER, PROVISIONS SHALL BE MADE TO MAINTAIN THE INTEGRITY OF THE AIR BARRIER.
5. CONSTRUCTION DOCUMENTS SHALL CONTAIN A DIAGRAM SHOWING THE BUILDING'S PRESSURE BOUNDARY IN PLAN(S) AND SECTION(S) AND A CALCULATION OF THE AREA OF THE PRESSURE BOUNDARY TO BE CONSIDERED IN THE TEST.

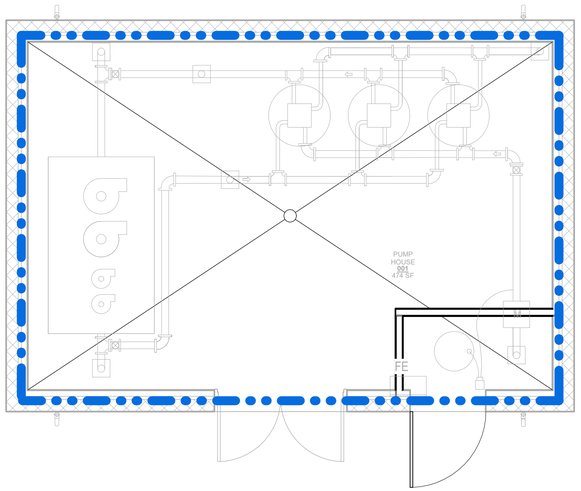

1 AIR BARRIER FLOOR PLAN
1/4" = 1'-0"

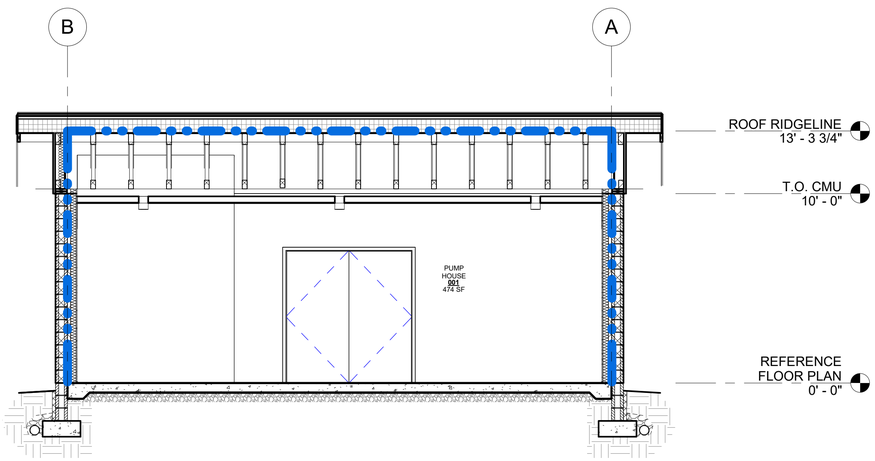

2 LONGITUDINAL AIR BARRIER BUILDING SECTION
1/4" = 1'-0"

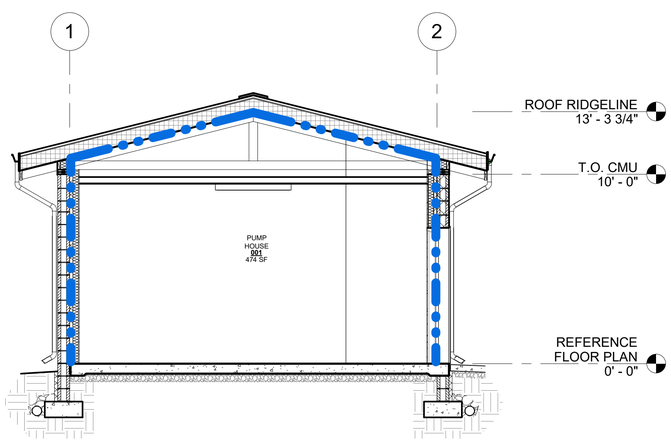

3 TRANSVERSE AIR BARRIER BUILDING SECTION
1/4" = 1'-0"

BID SET

Call 811 two business days before you dig

SHEET 62 OF 226

CAD NO.

NO.	REVISIONS	INT.	APP.	DATE
				07/20/21

ACTION	BY	DATE
DESIGNED		01/03/2025
DRAWN		01/03/2025
CHECKED (FIELD)		
CHECKED (HDQTS.)		

10347 REGISTERED ARCHITECT JAMES HILL STATE OF WASHINGTON

REGISTERED STAMP

WASHINGTON STATE PARKS AND RECREATION COMMISSION

NISQUALLY STATE PARK

PHASE 3A MAINTENANCE BUILDING AND WWTF

PUMP HOUSE - AIR BARRIER

GI-301

SCALE
AS SHOWN

PARKS FILE#

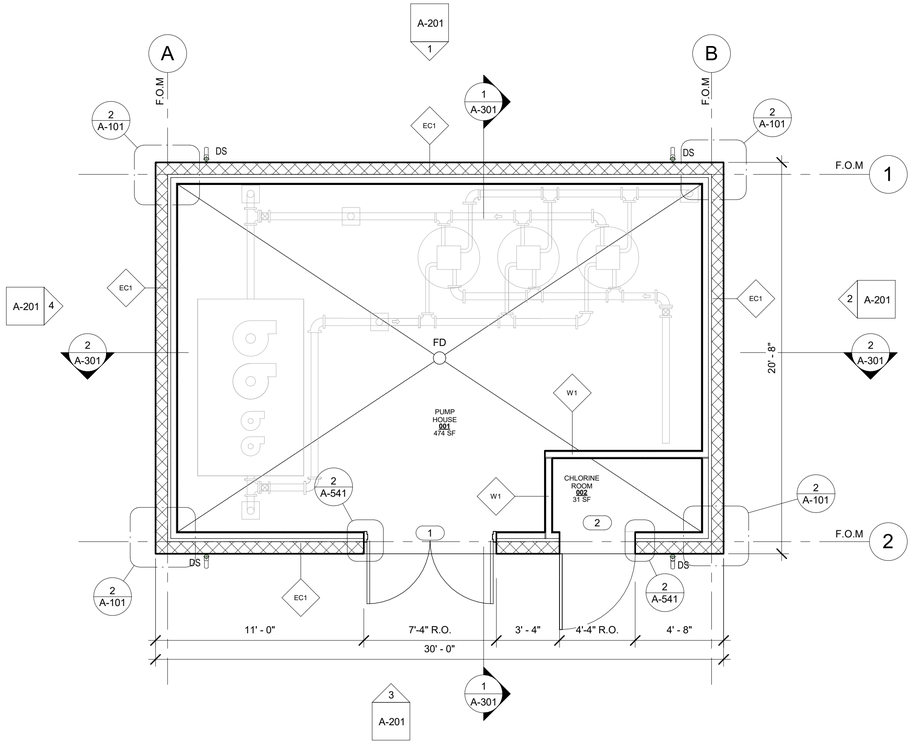

1 REFERENCE FLOOR PLAN

1/4" = 1'-0"

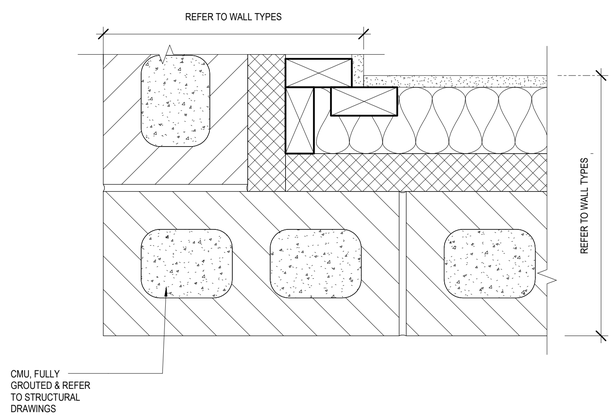

2 TYP. OUTSIDE CORNER @ CMU

3" = 1'-0"

GENERAL FLOOR PLAN NOTES

1. FOR WALL TYPES, FLOOR AND ROOF TYPES. REFER TO A-500 SERIES. UNLESS OTHERWISE NOTED. FINISHES PER SCHEDULE.
2. FOR DOOR TYPES AND FINISH SCHEDULE, REFER TO A-600 SERIES.
3. FLOOR DRAINS - SET FLOOR DRAINS (FD) 1" BELOW FF @ ALL AREAS.
4. FOR PLUMBING FIXTURES REFER TO MECHANICAL DRAWINGS.
5. FIELD CONFIRM ALL DIMENSIONS AND REPORT DISCREPANCIES IF ANY, TO ARCHITECT PRIOR TO CONSTRUCTION.
6. REFER TO STRUCTURAL, MECHANICAL, AND ELECTRICAL DRAWINGS FOR ADDITIONAL DIMENSION REQUIREMENTS.
7. DIMENSIONS SHOWN ARE TO FACE OF WALL STUDS, CENTERLINE OF OPENING (U.N.O.) AND ROUGH OPENING.
8. ALL FINISH FIXTURES SHALL MEET ADA ACCESSIBILITY REQUIREMENTS PER CURRENT IBC/UPC AND ANSI. 117.
9. MAINTAIN EXISTING WORK IN WATERTIGHT CONDITION DURING CONSTRUCTION.
10. OBTAIN ALL PERMITS & LICENSES.
11. COORDINATE WITH THE AUTHORITY HAVING JURISDICTION FOR REQUIRED APPROVALS.
12. FOR CODE ANALYSIS SEE "G1-201" SHEETS.

BID SET

Call 811 two business days before you dig

SHEET 63 OF 226

CAD NO.

NO.	REVISIONS	INT.	APP.	DATE
				07/20/21

ACTION	BY	DATE
DESIGNED		01/03/2025
DRAWN		01/03/2025
CHECKED (FIELD)		
CHECKED (HDQTS.)		

10347 REGISTERED ARCHITECT JAMES HILL STATE OF WASHINGTON

REGISTERED STAMP

WASHINGTON STATE PARKS AND RECREATION COMMISSION

NISQUALLY STATE PARK

PHASE 3A MAINTENANCE BUILDING AND WWTF

PUMP HOUSE -REFERENCE FLOOR PLANS

A-101

SCALE

AS SHOWN

PARKS FILE#

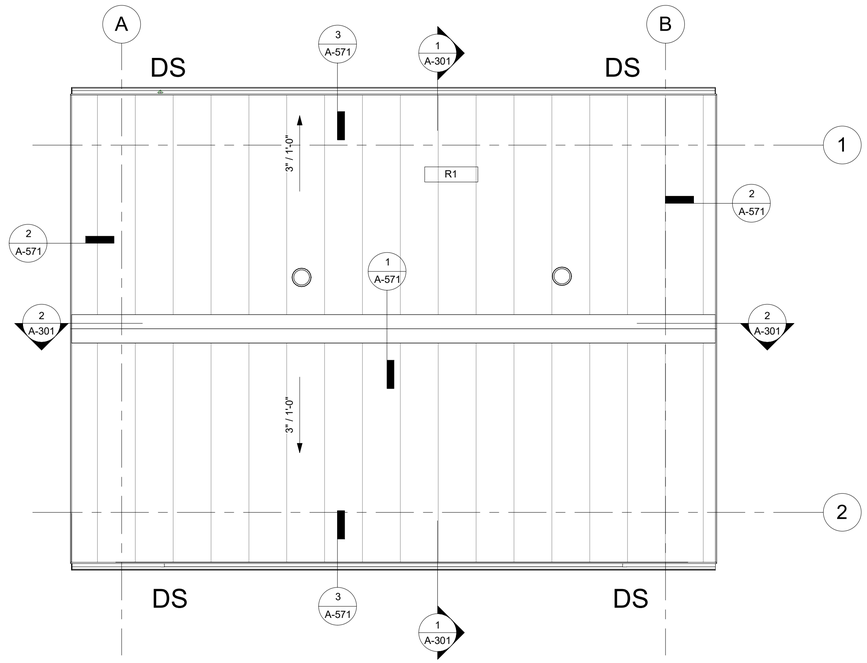

1 ROOF PLAN
1/4" = 1'-0"

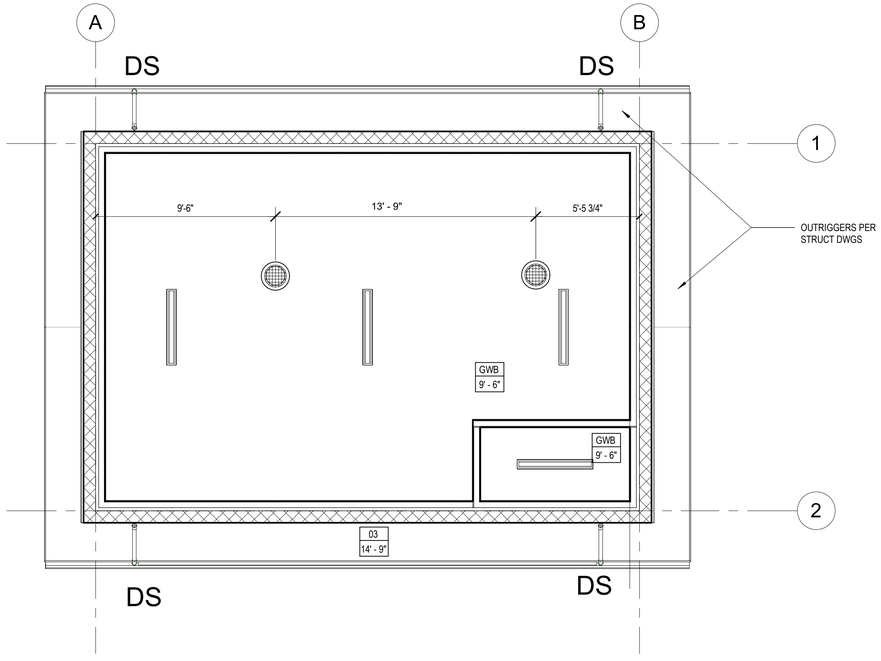

2 REFLECTED CEILING PLAN
1/4" = 1'-0"

ROOF PLAN GENERAL NOTES

1. ROOF TYPES ARE DESCRIBED ON SHEET A-501. TYPICAL DETAILS ARE FOUND ON SHEETS A-571
2. COORDINATE PENETRATIONS w/ MECHANICAL.
3. FIELD VERIFY ALL DIMENSIONS.
4. FABRICATE FLASHING FROM SPECIFIED SHEET METAL PRODUCTS. HEM ALL EXPOSED EDGES 1/2". DO NOT INSTALL FASTENERS WITHIN MOVING LAPS.
5. INSTALL IN ACCORDANCE WITH LOCAL BUILDING CODES, SPECIFICATIONS AND DETAILS, AND MANUFACTURER'S INSTALLATION REQUIREMENTS, WHICHEVER ARE MORE STRINGENT.
6. COUNTER FLASHINGS SHALL EXTEND OVER BASE FLASHINGS A MINIMUM OF 4".
7. TWO BEADS OF POLYURETHANE SEALANT SHALL BE CONCEALED WITHIN ALL MOVING LAPS (BOTH HORIZONTAL AND VERTICAL LAP LEGS).
8. INSTALL FLASHING & COUNTERFLASHING @ BASEWALL CONDITIONS SUCH THAT THEY CAN BE REMOVED & RE-INSTALLED AT THE TIME OF FUTURE RE- ROOF.
9. NEOPRENE WASHERED GASKET SCREWS (NWGS) TO BE USED IN ALL EXPOSED CONDITIONS.
10. SHEET METAL FLASHING SHALL BE LAPPED SLOPE- SENSITIVE.
11. SHEET METAL FASTENERS SHALL BE INSTALLED AT NO GREATER THAN 24" O.C.
12. INSULATION TO BE INSTALLED IN ACCORDANCE WITH ASCE-7 (CURRENT EDITION) WITH INCREASED FASTENING AT CORNERS AND PERIMETERS.
13. MAINTAIN MINIMUM SLOPE OF 1/2":12 AT ALL CRICKETS.

ROOF PLAN LEGEND

DS	DOWNSPOUT
PIPE PENETRATION	FOR ALL PIPE PENETRATIONS & PLUMBING VENT PIPE - REFER TO MECHANICAL DRAWINGS
SLOPE	SLOPE= 1/4" MINIMUM (DEPTH VARIES): COORDINATE WITH ROOF DETAILS
R#	ROOF TYPE. SEE SHEET A-502.

REFLECTED CEILING PLAN NOTES

1. THESE GENERAL NOTES APPLY TO ALL REFLECTED CEILING PLANS.
2. CEILING HEIGHTS ARE FROM FINISH FLOOR UNO.
3. TYPICAL CEILING HEIGHT TO BE 9' - 6", UNO.
4. NOT ALL LIGHTING, INCLUDING PENDANT AND WALL MOUNTED LIGHT FIXTURES, SHOWN. SEE ELECTRICAL.
5. U.N.O. - PAINT ALL GWB CEILINGS & SOFFITS PT-1 (SEE FINISH SCHEDULE)
6. SEE DETAIL FOR TYP SUSPENDED GRID DETAIL
7. COORDINATE LOCATION OF CEILING ACCESS DOORS WITH MECHANICAL & ELECTRICAL CONTRACTORS.
8. PROVIDE ADDITIONAL EDGE BLOCKING, CROSS BRACING & SUSPENDED SUPPORT WIRES OR ADDITIONAL FURRING FOR CEILING MOUNTED ITEMS (LIGHTING, ACCESS PANELS, GRILLES, CAMERAS, ETC.)

FLAG NOTES TO REFLECTED CEILING PLAN:

1 FULL HEIGHT WALL UP TO BOTTOM OF METAL DECKING AT ROOF ABOVE.

2 LOCATION OF EXTERIOR WALL ABOVE, BETWEEN LOWER AND UPPER ROOFS.

CEILING TYPES:

CEILING TYPES: XX TYPE / X' - X" HEIGHT

GWB 5/8" TYPE MOISTURE RESISENT GYPSUM WALL BOARD OVER 2X6 WOOD JOISTS @ 16" O.C.

REFLECTED CEILING PLAN LEGEND

12"X48" CEILING MOUNTED LIGHTING - REFER TO ELECT.

RECESSED SKYLITE TUBE W/ TAMPER PROOF

Call 811 two business days before you dig

SHEET 64 OF 226

BID SET

CAD NO.

NO.	REVISIONS	INT.	APP.	DATE
				07/20/21

ACTION	BY	DATE
DESIGNED		01/03/2025
DRAWN		01/03/2025
CHECKED (FIELD)		
CHECKED (HDQTS.)		

10347 REGISTERED ARCHITECT
JAMES HILL
STATE OF WASHINGTON

REGISTERED STAMP

WASHINGTON STATE PARKS AND RECREATION COMMISSION

NISQUALLY STATE PARK

PHASE 3A MAINTENANCE BUILDING AND WWTF

PUMP STATION -REFLECTED CEILING & ROOF PLANS
A-151

SCALE
AS SHOWN

PARKS FILE#

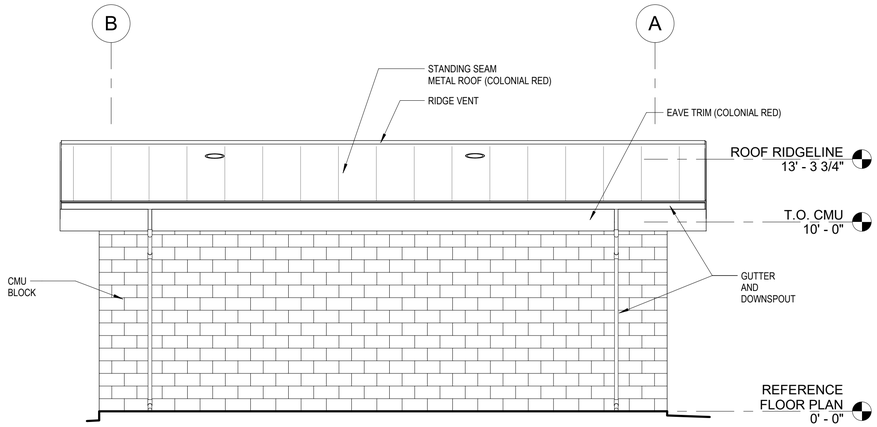

1 NORTH EXTERIOR ELEVATION
1/4" = 1'-0"

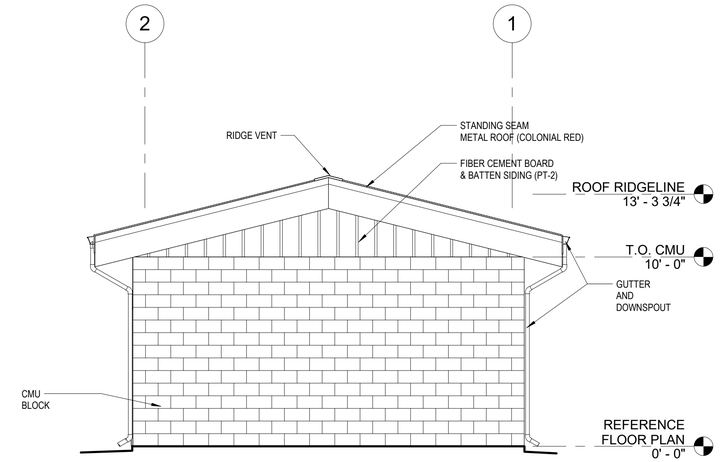

2 EAST EXTERIOR ELEVATION
1/4" = 1'-0"

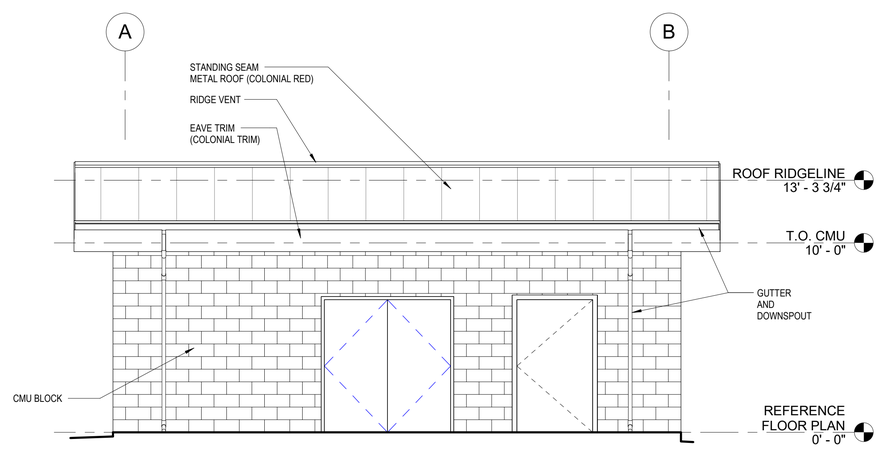

3 SOUTH EXTERIOR ELEVATION
1/4" = 1'-0"

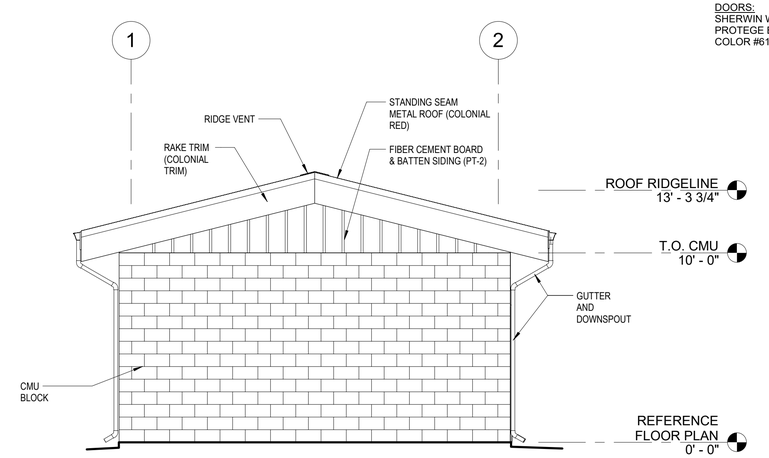

4 WEST EXTERIOR ELEVATION
1/4" = 1'-0"

EXTERIOR ELEVATION NOTES

1. ALL SHEET METAL AND MISC. METAL TO BE PRE-PAINTED. DO NOT PAINT STAINLESS STEEL.
2. DOOR TRIM TO BE PAINTED .

EXTERIOR ELEVATION LEGEND

CMU-1: CONCRETE MASONRY UNIT

SSMR-1: STANDING SEAM METAL ROOF - SEE GENERAL ROOF PLAN NOTES

F.C. SIDING - 2B: CEMENTITIOUS FIBER CEMENT BATTEN VERTICAL SIDING

EXTERIOR ELEVATION FINISH SCHEDULE

ROOF:
METAL ROOF SYSTEM
COLONIAL RED

EXTERIOR WALLS:
PT-1
SHERWIN WILLIAMS
CRACKED PEPPER
COLOR #9580

EXTERIOR TRIM:
PT-2
SHERWIN WILLIAMS
ANEW GRAY
COLOR #7030

DOORS:
SHERWIN WILLIAMS
PROTEGE BRONZE
COLOR #6153

Call 811 two business days before you dig

SHEET 65 OF 226

BID SET

CAD NO.

NO.	REVISIONS	INT.	APP.	DATE
	NOT FOR CONSTRUCTION			07/20/21

ACTION	BY	DATE
DESIGNED		01/03/2025
DRAWN		01/03/2025
CHECKED (FIELD)		
CHECKED (HDQTS.)		

10347 REGISTERED ARCHITECT
JAMES HILL
STATE OF WASHINGTON

REGISTERED STAMP

WASHINGTON STATE PARKS AND RECREATION COMMISSION

NISQUALLY STATE PARK

PHASE 3A MAINTENANCE BUILDING AND WWTF

PUMP HOUSE - EXTERIOR ELEVATIONS

A-201

SCALE
AS SHOWN

PARKS FILE#

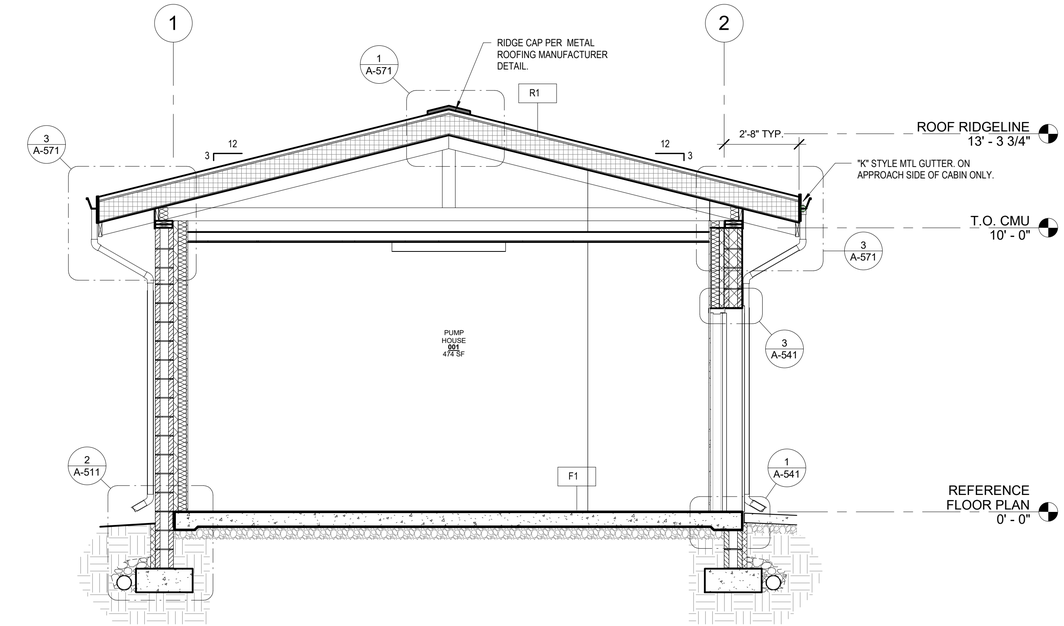

1 TRANSVERSE BUILDING SECTION
3/8" = 1'-0"

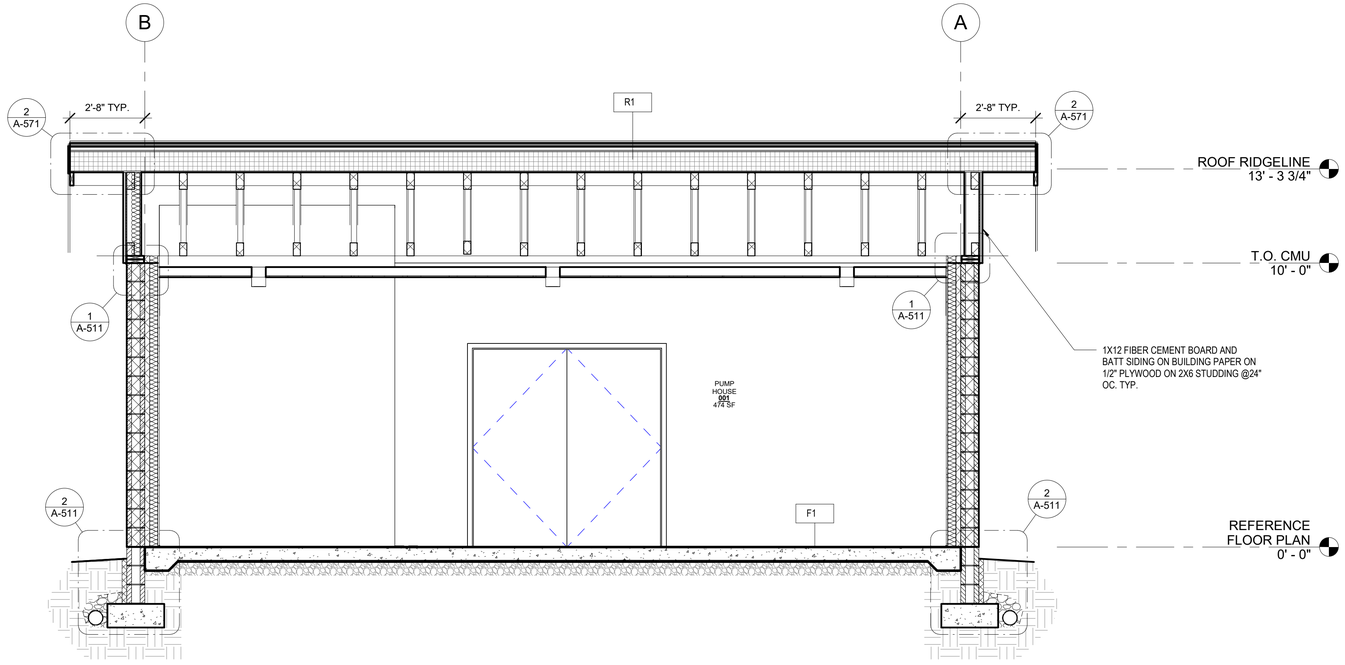

2 LONGITUDINAL BUILDING SECTION
3/8" = 1'-0"

Call 811 two business days before you dig

SHEET 66 OF 226

BID SET

CAD NO.

NO.	REVISIONS	INT.	APP.	DATE
				07/20/21

ACTION	BY	DATE
DESIGNED		01/03/2025
DRAWN		01/03/2025
CHECKED (FIELD)		
CHECKED (HDQTS.)		

10347 REGISTERED ARCHITECT
JAMES HILL
STATE OF WASHINGTON

REGISTERED STAMP

WASHINGTON STATE PARKS AND RECREATION COMMISSION

NISQUALLY STATE PARK

PHASE 3A MAINTENANCE BUILDING AND WWTF

PUMP HOUSE - BUILDING SECTIONS

A-301

SCALE
AS SHOWN

PARKS FILE#

EXTERIOR WALL TYPE

PER PLAN
EM-

DESCRIPTION:
EXTERIOR WALL
CONCRETE
MASONARY UNITS

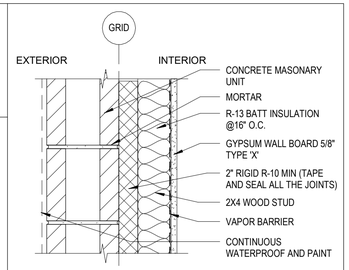

EM1 AS INDICATED ABOVE

PER PLAN
EW-
-

DESCRIPTION:
EXTERIOR WALL
WITH WOOD STUD.

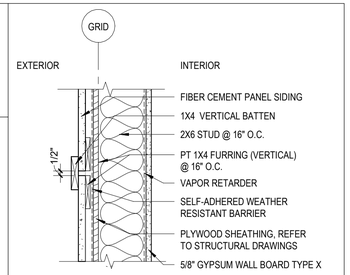

EW1 AS INDICATED ABOVE

INTERIOR WALL TYPES

PER PLAN
W1-
-

DESCRIPTION: 2X4
STUD PARTITION
WALL

1-HOUR RATED
PER UL U407

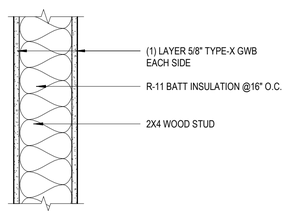

W2 AS INDICATED ABOVE

ROOF TYPE

R1

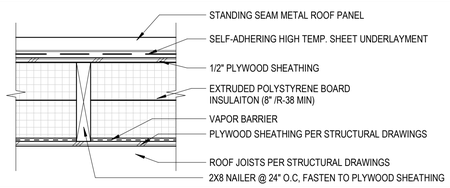

FLOOR TYPE

F1

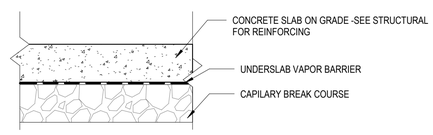

TYPICAL MOUNTING HEIGHTS - UNLESS NOTED OTHERWISE

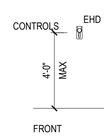

ELECTRIC
HAND DRYER

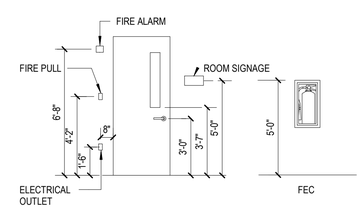

BARRIER-FREE
DOORS AND
HARDWARE

WALL TYPES NOTES

1. SUBSTITUTE BACKER BOARD FOR GWB AT TILE.
2. REFER TO FINISH SCHEDULE FOR WALL FINISH.
3. ALL ASSEMBLY TYPES ARE DRAWN IN SECTION UNLESS A UNIQUE CONDITION REQUIRES AN ADDITIONAL PLAN VIEW OF THE ASSEMBLY.
4. IN AN ASSYMMETRICAL WALL CONDITION, THE EXTRA LAYERS WILL OCUR ON THE SIDE OF THE WALL THE TAG IS LOCATED ON.
5. PROVIDE BACKING IN WALLS FOR CASEWORK, MESSAGE BOARDS, TOILET ACCESSORIES, OFOI FURNISHINGS AND ALL OTHER WALL SUPPORTED ITEMS. REFER TO INTERIOR ELEVATIONS AND PLANS FOR LOCATIONS.
6. PROVIDE BACKING AT ELECTRICAL AND COMMUNICATIONS ROOMS AS REQUIRED PER THE ELECTRICAL REQUIREMENTS.
7. TOP AND BOTTOM RUNNERS: ALIGN AND ANCHOR TO BUILDING STRUCTURAL MEMBERS AT EACH END AND AT 24" O.C.
8. WHERE METAL STUD DEFLECTION TRACKS ARE USED, PROVIDE AT TOP OF FULL WALL HEIGHT PARTITIONS TO ALLOW STRUCTURE TO DEFLECT WITHOUT IMPOSING LOADS ON WALL.
9. AT CEILING AND SOFFIT FRAMING:
   A. INSTILL FRAMING AT 16" O.C. AND CONNECT ENDS OF STUD TO HORIZONTAL RUNNER AND SECURELY ATTACH TO BUILDING STRUCTURE OR WALL FRAMING.
   B. MID-SPAN SUPPORTS: FOR METAL WALL FRAMING: ANCHOR TO STRUCTURE ABOVE.
   C. PARTITION CORNERS: MINIMUM OF (3) STUDS.
10. AT AIR BARRIER WALLS PROVIDE:
   A. SEALANT BETWEEN RUNNERS AND SUBSTRATE.
   B. SEALANT BETWEEN WALL AND ADJACENT VERTICAL SURFACES.
   C. SEAL AIR BARRIER MEMBRANE TO ADJACENT SURFACE, FULL PERIMETER OF WALL.
   D. SEALANT AROUND ALL OPENINGS AT ELECTRICAL DEVICES, DUCTS, AND PIPING AND STRUCTURE PENETRATING WALL SURFACES.
11. REFER TO GENERAL SHEETS (**G-301**) FOR AIR BARRIER LOCATIONS.
12. AT STC RATED WALLS, PROVIDE:
   A. ACOUSTIC SEALANT BETWEEN RUNNERS AND SUBSTRATE.
   B. ACOUSTIC SEALANT BETWEEN STUDS AND ADJACENT VERTICAL SURFACES.
   C. ACOUSTIC SEALANT AROUND ALL OPENINGS AT ELECTRICAL DEVICES, DUCTS AND PIPING AND STRUCTURE PENETRATING SURFACES.

ASSEMBLY TYPES

E = EXTERIOR
R = ROOF
F = FLOOR

W = INTERIOR WOOD STUD
EW = EXTERIOR WOOD STUD
S = INTERIOR METAL STUD
C = CONCRETE
M = MASONRY
X = MISCELLANEOUS INTERIOR WALL MATERIAL

TOP OF WALL CONDITION

NOTE: ALL WALLS AND GWB EXTEND TO STRUCTURE, UNLESS NOTED OTHERWISE. REFER TO PARTITION HEIGHTS BELOW FOR WALLS THAT DO NOT EXTEND TO STRUCTURE. REFER ALSO TO STRUCTURAL SHEETS FOR LOCATIONS OF SHEAR WALL AND REQUIRED SHEATHING.

a. PARTIAL HEIGHT PARTITION
b. PARTITION - EXTEND GWB TO 6" ABOVE UPPERMOST CEILING ON BOTH SIDES OF WALL AND BRACE STUDS TO STRUCTURE ABOVE AS REQUIRED
c. FULL HEIGHT WALL - STUDS EXTEND TO STRUCTURE, EXTEND GWB TO 6" ABOVE UPPERMOST CEILING ON BOTH SIDES OF WALL.

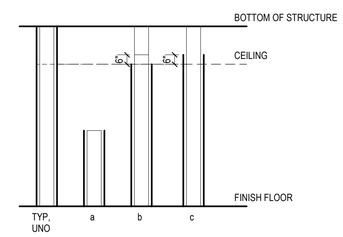

INTERIOR ELEVATION GENERAL NOTES

- REFER TO NEW FLOOR PLAN AND EQUIPMENT LEGEND. PROVIDE BACKING AS REQUIRED AND COORDINATE FINAL LOCATION WITH OWNER PRIOR TO COVER.
- DIMENSIONS FOR MOUNTING HEIGHTS ARE TO CENTER OF BOX AND TYPICAL (UNO).
- ALL CONDITIONS ILLUSTRATED ARE TYPICAL, (UNO).
- ALL SHELVES AND DIVIDERS ARE ADJUSTABLE, UNLESS NOTED OTHERWISE.
- WHITE MELAMINE AT ALL INTERIOR CASEWORK BOXES, SHELVING AND DRAWERS, UNO.
- FIELD VERIFY DIMENSIONS OF ALL CASEWORK PRIOR TO FABRICATION. CONTACT ARCHITECT IF ANY DISCREPANCIES ARE FOUND BETWEEN DRAWINGS AND FIELD CONDITIONS
- ALL EXPOSED PLUMBING TO BE INSULATED
- REFER TO NEW FLOOR PLAN FOR ALL EMERGENCY POWER DESIGNATIONS
- REFER TO NEW FLOOR PLAN AND EQUIPMENT SCHEDULE FOR SPECIFIC REQUIREMENTS, SYSTEMS AND FINISHES. NOT ALL EQUIPMENT IS SHOWN IN ELEVATIONS.

Call 811 two business days before you dig

BID SET

SHEET 67 OF 226

CAD NO.

NO.	REVISIONS	INT.	APP.	DATE
				07/20/21

ACTION	BY	DATE
DESIGNED		01/03/2025
DRAWN		01/03/2025
CHECKED (FIELD)		
CHECKED (HDQTS.)		

10347 REGISTERED ARCHITECT
JAMES HILL
STATE OF WASHINGTON

REGISTERED STAMP

WASHINGTON STATE PARKS AND RECREATION COMMISSION

NISQUALLY STATE PARK

PHASE 3A MAINTENANCE BUILDING AND WWTF

PUMP - WALL, FLOOR, ROOF TYPES & INTERIOR ELEVATIONS
A-501

SCALE
AS SHOWN

PARKS FILE#

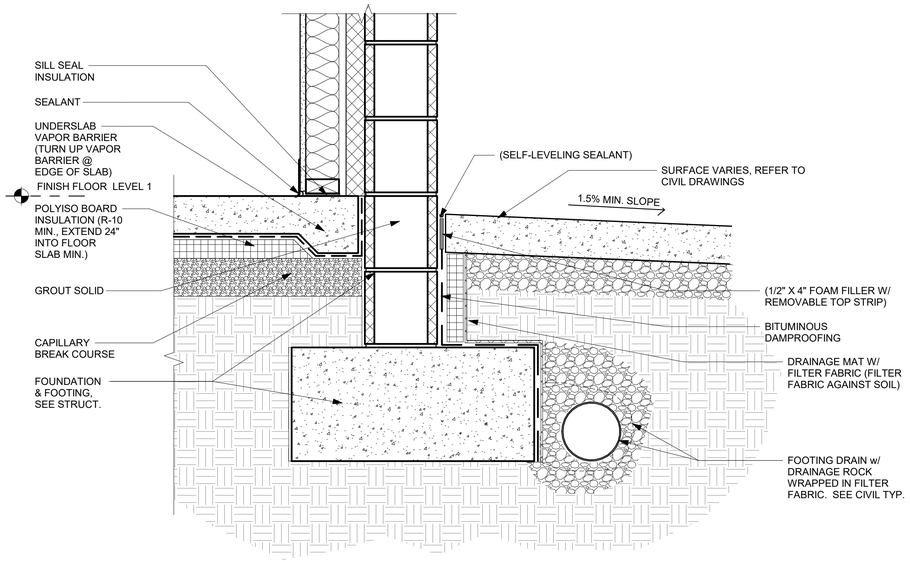

2 TYP. FOUNDATION @ CMU

1 1/2" = 1'-0"

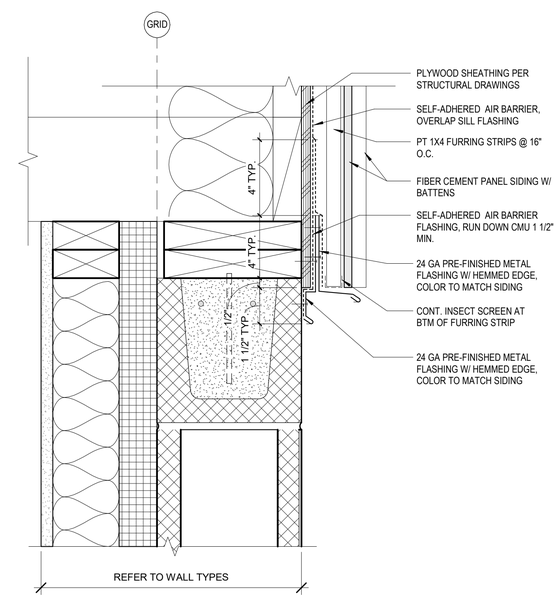

1 DETAIL @ WALL TO GABLE

3" = 1'-0"

BID SET

Call 811 two business days before you dig

SHEET 68 OF 226

CAD NO.

NO.	REVISIONS	INT.	APP.	DATE
				07/20/21

ACTION	BY	DATE
DESIGNED		01/03/2025
DRAWN		01/03/2025
CHECKED (FIELD)		
CHECKED (HDQTS.)		

10347 REGISTERED ARCHITECT
JAMES HILL
STATE OF WASHINGTON

REGISTERED STAMP

WASHINGTON STATE PARKS AND RECREATION COMMISSION

NISQUALLY STATE PARK

PHASE 3A MAINTENANCE BUILDING AND WWTF

FOUNDATION & EXTERIOR DETAILS

A-511

SCALE

AS SHOWN

PARKS FILE#

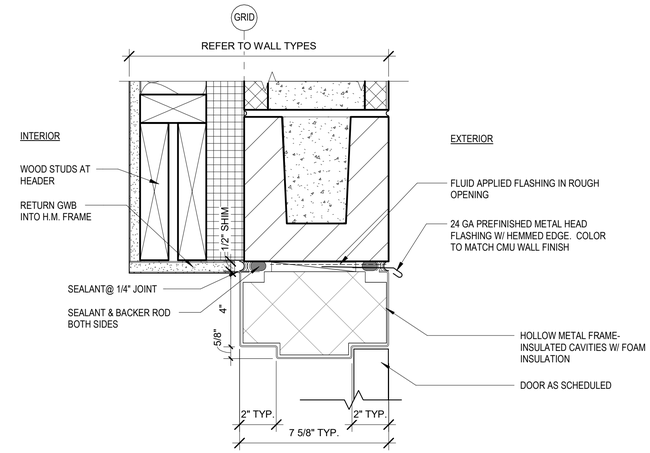

3 EXTERIOR HEAD @ H.M. DOOR

3" = 1'-0"

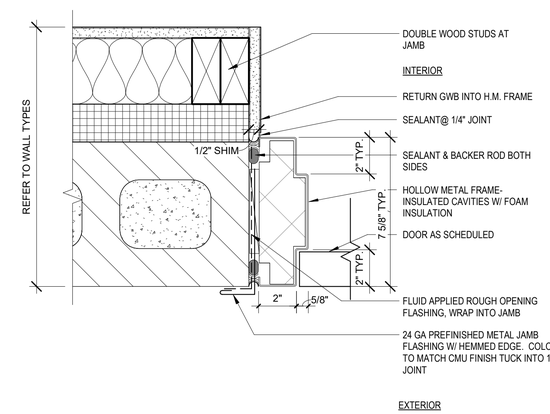

2 EXTERIOR H.M. DOOR JAMB

3" = 1'-0"

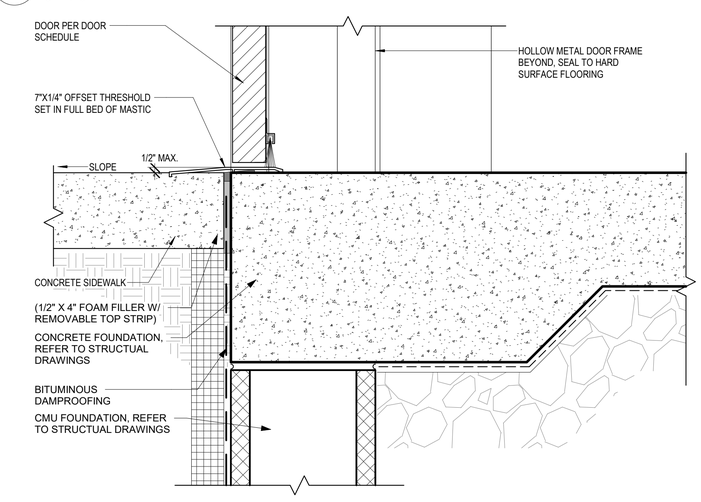

1 EXTERIOR HOLLOW METAL THRESHOLD

3" = 1'-0"

BID SET

Call 811 two business days before you dig

SHEET 69 OF 226

CAD NO.

NO.	REVISIONS	INT.	APP.	DATE
				07/20/21

ACTION	BY	DATE
DESIGNED		01/03/2025
DRAWN		01/03/2025
CHECKED (FIELD)		
CHECKED (HDQTS.)		

10347 REGISTERED ARCHITECT JAMES HILL STATE OF WASHINGTON

REGISTERED STAMP

WASHINGTON STATE PARKS AND RECREATION COMMISSION

NISQUALLY STATE PARK

PHASE 3A MAINTENANCE BUILDING AND WWTF

PUMP HOUSE - EXTERIOR DOOR & FRAME DETAILS

A-541

SCALE

AS SHOWN

PARKS FILE#

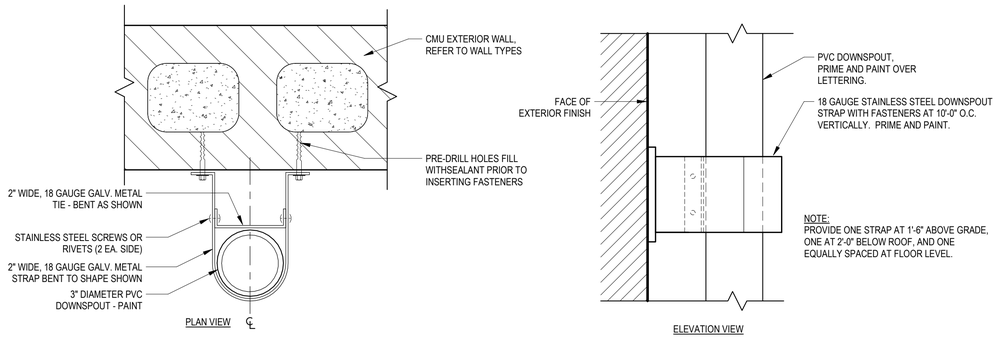

4 TYP. DOWNSPOUT BRACKET
3" = 1'-0"

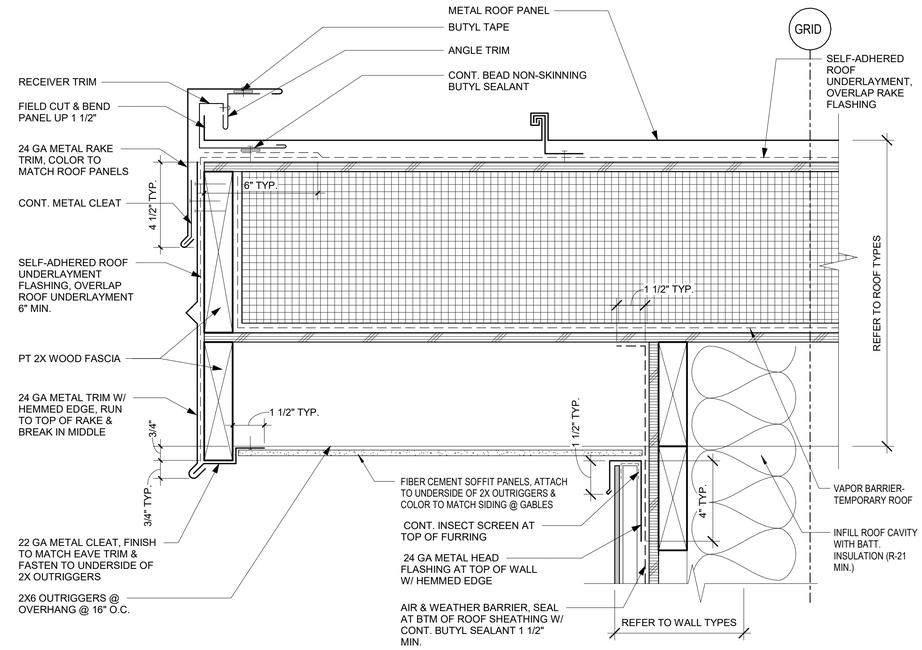

2 TYP. RAKE @ METAL ROOF
3" = 1'-0"

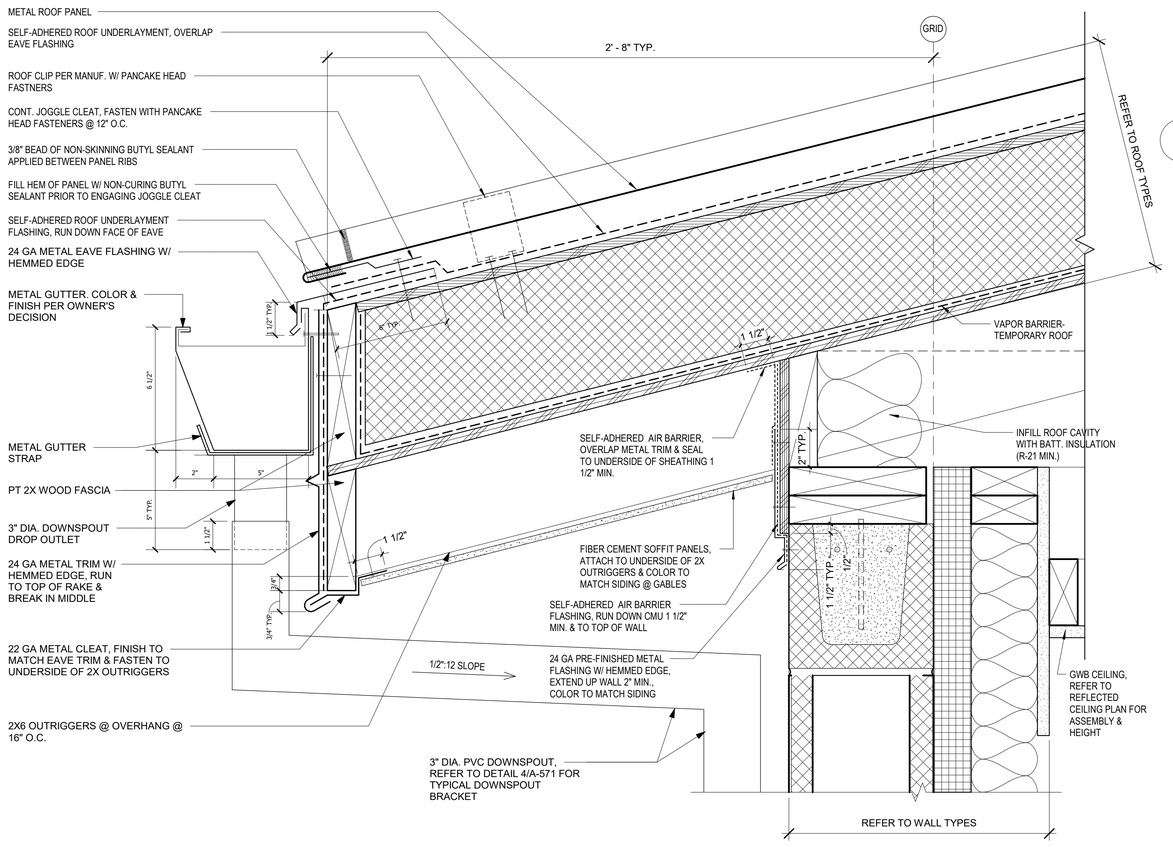

3 TYP. EAVE / GUTTER @ METAL ROOF
3" = 1'-0"

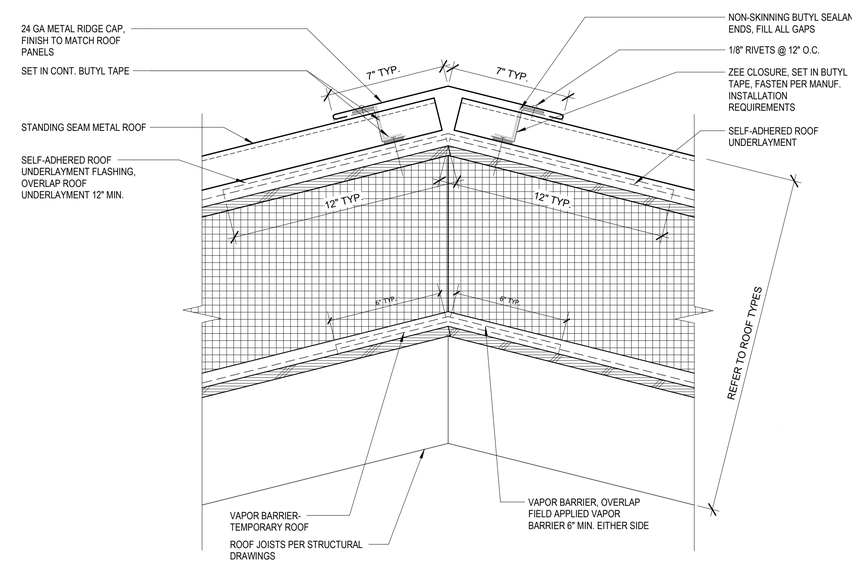

1 TYP. RIDGE @ METAL ROOF
3" = 1'-0"

BID SET

Call 811 two business days before you dig

SHEET 70 OF 226

CAD NO.

NO.	REVISIONS	INT.	APP.	DATE
				07/20/21

ACTION	BY	DATE
DESIGNED		01/03/2025
DRAWN		01/03/2025
CHECKED (FIELD)		
CHECKED (HDQTS.)		

10347 REGISTERED ARCHITECT
JAMES HILL
STATE OF WASHINGTON

REGISTERED STAMP

WASHINGTON STATE PARKS AND RECREATION COMMISSION

NISQUALLY STATE PARK

PHASE 3A MAINTENANCE BUILDING AND WWTF

PUMP HOUSE - ROOF DETAILS

A-571

SCALE
AS SHOWN

PARKS FILE#

DOOR SCHEDULE

NO.	ROOM NAME	DOOR TYPE	DOOR WIDTH	DOOR HEIGHT	DOOR THICKNESS	DOOR MATERIAL	DOOR FINISH	FRAME TYPE	FRAME MATERIAL	FRAME FINISH	HARDWARE GROUP	REMARKS
1	PUMP HOUSE	A	6' - 8"	7' - 0"	1 3/4"	HM	PAINT	F1	HM	PAINT	STORAGE	
2	CHLORINE ROOM	A	4' - 0"	7' - 0"	1 3/4"	HM	PAINT	F1	HM	PAINT	CHLORINE	

DOOR TYPES

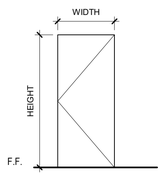

A FLUSH - INSULATED HOLLOW METAL DOOR

DOOR FRAMES

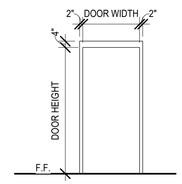

F1 HOLLOW METAL

DOOR NOTES

1. ALL DOOR HARDWARE TO CONFORM WITH A.D.A. STANDARDS.
2. ALL DOOR HARDWARE HEIGHTS TO CONFORM WITH A.D.A. STANDARDS.
3. PRIOR TO CONSTRUCTION, SUBMIT DOOR HARDWARE TO ARCHITECT FOR APPROVAL.
4. CONFIRM DOOR FRAME DIMENSIONS AND COMPATIBILITY WITH DOOR HARDWARE PRIOR TO IMPLEMENTATION.
5. SHOP PRIME ALL HOLLOW METAL FRAMES.
6. REFER TO FINISH LEGEND FOR ALL DOOR AND FRAME FINISH REFERENCES.
7. PROVIDE ACOUSTICAL INSULATION AND SEALANTS AT DOOR AND FRAMES INSTALLED .
8. DOORS THAT ARE NOT AUTOMATIC SHALL HAVE ACCESSIBLE FEATURES AND HARDWARE PER CURRENT IBC AND ANSI 117
9. EXITING DOORS SHALL HAVE APPROVED PANIC HARDWARE PER CURRENT IBC
10. TACTILE SIGNS SHALL BE INSTALLED AS PER CURRENT IBC AND ANSI 117

GENERAL FRAME & DOOR NOTES

1. DOOR & FRAME SCHEDULE NOTES APPLY TO ALL DOOR & FRAME.
2. DIMENSIONSOF ALL OPENINGS TO BE FIELD VERIFIED PRIOR TO FABRICATION.
3. PROVIDE 1/2" MAX SHIM SPACE AT HEAD, JAMB AND SILL AT OPENINGS.
4. FRAME MANUFACTURER SHALL COORDINATE LOCATIONS OF CONCEALED CONDUIT & J-BOXES FOR SYSTEM HARDWARE PRIOR TO MANUFACTURING OF FRAMES & COORDINATE WITH ASSOCIATED HARDWARE & DEVICES.
5. SEE SPECIFICATIONS SECTION 08 71 00 DOOR HARDWARE FOR DOOR HARWARE SET NOTED IN DOOR SPECIFICATIONSOPENING SCHEDULE.
6. ALL HOLLOW METAL DOORS AND FRAMES ARE TO BE PAINTED.

NOTES:
1. HARDWARE GROUPS SHOWN IN SPECIFICATIONS.
2. DETAILS SHOWN ON DOOR FRAME BELOW.
3. HOLLOW METAL FRAMES TO BE PAINTED TO MATCH RUBBER BASE, PER FINISH SCHEDULE.
4. HOLLOW METAL DOORS TO BE PAINTED TO MATCH ADJACENT SIDING COLOR.
5. WOOD DOORS TO BE STAINED CLEAR MAPLE.

ABBREVIATIONS:

FF	FACTORY FINISH
HM	HOLLOW METAL
P	PAINT
WD	WOOD
GD	GARAGE DOOR
F	FLUSH- INSULATED HOLLOW METAL DOOR
E	EXTERIOR

BID SET

Call 811 two business days before you dig

SHEET 71 OF 226

CAD NO.

07/20/21	DATE
	APP.
	INT.
NOT FOR CONSTRUCTION	REVISIONS
	NO.

ACTION	BY	DATE
DESIGNED		01/03/2025
DRAWN		01/03/2025
CHECKED (FIELD)		
CHECKED (HDQTS.)		

10347 REGISTERED ARCHITECT
JAMES HILL
STATE OF WASHINGTON

REGISTERED STAMP

WASHINGTON STATE PARKS AND RECREATION COMMISSION

NISQUALLY STATE PARK

PHASE 3A MAINTENANCE BUILDING AND WWTF

PUMP HOUSE - -DOOR & FRAME SCHEDULE

A-601

SCALE
AS SHOWN

PARKS FILE#

FINISH SCHEDULE

Number	Name	FLOOR	BASE	NORTH	EAST	SOUTH	WEST	Ceiling Finish	COUNTER	CABINETS	BACKSPLASH	REMARKS-
001	PUMP HOUSE	C-1	RB-1	PT-1	PT-1	PT-1	PT-1	GWB-1				
002	CHLORINE ROOM	C-1	RB-1	PT-1	PT-1	PT-1	PT-1	GWB-1				

*BASIS OF DESIGN - ARCHITECT HAS FULL SELECTION OF COLOR

	Tag	Material	Manufacturer	Product	Notes
FLOOR	C-1	CONCRETE - SEALED		PER ARCHITECTURAL SPECIFICATIONS	(REFER TO SPECIFICATIONS)
WALLS	PT-1	PAINT (FIELD)	PARKER PAINT	ULTRATECHL C122; EGGSHELL ENAMEL; COLOR: CL 2851 W FILTERED	
BASE	RB-1	RUBBER BASE	ARMSTRONG	STYLE; COVED WALL BASE / COLOR: GREY MIST, 4" BASE	(REFER TO DRAWINGS)
			-		
CASEWORK					
CEILING	GWB-1	PAINTED GYPSUM DRYWALL	PARKER PAINT	ULTRA TECH C122 EGGSHELL ENAMEL	MATCH ADJACENT WALL
DOORS	DF-1	DOOR FRAME (HM - PAINT)	PARKER PAINT	ULTRATECH C144 SEMI-GLOSS ENAMEL, CLW1043W "FOSSIL DUST"	(REFER TO DRAWINGS)
	DF-2	SOLID CORE DOOR- PLAM & PAINT	PARKER PAINT	ULTRATECH C144 SEMI-GLOSS ENAMEL, C2851W "FILTERED"	(REFER TO DRAWINGS)
MISC.					

BID SET

Call 811 two business days before you dig

SHEET 72 OF 226

CAD NO.

07/20/21	DATE
	APP.
	INT.
NOT FOR CONSTRUCTION	REVISIONS
	NO.

ACTION	BY	DATE
DESIGNED		01/03/2025
DRAWN		01/03/2025
CHECKED (FIELD)		
CHECKED (HDQTS.)		

10347 REGISTERED ARCHITECT
JAMES HILL
STATE OF WASHINGTON

REGISTERED STAMP

WASHINGTON STATE PARKS AND RECREATION COMMISSION

NISQUALLY STATE PARK

PHASE 3A MAINTENANCE BUILDING AND WWTF

PUMP HOUSE - FINISH SCHEDULE

A-621

SCALE
AS SHOWN

PARKS FILE#

STRUCTURAL NOTES

GENERAL NOTES

These general notes are to be used as a supplement to the specifications and apply to all structural components of the building and foundation. Any discrepancies found among the drawings, the specifications, these general notes and the site conditions shall be reported to the Registered Design Professional, who shall correct such discrepancy in writing. Any work done by the Contractor after discovery of such discrepancy, but prior to correction of such discrepancy, shall be done at the Contractor's risk. The Contractor is responsible for conforming to all OSHA and WISHA safety standards. The Contractor is responsible for all bracing and shoring during construction.

CODES

All methods, materials, and workmanship shall conform to the 2021 International Building Code (IBC) as amended and adopted by the local building authority. All reference to other Codes and Standards (ACI, ASTM, etc.) shall be for the latest or most current edition available, except as designated by the governing code.

SECTIONS AND DETAILS

Sections and details showing reinforcing, bolts, framing members, and connections are intended to illustrate specific details. No attempt has been made to show all elements passing through a specific section or detail. Construction details not specifically shown on the drawings shall follow similar details of this project, as approved by the Registered Design Professional.

COORDINATION

The Contractor shall verify and/or coordinate all dimensions and conditions shown on the contract documents. Refer to Architectural, Mechanical and Electrical drawings for all dimensions not shown, for size and position of openings, breaks in structural members due to architectural treatment, location of sumps, etc.

DEFERRED SUBMITTALS

Pre-Engineered Steel Building

DESIGN CRITERIA

Structural design has been performed per the structural provisions of the International Building Code, 2021 edition.

Dead Loads:

Roof & Walls: Structure weight plus two (2) PSF collateral dead load plus additional building dead loads (see Specification Section 10 34 19).

Live Loads:

Roof: L_r = 25 PSF
Snow: P_g = 35 PSF, C_e = 1.2, I_s = 1.0, C_t = 1.2
Wind: V = 100 MPH, Exposure B, Ke = 1.0
Seismic: I_E=1.0, S_s = 1.19g, S_1 = 0.42g, Site Class D, S_{DS} = 0.95g, S_{D1} = 0.42g, Risk Category II, Ordinary Steel Moment Frames

SOIL CLASSIFICATION & BEARING

Recommendations made in the GeoEngineers Geotechnical Report dated 12/22/2020 were used for the design of the structure.

Allowable soil pressure: 3000 psf (with allowable ½ increase for wind/seismic loading)

SHOP DRAWINGS

Dimensions and quantities are the responsibility of the Contractor, despite review by the Registered Design Professional. Submit shop drawings to the Design Professional for the following, prior to any fabrication or construction:

- Reinforcing Steel.
- Structural and miscellaneous steel including welds, welded studs and anchors.
- Pre-engineered metal building systems and components.

CONSTRUCTION INSPECTION

The Building Official shall make structural inspections as required by the local jurisdiction. Construction inspection shall be in accordance with the following provisions of the 2021 IBC:

Section 104.4 Inspections
Section 110 Inspections
Chapter 17 Structural Tests & Special Inspections

The Special Inspector shall be hired by the Owner to provide special inspection as indicated in the attached "Table of Special Inspections." The Special Inspector shall submit a summary of the proposed testing program for review and approval. Submit all inspection reports directly to the Building Official, Owner and/or Registered Design Professional within two (2) days after each inspection. Any discrepancies shall be brought to the Contractor's immediate attention, and if not corrected, to the Building Official and Registered Design Professional.

QUALITY ASSURANCE

The Contractor responsible for the construction of any of the elements listed in the "Table of Special Inspections" shall submit a Statement of Responsibility to the Building Official and Owner. The Statement of Responsibility shall contain acknowledgment of awareness of the special requirements involved with special inspections.

CONSTRUCTION OBSERVATION

Construction observation by the Registered Design Professional is for general conformance only and does not relieve the Contractor from any responsibility. The Design Professional shall be notified 48 hours prior to all concrete pours. The Design Professional may inspect the following structural elements prior to concealment:

- Reinforcing steel.
- Pre-Engineered metal building.

STRUCTURAL CONCRETE

All concrete shall meet the requirements of ACI-301, "Specifications For Structural Concrete For Buildings." Proportioning of ingredients for each concrete mix shall be by Method 2 or the alternate procedure given in ACI-301. Place concrete per ACI-304 and conform to ACI-604 (306) for cold weather placement and ACI-605 (305) for hot weather placement. Do not over-vibrate. Concrete shall be placed monolithically between construction or control joints. Protect all concrete from premature drying, excessive hot or cold temperature for seven days after placing.

MATERIALS

Cement: ASTM C150, Type I.
Coarse and fine aggregate: ASTM C33.
Water shall be clean and potable.

ADMIXTURES

Water reducing admixture: ASTM C494. Admixtures shall be used in exact accordance with manufacturer's instructions.

Synergized performance systems: admixtures to produce flowable concrete may be used subject to Registered Design Professional's approval.

Air entrainment: ASTM C260, Entrain 5% ± 1% by volume in all exterior, exposed concrete.

No other admixture is permitted unless approved by the Registered Design Professional.

STRENGTH

Twenty-eight day compressive strength shall be: 4500 psi
Slump: 4" ± 1 inch.
Maximum Water/cement ratio: 0.46

REINFORCING STEEL

Reinforcing steel shall conform to ASTM A615 or A706 Grade 60 (except No.3 stirrups may be grade 40), new billet stock, and securely tied with #16 double annealed wire. Reinforcement shall be detailed in accordance with ACI 315. Reinforcement shall be placed in accordance with CRSI "Recommended Practice For Placing Reinforcing Bars". Reinforcement shall be adequately supported and held in place as no placing, pulling, or shifting of reinforcing steel in wet concrete is allowed.

CONCRETE COVER

The following concrete cover shall be provided for reinforcement:
- Concrete cast against and permanently exposed to earth: 3"
- Concrete exposed to earth or weather:
  No.6 to No.18 bars: 2"
  No.5 bars, W31 or D31, and smaller: 1 1/2"
- Concrete not exposed to earth or weather: 1 1/2"

CONSTRUCTION OR CONTROL JOINTS

Construction or control joint spacing in slabs shall not exceed 12'-6" on center except as directed by the Registered Design Professional.

FORMWORK AND SHORING

Follow recommended practice for concrete formwork (ACI-347). All shoring shall be the responsibility of the Contractor. Formwork supports and shoring shall be designed to provide finished concrete surfaces at all faces level, plumb, and true to the dimensions and elevations shown. Tolerances and variations shall be as specified.

FLOOR FLATNESS AND LEVELNESS

The Flatness and Levelness of the floor shall be measured per ASTM E 1155: Standard Test Method for Determining Floor Flatness and Levelness Using the F-Number System.

Specified Overall F-Number: FF = 20, FL = 15
Minimum Local F-Number: FF = 15, FL = 10

SHRINK COMPENSATING GROUT

F'c = 7,000 psi minimum in 28 days. Fill up or pack entire space under plates or in joints avoiding air pockets.

CONCRETE ANCHORS, INSERTS and EMBEDDED ITEMS

Expansion anchors and inserts shall be ICC listed and shall have working strength capacity equal to the ultimate capacity divided by 4. Expansion and screw-in anchors and inserts shall be as manufactured by HILTI, Simpson, Dewalt or approved equivalent.

Concrete anchor bolts shall meet the quality of ASTM F1554 grade 36 bolts and shall have a standard bolt head or an equal deformity in the embedded portion. Galvanize anchor bolts in contact with pressure treated lumber per ASTM A153, Class C.

Electrical conduit in slabs shall be placed at the mid-depth of the slab at a minimum spacing of three times the conduit diameter. Conduit outside diameter shall not exceed one-third of the slab thickness.

"Wet setting" of any item shown inserted, or embedded in concrete is not allowed without prior approval of the Registered Design Professional.

ADHESIVE FOR CONCRETE DOWELING

Threaded rods, bolts or reinforcing bars shown doweling into existing concrete shall use Hilti HIT-HY200 or HIT-RE 500 V3, Simpson AT-XP or SET-XP, Dewalt AC100+ Gold or Pure110+, or approved equal. The Contractor shall comply with the manufacturer's recommendations for all installation requirements including: drill bit size, embedment depth, hole cleaning, adhesive application, and special inspection requirements.

FOUNDATION NOTES

Bottom of exterior foundations shall be placed a minimum of 24" below finished grade. Backfill shall be placed and compacted in a manner that does not damage the foundation. Dowel all interior foundation walls and continuous footing steel into perimeter footings with elbow bars. Use 24" x 24" elbow bars of matching size at all bent horizontal steel.

POWDER OR POWER ACTUATED FASTENERS (PAFs)

Use HILTI X-HSN24 fastener, or approved equal, for fastening steel decking to steel framing.

STRUCTURAL STEEL

All steel shall be fabricated and erected in accordance with AISC Specification for the Design, Fabrication and Erection of Structural Steel for Buildings, Latest Edition. Obtain approval of the Registered Design Professional prior to site cutting, making adjustments or performing field welds not scheduled or shown on plans or details. ASTM F-1852 twist-off type bolts may be used in place of all ASTM A325 bolts.

MATERIALS

- Rolled W Shapes: ASTM A992, Fy = 50 ksi
- Misc. Shapes and Plates: ASTM A36, Fy = 36 ksi
- Rectangular Tube Steel: ASTM A500 Gr. B, Fy = 46 ksi
- Steel Pipe: ASTM A53, Grade B, Fy = 35 ksi min.
- Framing Bolts: ASTM A307, UNO

Shapes and plates shall be galvanized per ASTM A123 where noted. Bolts, screws, nuts, washers, and other related fasteners shall be galvanized per ASTM F2329 where noted.

GALVANIZED STEEL FLOOR DECK

Steel decking shall be 1.5C22 per the Steel Deck Institute Specifications, 22 gage, 1-1/2" deep, wide rib deck, installed per the manufacturer's recommendation.

Deck Galvanizing: ASTM A653, Structural Quality, G-60 minimum galvanized coating.

Fastening steel decking: Provide (4) 5/8" puddle welds per sheet to supports, provide #8 side lap screws at 24" o.c. between adjacent sheets. Fasten deck to the perimeter framing running parallel to deck flutes with PAFs at 24" maximum o.c. All PAFs shall conform to the Manufacturer's requirements. Alternative fasteners and spacings may be used provided allowable diaphragm shear is a minimum of 220 plf (ASD) for seismic loads.

WELDING

All welded connections shall conform strictly to American Welding Society standards and the International Building Code. Welding electrodes shall be E70xx. All welders shall be AWS and/or WABO certified.

Apply SSPC 20 inorganic zinc-rich primer to all field welds made on galvanized surfaces.

BID SET

CAD NO.

NO.	REVISIONS	INT.	APP.	DATE

ACTION	BY	DATE
DESIGNED	ECM	01/03/2025
DRAWN	ECM	01/03/2025
CHECKED		
CHECKED (HDQTS.)		

ERIK CHRISTOPHER MARTIN
STATE OF WASHINGTON
40851
REGISTERED PROFESSIONAL ENGINEER
01/07/2025

SARGENT
SARGENT ENGINEERS, INC.
320 Ronlee Lane NW • Olympia, WA 98502
Tel. 360 867-9284
SEI Pr. No. – A20158.03
PROJECT ENGINEER

WASHINGTON STATE PARKS AND RECREATION COMMISSION

NISQUALLY STATE PARK

PHASE 3A MAINTENANCE BUILDING AND WWTF

MAINTENANCE BUILDING

STRUCTURAL NOTES

S0.1

SCALE
AS SHOWN

PARKS FILE#

Plotted: Jan 07, 2025 – 12:57 ErikM B:\20Files\A20158.03 KMB – Nisqually State Park\Drawings\Ph 3A – Maintenance Addition\NSP – Maint Ph3A Structural.dwg Layout Name: STRUCTURAL NOTES

TABLE OF SPECIAL INSPECTIONS

REQUIRED VERIFICATIONS & INSPECTIONS FOR SOILS

TASK	INSPECTION FREQUENCY		REFERENCED STANDARD	IBC REFERENCE
	CONTINUOUS	PERIODIC		
Verify materials below shallow foundations are adequate to achieve the design bearing capacity.		X		
Verify excavations are extended to proper depth and have reached proper material.		X		
Perform classification and testing of compacted fill materials.		X		
Verify use of proper materials, densities and lift thicknesses during placement and compaction of compacted fill.	X			
Prior to placement of compacted fill, inspect subgrade and verify that site has been properly prepared.		X		

REQUIRED VERIFICATIONS & INSPECTIONS FOR CONCRETE CONSTRUCTION

TASK	INSPECTION FREQUENCY		REFERENCED STANDARD	IBC REFERENCE
	CONTINUOUS	PERIODIC		
Inspect reinforcement, including prestressing tendons, and verify placement.		X	ACI 318: Ch. 20, 25.2, 25.3, 26.6.1-26.6.3	1908.4
Inspect anchors cast in concrete.		X	ACI 318: 17.8.2	
Inspect anchors post-installed in hardened concrete.	X (horiz. or upwardly inclined adhesive anchors)	X (mech. anchors and all other adhesive)	ACI 318: 17.8.2	
Verify use of required design mix.		X	ACI 318: Ch. 19, 26.4.3, 26.4.4	1904.1, 1904.2, 1908.2, 1908.3
Prior to concrete placement, fabricate specimens for strength tests, perform slump and air content tests, and determine temperature of concrete.	X		ASTM C172, ASTM C31, ACI 318: 26.4, 26.12	1908.10
Inspect concrete and shotcrete placement for proper application techniques.	X		ACI 318: 26.5	1908.6, 1908.7, 1908.8
Verify maintenance of specified curing temperature and techniques.		X	ACI 318: 26.5.3-26.5.5	1908.9
Inspect formwork for shape, location and dimensions of the concrete member being formed.		X	ACI 318:26.11.1.2(b)	

REQUIRED VERIFICATIONS & INSPECTIONS FOR STEEL CONSTRUCTION

TASK	INSPECTION FREQUENCY		REFERENCED STANDARD	IBC REFERENCE
	CONTINUOUS	PERIODIC		
1. Material verification of high-strength bolts, nuts and washers:				
a. Identification markings to conform to ASTM standards specified in the approved construction documents.		X	Applicable ASTM material specifications; AISC 360, Section A3.3	
b. Manufacturer's certificate of compliance required.		X		
2. Inspection of high-strength bolting:				
a. Bearing type connections.		X	AISC 360, Section M2.5	1704.3.3
b. Slip-critical connections.	X	X		
3. Material verification of structural steel:				
a. Identification markings to conform to ASTM standards specified in the approved construction documets.			ASTM A 6 or ASTM A 568	1708.4
b. Manufacturer's certified mill test reports.			ASTM A 6 or ASTM A 569	
4. Material verification of weld filler materials:			ASTM A 6 or ASTM A 568	
a. Identification markings to conform to AWS specification in the approved construction documets.			AISC 360, Section A3.5	
b. Manufacturer's certificate of compliance required.				
5. Inspection of welding: a. Structural Steel				
1) Complete and partial penetration groove welds.	X		AWS D1.1	1704.3.1
2) Multipass fillet welds.	X			
3) Single-pass fillet welds > 5/16"	X			
4) Single-pass fillet welds $\leq$ 5/16"		X		
5) Floor and roof deck welds.		X	AWS D1.3	
b. Reinforcing steel:			AWS D1.4 ACI 318: 3.5.2	
1) Verification of weldability of reinforcing steel other than ASTM A 706.		X		
2) Reinforcing steel-resisting flexural and axial forces in intermediate and special moment frames, and boundary elements of special reinforced concrete shear walls and shear reinforcement.	X			
3) Shear reinforcement.	X			
4) Other reinforcing steel.		X		
6. Inspection of steel frame joint details for compliance with approved construction documents:		X		1704.3.2
a. Details such as bracing and stiffening.				
b. Member locations.				
c. Application of joint details at each connection.				

Note: Where applicable, see also Section 1707.1, Special inspection for seismic resistance.

STANDARD ABBREVIATIONS

A.B.	Anchor Bolt		
ALT.	Alternate	NBSEI	Not by SEI
A.F.F.	Above Finish Floor	N.I.C.	Not In Contract
A.C.P.	Asphalt Concrete Paving	N.T.S.	Not To Scale
		NO.	Number
BOTT.	Bottom		
		O.C.	On Center
C.I.P.	Cast-in-Place	O.D.	Outside Diameter
C.M.U.	Concrete Masonry Units		
CONC.	Concrete	C.R.S.I.	Concrete Reinforcing Steel Institute
		PAV.	Paving
		PLF	Pounds Per Lineal Foot
		PSF	Pounds Per Square Foot
		PSI	Pounds Per Square Inch
CONT.	Continuous	PT	Pressure Treated
DBL.	Double		
DIA.	Diameter	R.	Radius or Riser
D.L.	Dead Load		
		SEI	Sargent Engineers Inc.
EA.	Each	SIM.	Similar
EOR	Engineer of Record		
EL., ELEV.	Elevation	T.O.B.	Top Of Beam
E.W.	Each Way	T.O.C.	Top Of Concrete or Top Of Column
F.O.C.	Face of Concrete	T.O.S.	Top Of Steel
F.O.F	Face of Fascia		
F.O.W.	Face of Wall	UNO	Unless Noted Otherwise
FT.	Foot or Feet		
		VERT.	Vertical
HORIZ.	Horizontal		
		WHS	Welded Headed Stud
I.D.	Inside Diameter	WTS	Welded Threaded Stud
		W.W.F.	Welded Wire Fabric
K.	Kips	w/	With
LBS.	Pounds		
LF	Linear Foot (Feet)	STANDARD SYMBOLS	
LL	Live Load	@	At
LP	Low Point	℄	Centerline
LLH	Long Leg Horizontal	ϕ	Diameter
LLV	Long Leg Vertical	#	Number
MAX.	Maximum		
MFR.	Manufacturer		
MIN.	Minimum		
MISC.	Miscellaneous		

BID SET

SHEET 74 OF 226

CAD NO.

	DATE	APP.	INT.	REVISIONS	NO.

ACTION	BY	DATE
DESIGNED	ECM	01/03/2025
DRAWN	ECM	01/03/2025
CHECKED		
CHECKED (HDQTS.)		

ERIK CHRISTOPHER MARTIN
STATE OF WASHINGTON
40851
STRUCTURAL ENGINEER
PROFESSIONAL ENGINEER
01/07/2025

SARGENT
SARGENT ENGINEERS, INC.
320 Ronlee Lane NW • Olympia, WA 98502
Tel. 360 867-9284
SEI Pr. No. – A20158.03
PROJECT ENGINEER

WASHINGTON STATE PARKS AND RECREATION COMMISSION

NISQUALLY STATE PARK

PHASE 3A MAINTENANCE BUILDING AND WWTF

MAINTENANCE BUILDING
SPECIAL INSPECTIONS & SCHEDULES

S0.2

SCALE
AS SHOWN

PARKS FILE#

Plotted: Jan 07, 2025 – 12:57 ErikM B:\20Files\A20158.03 KMB – Nisqually State Park\Drawings\Ph 3A – Maintenance Addition\NSP – Maint Ph3A Structural.dwg Layout Name: SPECIAL INSPECTIONS & SCHEDULES

FOOTING SCHEDULE		
MARK	SIZE	REINFORCING
F3	3'x3'x0'-10"	(4) #4 EA. WAY BOTTOM
F84	8'x4'x1'-6"	#6 @ 10" MAX. O.C. EA. WAY TOP AND BOTTOM
F5	5'x5'x1'-6"	(6) #6 EA. WAY TOP AND BOTTOM (1)
F8	8'x8'x1'-6"	(9) #6 EA. WAY TOP AND BOTTOM

COLUMN SCHEDULE	
MARK	SIZE
M1	HSS6x6x3/8

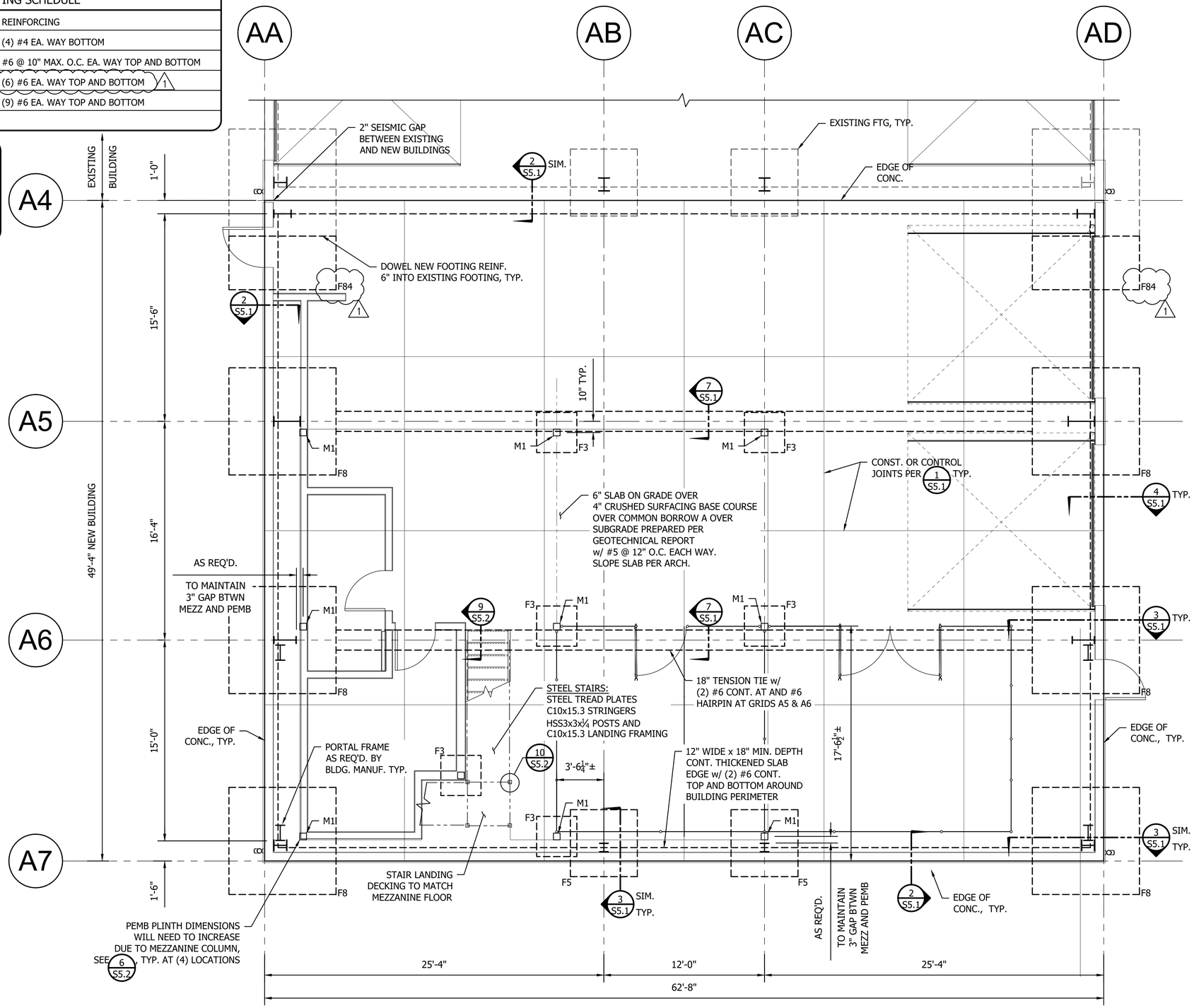

A - BUILDING FOUNDATION

4' 0 8'

SHEET 75 OF 226

BID SET

CAD NO.

NO.	REVISIONS	INT.	APP.	DATE
1	Building Review Comments	ECM	-	07/17/24

ACTION	BY	DATE
DESIGNED	ECM	01/03/2025
DRAWN	ECM	01/03/2025
CHECKED		
CHECKED (HDQTS.)		

ERIK CHRISTOPHER MARTIN STATE OF WASHINGTON 40851 STRUCTURAL ENGINEER PROFESSIONAL ENGINEER
01/07/2025

SARGENT
SARGENT ENGINEERS, INC.
320 Ronlee Lane NW • Olympia, WA 98502
Tel. 360 867-9284

SEI Pr. No. – A20158.03
PROJECT ENGINEER

WASHINGTON STATE PARKS AND RECREATION COMMISSION

NISQUALLY STATE PARK

PHASE 3A MAINTENANCE BUILDING AND WWTF

MAINTENANCE BUILDING

FOUNDATION PLAN

S1.1

SCALE
AS SHOWN

PARKS FILE#

Plotted: Jan 07, 2025 – 12:57 ErikM B:\20Files\A20158.03 KMB – Nisqually State Park\Drawings\Ph 3A – Maintenance Addition\NSP – Maint Ph3A Structural.dwg Layout Name: FOUNDATION PLAN

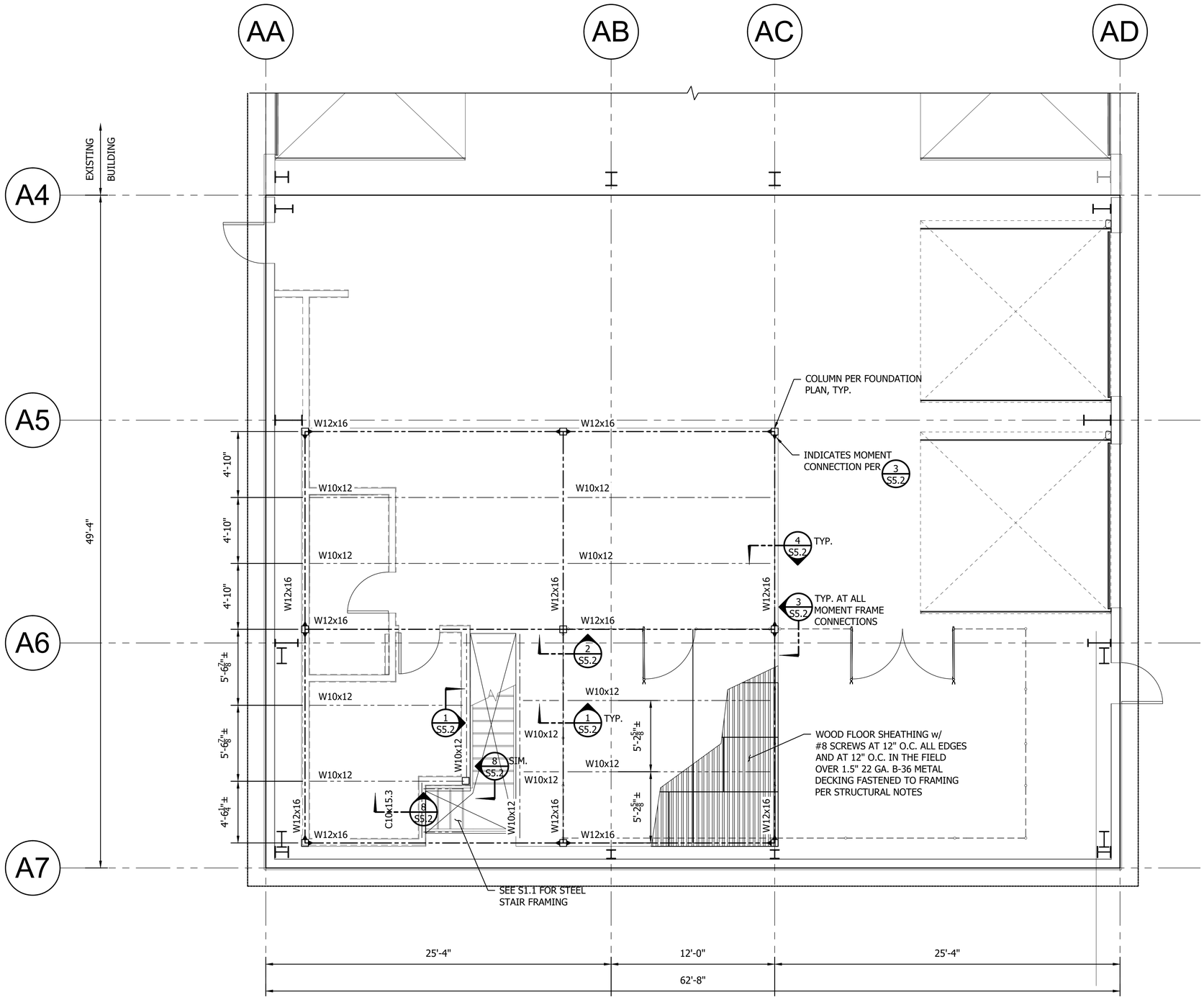

B/- MEZZANINE FRAMING PLAN

0 4' 8'

SHEET 76 OF 226

BID SET

CAD NO.

NO.	REVISIONS	INT.	APP.	DATE

ACTION	BY	DATE
DESIGNED	ECM	01/03/2025
DRAWN	ECM	01/03/2025
CHECKED		
CHECKED (HDQTS.)		

ERIK CHRISTOPHER MARTIN
STATE OF WASHINGTON
40851
STRUCTURAL ENGINEER
PROFESSIONAL ENGINEER
01/07/2025

SARGENT
SARGENT ENGINEERS, INC.
320 Ronlee Lane NW • Olympia, WA 98502
Tel. 360 867-9284
SEI Pr. No. – A20158.03
PROJECT ENGINEER

WASHINGTON STATE PARKS AND RECREATION COMMISSION

NISQUALLY STATE PARK

PHASE 3A MAINTENANCE BUILDING AND WWTF

MAINTENANCE BUILDING

MEZZANINE PLAN

S1.2

SCALE
AS SHOWN

PARKS FILE#

Plotted: Jan 07, 2025 – 12:57 ErikM B:\20Files\A20158.03 KMB – Nisqually State Park\Drawings\Ph 3A – Maintenance Addition\NSP – Maint Ph3A Structural.dwg Layout Name: MEZZANINE PLAN

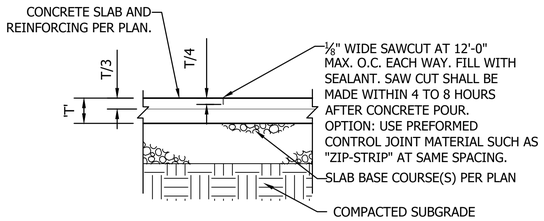

1A - DETAIL: CONTROL JOINT

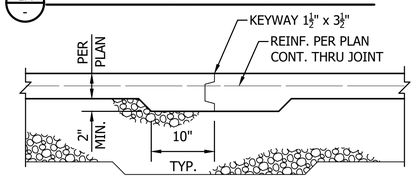

1B - DETAIL: CONSTRUCTION JOINT

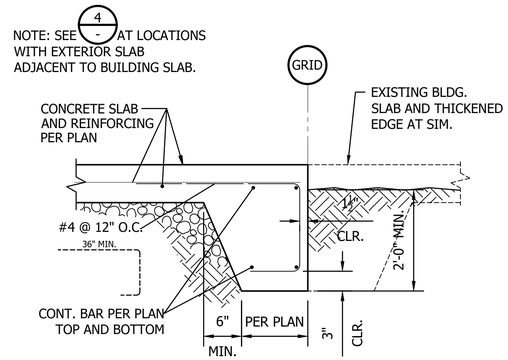

2/- DETAIL: THICKENED SLAB EDGE

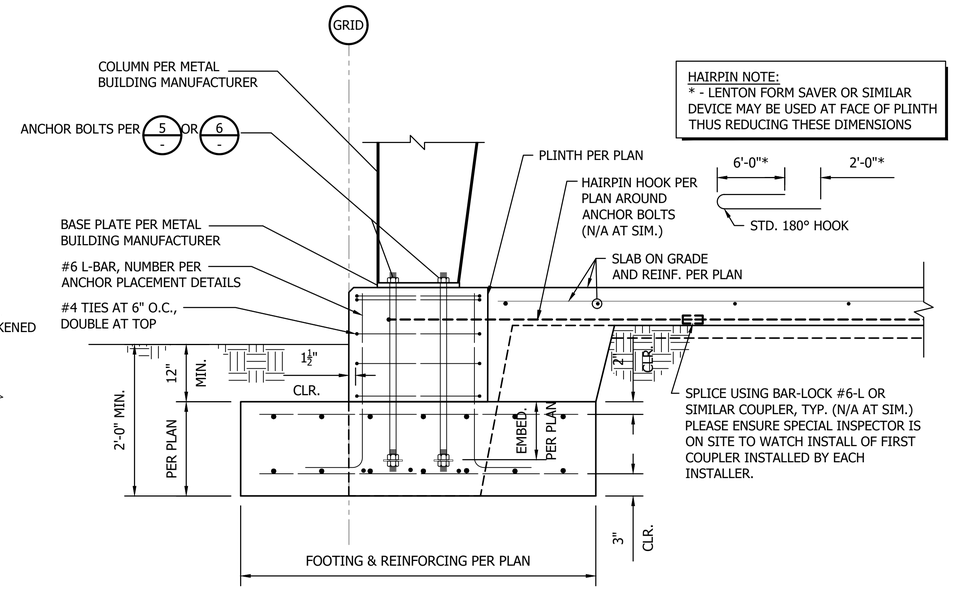

HAIRPIN NOTE:
* - LENTON FORM SAVER OR SIMILAR DEVICE MAY BE USED AT FACE OF PLINTH THUS REDUCING THESE DIMENSIONS

3/- DETAIL: COLUMN FOOTING WITH PLINTH

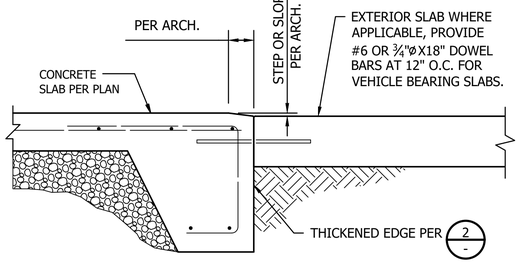

NOTE: VERIFY DOOR OPENING SIZE & LOCATION W/ ARCH.

4/- DETAIL: EXTERIOR SLAB AT THICKENED EDGE

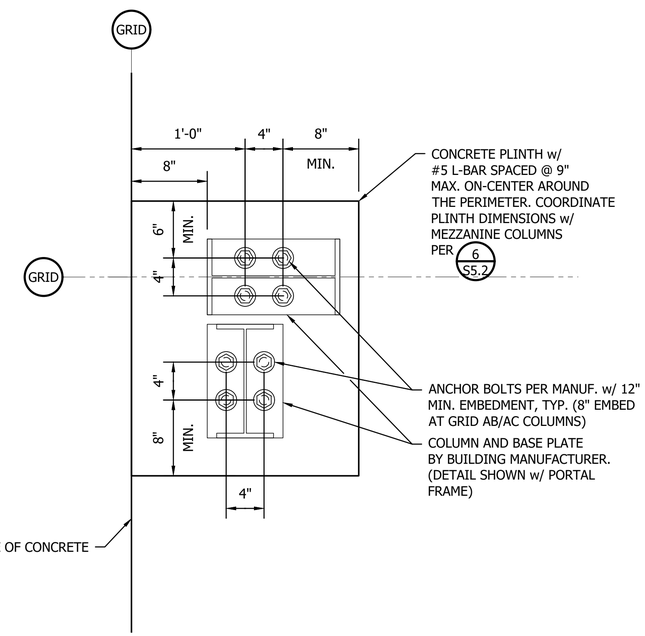

5/- DETAIL: ANCHOR BOLT PLACEMENT AT TYPICAL INTERIOR FRAMES

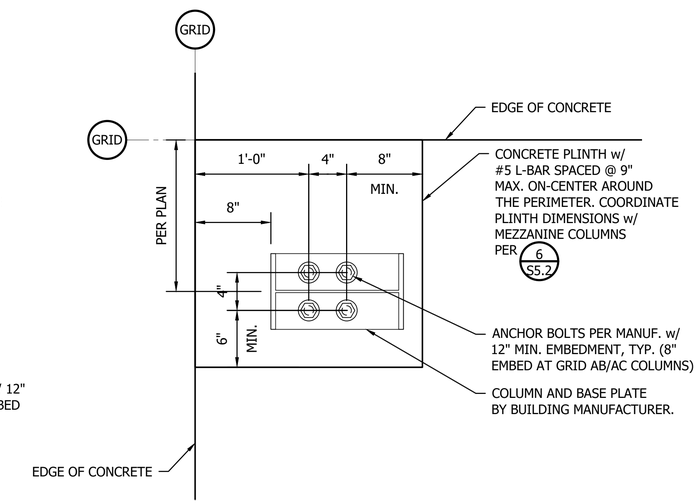

6/- DETAIL: ANCHOR BOLT PLACEMENT AT TYPICAL CORNER FRAMES

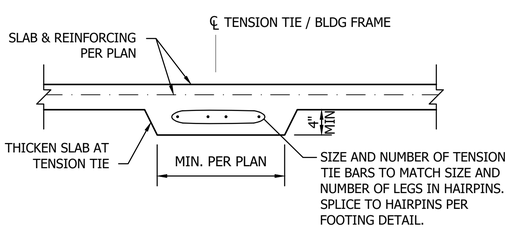

7/- DETAIL: TENSION TIE

BID SET

SHEET 77 OF 226

CAD NO.

NO.	REVISIONS	INT.	APP.	DATE

ACTION	BY	DATE
DESIGNED	ECM	01/03/2025
DRAWN	ECM	01/03/2025
CHECKED		
CHECKED (HDQTS.)		

ERIK CHRISTOPHER MARTIN — STATE OF WASHINGTON — 40851 — PROFESSIONAL ENGINEER
01/07/2025

SARGENT
SARGENT ENGINEERS, INC.
320 Ronlee Lane NW • Olympia, WA 98502
Tel. 360 867-9284
SEI Pr. No. – A20158.03
PROJECT ENGINEER

WASHINGTON STATE PARKS AND RECREATION COMMISSION

NISQUALLY STATE PARK

PHASE 3A MAINTENANCE BUILDING AND WWTF

MAINTENANCE BUILDING

FOUNDATION DETAILS

S5.1

SCALE
AS SHOWN

PARKS FILE#

Plotted: Jan 07, 2025 – 12:57 ErikM B:\20Files\A20158.03 KMB – Nisqually State Park\Drawings\Ph 3A – Maintenance Addition\NSP – Maint Ph3A Structural.dwg Layout Name: FOUNDATION DETAILS

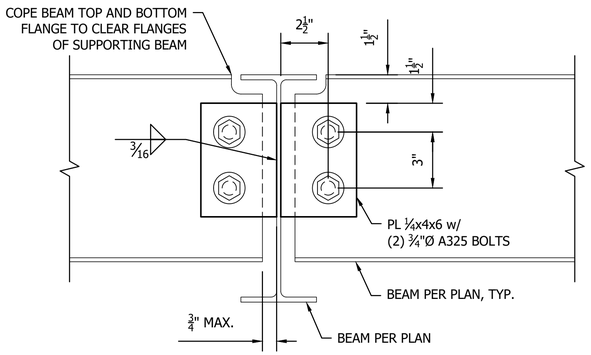

1 - DETAIL: BEAM TO BEAM CONNECTION

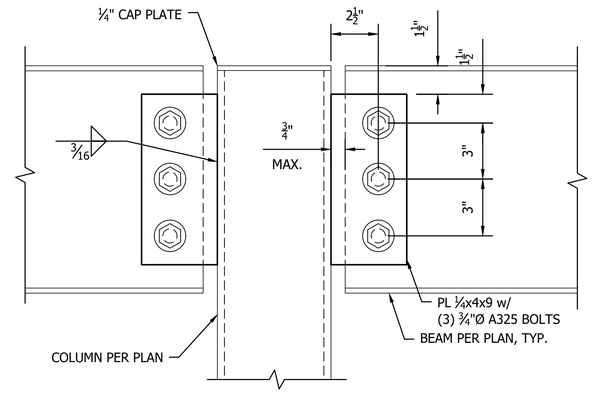

2 - DETAIL: BEAM TO COLUMN CONNECTION

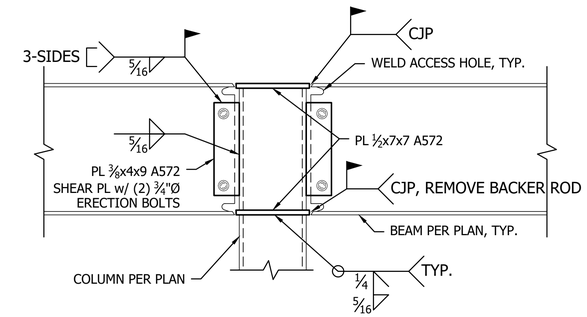

3 - DETAIL: MOMENT FRAME JOINTS

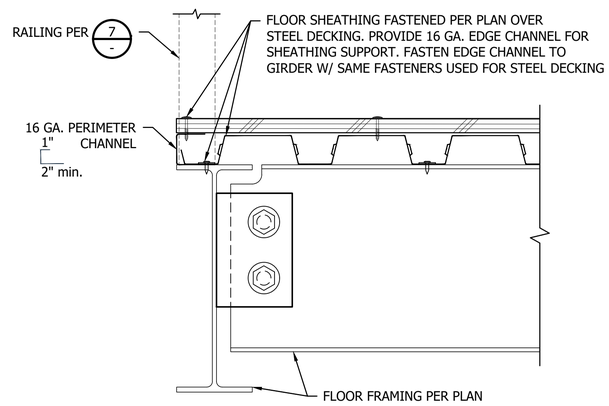

4 - DETAIL: TYP. EDGE OF DECK

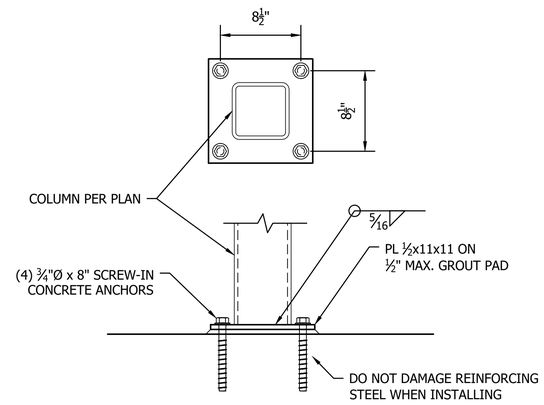

5 - DETAIL: MEZZ. COLUMN BASE PLATE

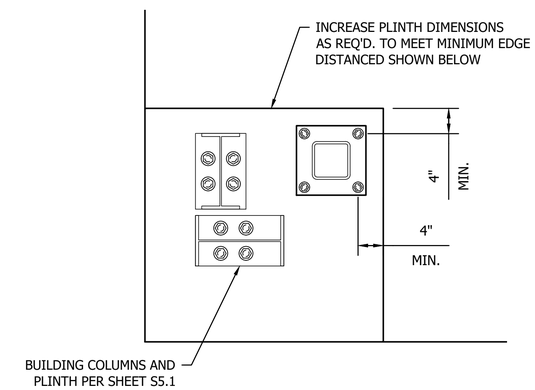

6 - DETAIL: PLINTH MOD. AT MEZZ. COLUMNS

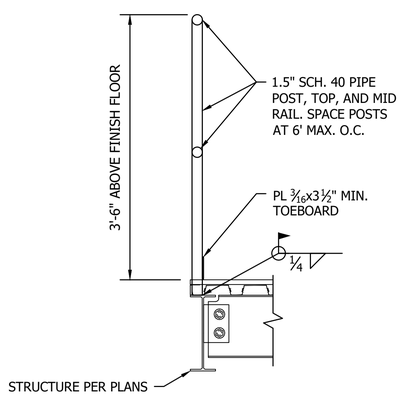

7 - DETAIL: TYP. RAILING

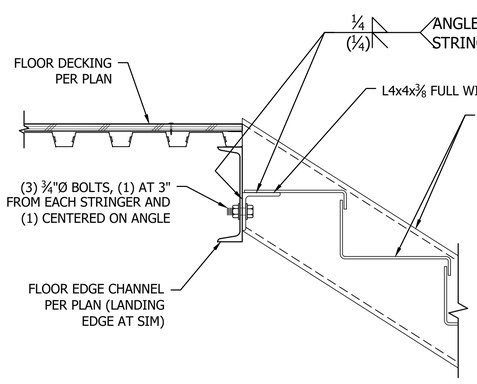

8 - DETAIL: STAIR TO FLOOR CONNECTION

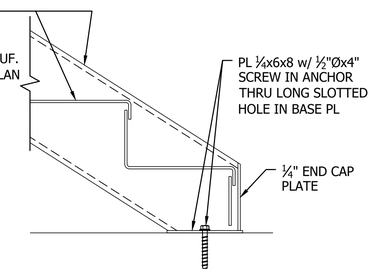

9 - DETAIL: STAIR TO SLAB

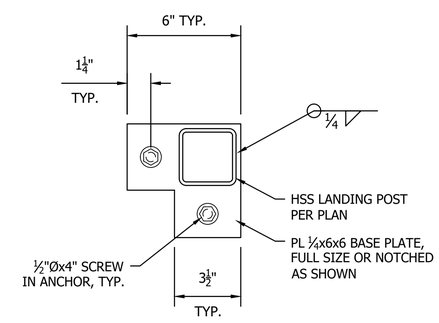

10 - DETAIL: STAIR LANDING BASE

BID SET

CAD NO.

REVISIONS	DATE	APP.	INT.

ACTION	BY	DATE
DESIGNED	ECM	01/03/2025
DRAWN	ECM	01/03/2025
CHECKED		
CHECKED (HDQTS.)		

ERIK CHRISTOPHER MARTIN STATE OF WASHINGTON 40851 STRUCTURAL ENGINEER PROFESSIONAL ENGINEER
01/07/2025

SARGENT
SARGENT ENGINEERS, INC.
320 Ronlee Lane NW • Olympia, WA 98502
Tel. 360 867-9284
SEI Pr. No. – A20158.03
PROJECT ENGINEER

WASHINGTON STATE PARKS AND RECREATION COMMISSION

NISQUALLY STATE PARK

PHASE 3A MAINTENANCE BUILDING AND WWTF

MAINTENANCE BUILDING

MEZZANINE DETAILS

S5.2

SCALE
AS SHOWN

PARKS FILE#

Plotted: Jan 07, 2025 – 12:57 ErikM B:\20Files\A20158.03 KMB – Nisqually State Park\Drawings\Ph 3A – Maintenance Addition\NSP – Maint Ph3A Structural.dwg Layout Name: MEZZANINE DETAILS

STRUCTURAL NOTES

GENERAL NOTES

These general notes are to be used as a supplement to the specifications and apply to all structural components of the building and foundation. Any discrepancies found among the drawings, the specifications, these general notes and the site conditions shall be reported to the Registered Design Professional, who shall correct such discrepancy in writing. Any work done by the Contractor after discovery of such discrepancy, but prior to correction of such discrepancy, shall be done at the Contractor's risk. The Contractor is responsible for conforming to all OSHA and WISHA safety standards. The Contractor is responsible for all bracing and shoring during construction.

CODES

All methods, materials, and workmanship shall conform to the 2018 International Building Code (IBC) as amended and adopted by the local building authority. All reference to other Codes and Standards (ACI, ASTM, etc.) shall be for the latest or most current edition available, except as designated by the governing code.

SECTIONS AND DETAILS

Sections and details showing reinforcing, bolts, framing members, and connections are intended to illustrate specific details. No attempt has been made to show all elements passing through a specific section or detail. Construction details not specifically shown on the drawings shall follow similar details of this project, as approved by the Registered Design Professional.

COORDINATION

The Contractor shall verify and/or coordinate all dimensions and conditions shown on the contract documents. Refer to Architectural, Mechanical and Electrical drawings for all dimensions not shown, for size and position of openings, breaks in structural members due to architectural treatment, location of sumps, etc. t.

DESIGN CRITERIA

Structural design has been performed per the structural provisions of the International Building Code, 2018 edition.

Dead Loads:

Roof: Dr = 20 PSF (12 PSF truss bottom chord, 8 PSF truss top chord)

Live Loads:

Snow: P_g = 35 PSF, P_f = 30.0 PSF, P_s = 30.0 PSF, C_e = 1.2, I_s = 1.0, C_t = 1.0, C_s = 1.0. For unbalanced snow loading, use 35 PSF on leeward roof and 0 PSF on windward roof.
Wind: V = 100 MPH, Exposure B, K_e = 1.0, GC_{pi} = 0.18
Seismic: I_E=1.0, S_s = 1.19g, S_1 = 0.42g, Site Class D, S_{DS} = 0.81g, S_{D1} = 0.798g, Risk Category II, Special Reinforced Masonry Shear Walls, Base Shear V = 9.3 kips, C_s = 0.163, R = 5.0, Equivalent Lateral Force Procedure

SOIL CLASSIFICATION & BEARING

Recommendations made in the GeoEngineers Geotechnical Report dated 12/22/2020 were used for the design of the structure.

Allowable soil pressure: 3000 psf (with allowable ⅓ increase for wind/seismic loading)

SHOP DRAWINGS

Dimensions and quantities are the responsibility of the Contractor, despite review by the Registered Design Professional. Submit shop drawings to the Design Professional for the following, prior to any fabrication or construction:

- Reinforcing steel.
- Structural and miscellaneous steel including welds, welded studs and anchors.
- Pre-engineered wood joists and trusses.

CONSTRUCTION INSPECTION

The Building Official shall make structural inspections as required by the local jurisdiction. Construction inspection shall be in accordance with the following provisions of the 2018 IBC:

Section 104.4 Inspections
Section 110 Inspections
Chapter 17 Structural Tests & Special Inspections

CONSTRUCTION INSPECTION (cont.)

The Special Inspector shall be hired by the Owner to provide special inspection as indicated in the attached "Table of Special Inspections." The Special Inspector shall submit a summary of the proposed testing program for review and approval. Submit all inspection reports directly to the Building Official, Owner and/or Registered Design Professional within two (2) days after each inspection. Any discrepancies shall be brought to the Contractor's immediate attention, and if not corrected, to the Building Official and Registered Design Professional.

STRUCTURAL TESTS

Structural testing shall be in accordance with the following provisions of the 2018 IBC:

Chapter 17 Structural Tests & Special Inspections Structural Reinforced Masonry:

- Engineered masonry in nonessential facilities shall have Certificates of Compliance and f'm verified prior to construction. NO grout cube or prism testing required.

CONSTRUCTION OBSERVATION

Construction observation by the Registered Design Professional is for general conformance only and does not relieve the Contractor from any responsibility. The Design Professional shall be notified 48 hours prior to all concrete pours.

STRUCTURAL CONCRETE GENERAL

All concrete shall meet the requirements of ACI-301, "Specifications For Structural Concrete For Buildings." Proportioning of ingredients for each concrete mix shall be by Method 2 or the alternate procedure given in ACI-301. Place concrete per ACI-304 and conform to ACI-604 (306) for cold weather placement and ACI-605 (305) for hot weather placement. Concrete shall be placed monolithically between construction or control joints. Protect all concrete from premature drying, excessive hot or cold temperature for seven days after placing.

MATERIALS

Cement: ASTM C150, Type I.
Coarse and fine aggregate: ASTM C33.
Water shall be clean and potable.

ADMIXTURES

Water reducing admixture: ASTM C494. Admixtures shall be used in exact accordance with manufacturer's instructions.

Synergized performance systems: admixtures to produce flowable concrete may be used subject to Registered Design Professional's approval.

Air entrainment: ASTM C260, Entrain 5% ± 1% by volume in all exposed concrete.

No other admixture is permitted unless approved by the Registered Design Professional.

STRENGTH

Twenty-eight day compressive strength shall be:
Footings and stem walls: 4000 psi 28-day, 4500 psi 56-day.
Slab on grade: 3000 psi 28-day
Slump: 5" ± 1 inch.
Maximum Water/cement ratio: 0.46

REINFORCING STEEL

Reinforcing steel shall conform to ASTM A615 or A706 Grade 60 (except No.3 stirrups may be grade 40), new billet stock, and securely tied with #16 double annealed wire. Welded Wire Fabric shall conform to ASTM 1064. Reinforcement shall be detailed in accordance with ACI 315. Reinforcement shall be placed in accordance with CRSI "Recommended Practice For Placing Reinforcing Bars".

CONCRETE COVER

The following concrete cover shall be provided for reinforcement:
- Concrete cast against and permanently exposed to earth: 3"
- Concrete exposed to earth or weather:
  No.6 to No.18 bars: 2"
  No.5 bars, W31 or D31, and smaller: 1 1/2"
- Concrete not exposed to earth or weather:
  No.14 and No.18 bars: 1 1/2"
  No.11 bars and smaller: 3/4"

CONSTRUCTION OR CONTROL JOINTS

Construction or control joint spacing in slabs shall not exceed 12'-6" on center except as directed by the Registered Design Professional.

FORMWORK AND SHORING

Follow recommended practice for concrete formwork (ACI-347). All shoring shall be the responsibility of the Contractor. Formwork supports and shoring shall be designed to provide finished concrete surfaces at all faces level, plumb, and true to the dimensions and elevations shown. Tolerances and variations shall be as specified.

FLOOR FLATNESS AND LEVELNESS

The Flatness and Levelness of the floor shall be measured per ASTM E 1155: Standard Test Method for Determining Floor Flatness and Levelness Using the F-Number System.

Specified Overall F-Number: FF = 20, FL = 15
Minimum Local F-Number: FF = 15, FL = 10

SHRINK COMPENSATING GROUT

F'c = 7,000 psi minimum in 28 days. Fill up or pack entire space under plates or in joints avoiding air pockets.

CONCRETE MASONRY UNITS

CMU walls shall be constructed in accordance with the IBC. Use type "M" or "S" mortar unless noted otherwise. Reinforce walls with (2) No.4's at 4'-0" o.c. horizontal and (1) No.5 at 4'-0" o.c. vertical, unless otherwise shown on drawings or schedules. Lifts shall not exceed 4'-0" (pours shall not exceed 12' and require pre-approval by the EOR). At CMU wall openings over 12" wide, provide (2) No.4's horizontal above and below openings and (2) No.5's vertical each side of the opening. Grout all reinforced cells full.

All vertical reinforcing shall be anchored into footings at base of wall and bond beam at top of wall with dowels using a 90-degree or 135-degree bend.

See 'CMU Lap Splice Length' Table for typical lap requirements for bars in CMU.

Material requirements (28 day compressive strength):

f`m	2000 PSI
CMU	2000 PSI - Type I, normal weight
Mortar	Type "M" or "S" by proportion
Grout	2500 PSI

CONCRETE ANCHORS, INSERTS and EMBEDDED ITEMS

Concrete anchor bolts shall meet the quality of ASTM F1554 grade 36 bolts and shall have a standard bolt head or an equal deformity in the embedded portion. Galvanize anchor bolts in contact with pressure treated lumber per ASTM A153, Class C.

Electrical conduit in slabs shall be placed at the mid-depth of the slab at a minimum spacing of three times the conduit diameter. Conduit outside diameter shall not exceed one-third of the slab thickness.

"Wet setting" of any item shown inserted, or embedded in concrete is not allowed without prior approval of the Registered Design Professional.

POST INSTALLED CONCRETE AND MASONRY ANCHORS

Post installed anchors in concrete and masonry shall be as manufactured by Simpson Strong-Tie, Hilti, Dewalt, or as approved by Engineer of Record. Anchors shall be Code tested and approved for use in cracked concrete with approval for use in resisting seismic loads.

Threaded rods, bolts or reinforcing bars shown doweling into existing concrete shall use Hilti HIT-HY200 or HIT-RE 500 V3, Simpson AT-XP or SET-XP, Dewalt AC100+ Gold or Pure110+, or approved equal. Threaded rods, bolts or reinforcing bars shown doweling into existing CMU shall use Hilti HIT-HY270, Simpson AT-XP or SET-XP, Dewalt AC100+ Gold, or approved equal. Provide screen tubes at ungrouted CMU. The Contractor shall comply with the manufacturer's recommendations for all installation requirements including: drill bit size, embedment depth, hole cleaning, adhesive application, and special inspection requirements.

FOUNDATION NOTES

Bottom of exterior foundations shall be placed a minimum of 24" below finished grade. Backfill shall be placed and compacted in a manner that does not damage the foundation. Dowel all interior foundation walls and continuous footing steel into perimeter footings with elbow bars. Use 24" x 24" elbow bars of matching size at all bent horizontal steel.

WOOD FRAMING, LUMBER GRADING

Lumber Grading shall be in accordance with standard grading rules of West Coast Lumber No. 17. Moisture content shall be maximum 19%. Framing lumber shall be Douglas Fir-Larch #2 unless noted otherwise. Framing in contact with concrete or within 8" of earth shall be pressure treated.

Sheathing shall be APA rated with nominal thickness as shown on drawings.

Use hot dipped galvanized (ASTM A153) nails for all connections to pressure treated wood.

Wood framing details not shown otherwise shall be constructed to the minimum standards of the IBC and shall conform to Table 2304.10.1.

Notations on drawings relating to framing clips, joist hanger and other connecting devices refer to catalog numbers manufactured by Simpson Strong Tie Company, San Leandro CA. Install hardware with all manufacturer specified fasteners, unless otherwise noted. All Simpson Hangers used in exterior applications or in contact with pressure treated wood shall be provided with "Z-Max" galvanizing, when available, or shall be hot dipped galvanized. Hot dipped galvanized nails and bolts (ASTM 153) shall be provided for all galvanized Simpson connectors used in all exterior applications and/or attached to pressure treated lumber. Equivalent devices by other manufacturers may be substituted provided they have ICC approval for equal load capacity.

PRESSURE TREATED WOOD

All lumber and plywood required to be preservative treated shall be treated in accordance with IBC Section 2303.1.9. Each piece of treated lumber and plywood shall bear the quality mark of an approved inspection agency which maintains continuing supervision, testing and inspection over the quality of the product, as described in the IBC Standards, and shall be identified as required by these standards. Where pressure treated lumber is cut or drilled after treatment, the cut surface shall be field treated with approved preservatives by repeated brushing, dipping or soaking until the wood absorbs no more preservative.

Per Section 2304.10.5, all fasteners in contact with preservative treated wood shall be hot dipped galvanized or stainless steel. This includes anchor bolts, nails, washers, nuts, and shear wall and sheathing nailing.

STANDARD ABBREVIATIONS

A.B.	Anchor Bolt
ALT.	Alternate
A.F.F.	Above Finish Floor
A.C.P.	Asphalt Concrete Paving
BOTT.	Bottom
C.I.P.	Cast-in-Place
C.M.U.	Concrete Masonry Units
CONC.	Concrete
C.R.S.I.	Concrete Reinforcing Steel Institute
CONT.	Continuous
DBL.	Double
DIA.	Diameter
D.L.	Dead Load
EA.	Each
EOR	Engineer of Record
EL., ELEV.	Elevation
E.W.	Each Way
F.O.C.	Face of Concrete
F.O.F	Face of Fascia
F.O.W.	Face of Wall
FT.	Foot or Feet
HORIZ.	Horizontal
I.D.	Inside Diameter
K.	Kips
LBS.	Pounds
LF	Linear Foot (Feet)
LL	Live Load
LP	Low Point
LLH	Long Leg Horizontal
LLV	Long Leg Vertical
MAX.	Maximum
MFR.	Manufacturer
MIN.	Minimum
MISC.	Miscellaneous
NBSEI	Not by SEI
N.I.C.	Not In Contract
N.T.S.	Not To Scale
NO.	Number
O.C.	On Center
O.D.	Outside Diameter
PAV.	Paving
PLF	Pounds Per Lineal Foot
PSF	Pounds Per Square Foot
PSI	Pounds Per Square Inch
PT	Pressure Treated
R.	Radius or Riser
SEI	Sargent Engineers Inc.
SIM.	Similar
T.O.B.	Top Of Beam
T.O.C.	Top Of Concrete or Top Of Column
T.O.S.	Top Of Steel
UNO	Unless Noted Otherwise
VERT.	Vertical
WHS	Welded Headed Stud
WTS	Welded Threaded Stud
W.W.F.	Welded Wire Fabric
w/	With

STANDARD SYMBOLS

@	At
℄	Centerline
ø	Diameter
#	Number

BID SET

CAD NO.

NO.	REVISIONS	INT.	APP.	DATE

ACTION	BY	DATE
DESIGNED	ECM	01/03/2025
DRAWN	ECM	01/03/2025
CHECKED		
CHECKED (HDQTS.)		

ERIK CHRISTOPHER MARTIN
STATE OF WASHINGTON
40851
STRUCTURAL ENGINEER
PROFESSIONAL ENGINEER
01/07/2025

SARGENT
SARGENT ENGINEERS, INC.
320 Roniee Lane NW • Olympia, WA 98502
Tel. 360 867-9284 • Fax 360 867-9318
SEI Pr. No. – A20158.03
PROJECT ENGINEER

WASHINGTON STATE PARKS AND RECREATION COMMISSION

NISQUALLY STATE PARK

PHASE 3A MAINTENANCE BUILDING AND WWTF

PUMP HOUSE

STRUCTURAL NOTES
S1.0

SCALE
N/A

PARKS FILE#

Plotted: Jan 07, 2025 – 12:57 ErikM B:\20Files\A20158.03 KMB – Nisqually State Park\Drawings\Ph 3A – Pump House\Pump House Bid Review.dwg Layout Name: S1.0

TABLE OF SPECIAL INSPECTIONS

REQUIRED VERIFICATIONS & INSPECTIONS FOR SOILS

TASK	INSPECTION FREQUENCY		REFERENCED STANDARD	IBC REFERENCE
	CONTINUOUS	PERIODIC		
Verify materials below shallow foundations are adequate to achieve the design bearing capacity.		X		
Verify excavations are extended to proper depth and have reached proper material.		X		
Perform classification and testing of compacted fill materials.		X		
Verify use of proper materials, densities and lift thicknesses during placement and compaction of compacted fill.	X			
Prior to placement of compacted fill, inspect subgrade and verify that site has been properly prepared.		X		

REQUIRED VERIFICATIONS & INSPECTIONS FOR CONCRETE CONSTRUCTION

TASK	INSPECTION FREQUENCY		REFERENCED STANDARD	IBC REFERENCE
	CONTINUOUS	PERIODIC		
Inspect reinforcement, including prestressing tendons, and verify placement.		X	ACI 318: Ch. 20, 25.2, 25.3, 26.6.1-26.6.3	1908.4
Inspect anchors cast in concrete.		X	ACI 318: 17.8.2	
Inspect anchors post-installed in hardened concrete.	X (horiz. or upwardly inclined adhesive anchors)	X (mech. anchors and all other adhesive)	ACI 318: 17.8.2	
Verify use of required design mix.		X	ACI 318: Ch. 19, 26.4.3, 26.4.4	1904.1, 1904.2, 1908.2, 1908.3
Prior to concrete placement, fabricate specimens for strength tests, perform slump and air content tests, and determine temperature of concrete.	X		ASTM C172, ASTM C31, ACI 318: 26.4, 26.12	1908.10
Inspect concrete and shotcrete placement for proper application techniques.	X		ACI 318: 26.5	1908.6, 1908.7, 1908.8
Verify maintenance of specified curing temperature and techniques.		X	ACI 318: 26.5.3-26.5.5	1908.9
Inspect formwork for shape, location and dimensions of the concrete member being formed.		X	ACI 318:26.11.1.2(b)	

REQUIRED VERIFICATIONS & INSPECTIONS FOR MASONRY CONSTRUCTION

TASK	INSPECTION FREQUENCY		REFERENCED STANDARD	IBC REFERENCE
	CONTINUOUS	PERIODIC		
Verify compliance with approved submittals.		X	ACI 530.1: Art. 1.5	
Verify the following are in compliance:				
a. Proportions of site-mixed mortar and grout.		X	ACI 530.1: Art 2.1, 2.6A, 2.6B, 2.6C, 2.4G.1.b	
b. Grade, type, and size of reinforcement and anchor bolts.		X	ACI 530: Sect. 6.1, ACI 530.1: Art. 2.4, 3.4	
c. Placement of masonry units and construction of mortar joints.		X	ACI 530.1: Art. 3.3B	
d. Placement of reinforcement and connectors.	X		ACI 530: Sect. 6.1, 6.2.1, 6.2.6, 6.2.7, ACI 530.1: Art. 3.2E, 3.4, 3.6A	
e. Grout space prior to grouting.	X		ACI 530.1: Art. 3.2D, 3.2F	
f. Placement of grout.	X		ACI 530.1: Art. 3.5, 3.6C	
g. Size and location of structural elements.		X	ACI 530.1: Art. 3.3F	
h. Type, size, and location of anchors including other details of anchorage of masonry to structural members, frames, or other construction.	X		ACI 530: Sect. 1.2.1(e), 6.1.4.3, 6.2.1	
i. Welding of reinforcement.	X		ACI 530: Sect. 8.1.6.7.2, 9.3.3.4(c), 11.3.3.4(b)	
j. Preparation, construction, and protection of masonry during cold or hot weather.		X	ACI 530.1: Art. 1.8C, 1.8D	

CMU LAP SPLICE LENGTH (inches)

Bar Size	Bar in center of: 6-in. CMU	8-in. CMU	Bar with edge distance: 1.5-in.	2-in.
#3	16	16	19	16
#4	21	21	34	26
#5	32	26	53	40
#6	61	43	99	74
#7	NP	60	134	101
#8	NP	92	202	152

NP = Not Permitted for this wall.

REBAR LAP SPLICE LENGTH (inches)

BAR SIZE	BOTTOM BAR*	TOP BAR*
#4	18	24
#5	24	30
#6	28	36
#7	41	53
#8	47	60
#9	60	78
#10	71	93

* - Top bar if more than 12" of fresh concrete cast below the bar.
Bottom bar otherwise (including vertical bars)

BID SET

CAD NO.

NO.	REVISIONS	INT.	APP.	DATE

ACTION	BY	DATE
DESIGNED	ECM	01/03/2025
DRAWN	ECM	01/03/2025
CHECKED		
CHECKED (HDQTS.)		

ERIK CHRISTOPHER MARTIN
STATE OF WASHINGTON
40851
STRUCTURAL ENGINEER
PROFESSIONAL ENGINEER
01/07/2025

SARGENT
SARGENT ENGINEERS, INC.
320 Roniee Lane NW • Olympia, WA 98502
Tel. 360 867-9284 • Fax 360 867-9318
SEI Pr. No. – A20158.03
PROJECT ENGINEER

WASHINGTON STATE PARKS AND RECREATION COMMISSION

NISQUALLY STATE PARK

PHASE 3A MAINTENANCE BUILDING AND WWTF

PUMP HOUSE SPECIAL INSPECTIONS & TABLES

S1.1

SCALE
N/A

PARKS FILE#

Plotted: Jan 07, 2025 – 12:57 ErikM B:\20Files\A20158.03 KMB – Nisqually State Park\Drawings\Ph 3A – Pump House\Pump House Bid Review.dwg Layout Name: S1.1

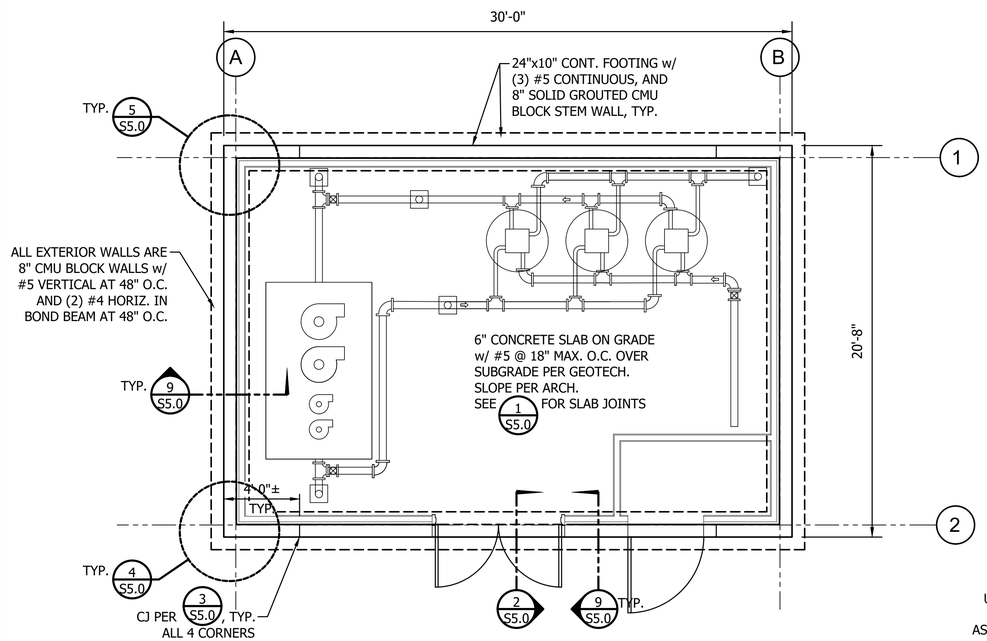

A - BUILDING FOUNDATION PLAN

4' 0 8'

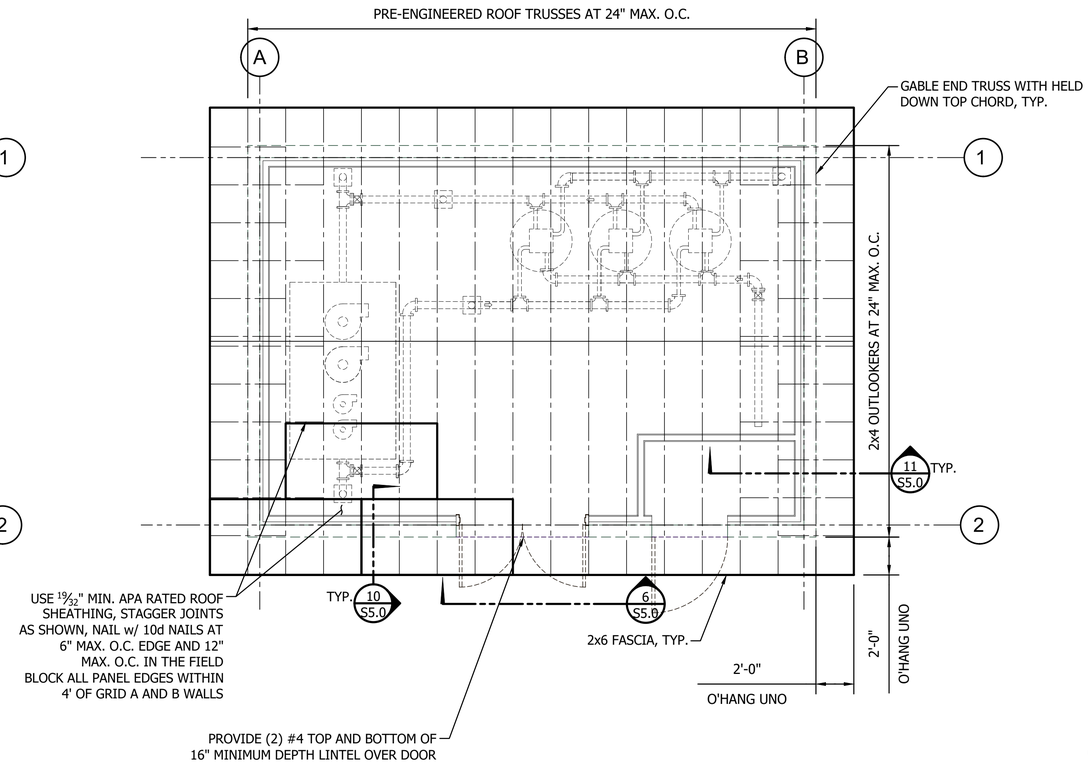

B - BUILDING ROOF FRAMING PLAN

4' 0 8'

BID SET

SHEET 81 OF 226

CAD NO.

NO.	REVISIONS	INT.	APP.	DATE

ACTION	BY	DATE
DESIGNED	ECM	01/03/2025
DRAWN	ECM	01/03/2025
CHECKED		
CHECKED (HDQTS.)		

ERIK CHRISTOPHER MARTIN
STATE OF WASHINGTON
40851
STRUCTURAL ENGINEER
PROFESSIONAL ENGINEER
01/07/2025

SARGENT
SARGENT ENGINEERS, INC.
320 Ronlee Lane NW • Olympia, WA 98502
Tel. 360 867-9284 • Fax 360 867-9318
SEI Pr. No. - A20158.03
PROJECT ENGINEER

WASHINGTON STATE PARKS AND RECREATION COMMISSION

NISQUALLY STATE PARK

PHASE 3A MAINTENANCE BUILDING AND WWTF

PUMP HOUSE FOUNDATION AND ROOF FRAMING PLANS S2.1

SCALE
AS SHOWN

PARKS FILE#

Plotted: Jan 07, 2025 - 12:57 ErikM B:\20Files\A20158.03 KMB - Nisqually State Park\Drawings\Ph 3A - Pump House\Pump House Bid Review.dwg Layout Name: S2.1

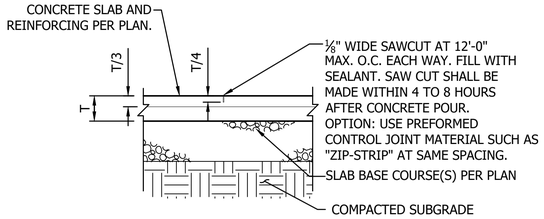

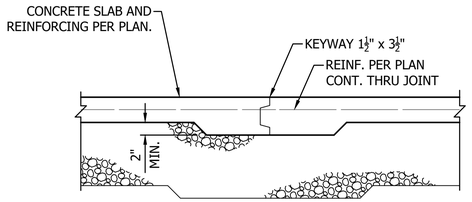

1 - SLAB CONTROL/CONSTR. JOINT

NOT TO SCALE

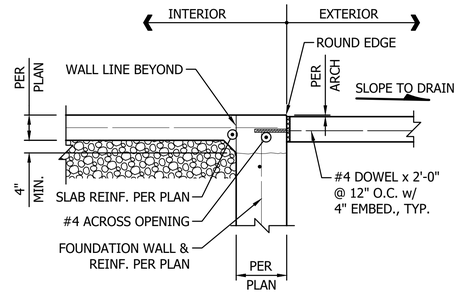

2 - SLAB POUR OVER

NOT TO SCALE

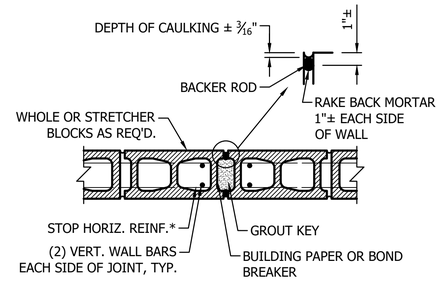

NOTES:
- LOCATE CONTROL JOINTS WHERE SHOWN ON THE PLANS.
* DO NOT STOP BOND BEAM REINFORCEMENT AT TOP OR BOTTOM OF WALL, OR AT ROOF CONNECTIONS.

3 - CMU WALL CONTROL JOINT

NOT TO SCALE

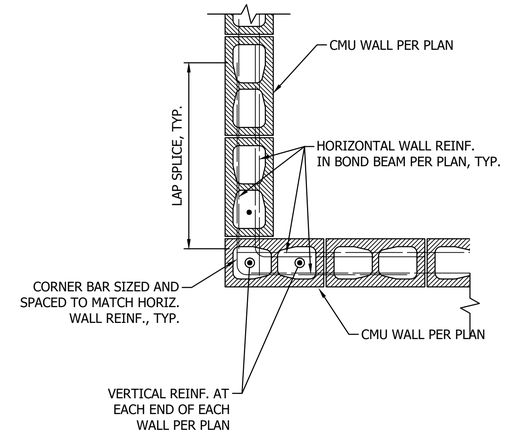

4 - CMU WALL CORNER

NOT TO SCALE

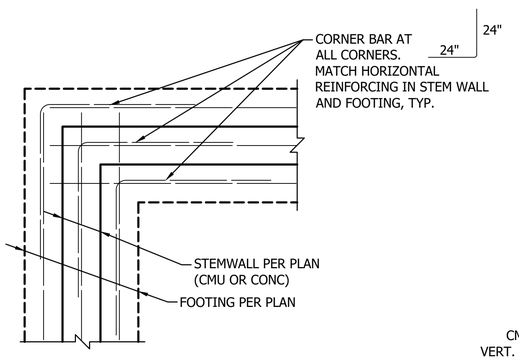

5 - FOOTING CORNER REINF.

NOT TO SCALE

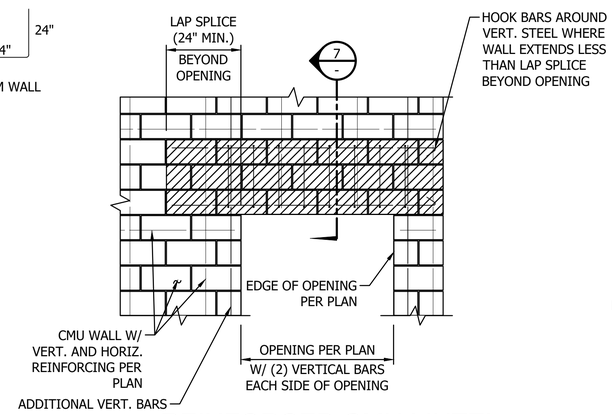

6 - REINFORCED CMU LINTEL

NOT TO SCALE

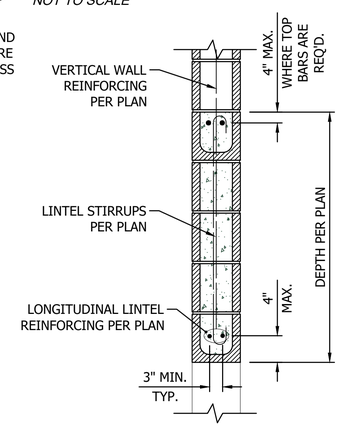

7 - LINTEL SECTION

NOT TO SCALE

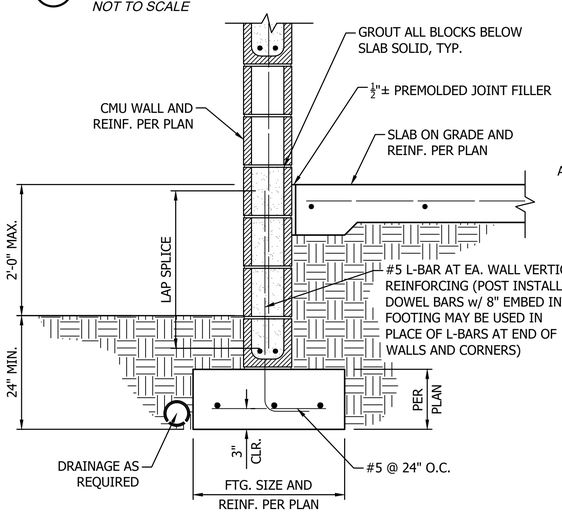

9 - FOOTING & WALL SECTION

NOT TO SCALE

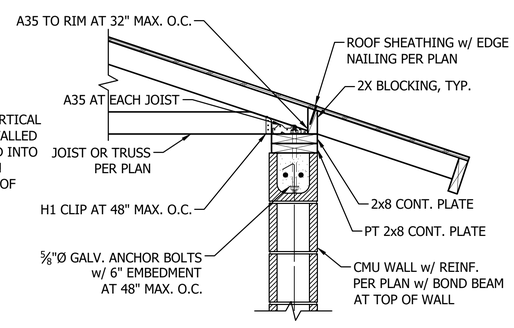

10 - ROOF TRUSS TO WALL

NOT TO SCALE

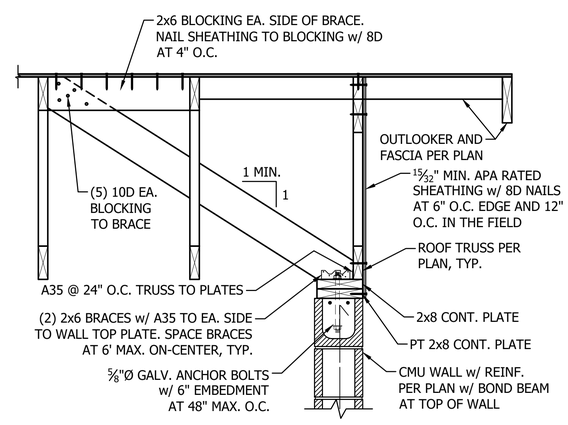

11 - END WALL ROOF BRACING

NOT TO SCALE

BID SET

SHEET 82 OF 226

CAD NO.

NO.	REVISIONS	INT.	APP.	DATE

ACTION	BY	DATE
DESIGNED	ECM	01/03/2025
DRAWN	ECM	01/03/2025
CHECKED		
CHECKED (HDQTS.)		

ERIK CHRISTOPHER MARTIN
STATE OF WASHINGTON
40851
STRUCTURAL ENGINEER
PROFESSIONAL ENGINEER
01/07/2025

SARGENT
SARGENT ENGINEERS, INC.
320 Ronlee Lane NW • Olympia, WA 98502
Tel. 360 867-9284 • Fax 360 867-9318
SEI Pr. No. – A20158.03
PROJECT ENGINEER

WASHINGTON STATE PARKS AND RECREATION COMMISSION

NISQUALLY STATE PARK

PHASE 3A MAINTENANCE BUILDING AND WWTF

PUMP HOUSE

STRUCTURAL DETAILS
S5.0

SCALE
AS SHOWN

PARKS FILE#

Plotted: Jan 07, 2025 – 12:57 ErikM B:\20Files\A20158.03 KMB – Nisqually State Park\Drawings\Ph 3A – Pump House\Pump House Bid Review.dwg Layout Name: S5.0

MECHANICAL GENERAL NOTES

1. UNSIZED DUCTS SHALL MATCH THE SIZE OF THE LARGEST ADJACENT DUCT THAT IS SIZED. WHERE THE ADJACENT DUCT SIZE IS NOT SHOWN, PROVIDE THE FOLLOWING SIZED DUCTS (OR EQUIVALENT RECTANGULAR).
2. WHERE DUCT SIZES ARE NOT SHOWN, SIZE DUCTS FOR A MAXIMUM VELOCITY OF 500 FT/MIN.
3. VERIFY LOCATIONS OF ITEMS WITH ARCHITECTURAL PLANS PRIOR TO BEGINNING WORK. NOTIFY ARCHITECT/OWNER OF DISCREPANCIES.
4. MATERIALS, METHODS, AND INSTALLATION SHALL COMPLY WITH THE PROVISIONS OF THE 2021 EDITION OF THE INTERNATIONAL MECHANICAL CODE.
5. MECHANICAL EQUIPMENT 1/2 HP AND LESS SHALL HAVE STARTER/CONTROL RELAY PROVIDED BY DIVISION 23. STARTERS FOR MECHANICAL EQUIPMENT LARGER THAN 1/2 HP PROVIDED BY DIVISION 26.
6. CONTRACTOR SHALL CAREFULLY COORDINATE WORK W/ ALL OTHER TRADES, ESPECIALLY IN CEILING SPACES WHERE SPACE IS TIGHT. SHEET METAL CONTRACTOR SHALL HAVE PRIORITY OVER OTHER MECHANICAL TRADES IN CEILING SPACE WHERE CONFLICTS OCCUR.
7. ALL DUCTWORK SHOWN IS SCHEMATIC, CONTRACTOR SHALL PROVIDE ALL OFFSETS/ELBOWS AS REQ'D TO ALLOW ROUTING AROUND STRUCTURE, ELECTRICAL, & OTHER INTERFERENCES.
8. ALL DUCT WALL PENETRATIONS THROUGH WALLS AND FLOORS SHALL BE PROVIDED WITH CLOSURE COLLARS AND BE TIGHTLY SEALED TO PREVENT THE TRANSMISSION OF NOISE.
9. DUCT PENETRATIONS OF FIRE RATED WALLS OR FLOORS SHALL BE SLEEVED AND FIRE STOPPED WITH LISTED MATERIALS SO AS TO MAINTAIN THE INTEGRITY AND RATING OF THE FLOOR OR WALL.
10. SHIFT AIR INLETS/OUTLETS FROM LOCATIONS SHOWN AS REQ'D TO AVOID CONFLICTS W/STRUCTURE & OTHER ITEMS. SUCH SHIFTS SHALL MAINTAIN SYMMETRY OF AIR TERMINALS & SHALL HAVE PRIOR APPROVAL OF ARCHITECT/ENGINEER.
11. PROVIDE MANUAL VOLUME DAMPERS IN ALL BRANCH DUCTS AND SPLITS IN MAIN DUCTS AND WHERE REQ'D BY BALANCERS.

ENERGY CODE REQUIREMENTS

A. HVAC EQUIPMENT SHALL MEET THE MINIMUM EFFICIENCIES (EER) LISTED IN THE WASHINGTON STATE ENERGY CODE TABLES C403.3.2.

B. PROVIDE SWITCHES AT ALL EXTERIOR DOORS INDICATING OPEN/CLOSED STATUS TO HVAC CONTROL SYSTEM IN ACCORDANCE WITH W.S.E.C. C403.4.1.6. CONTROLS SHALL DISABLE MECHANICAL HEATING/COOLING OR CHANGE TEMPERATURE SETPOINTS TO 55°F HEATING & 85°F COOLING FOR ANY ZONE IN WHICH AN EXTERIOR DOOR HAS BEEN OPEN FOR MORE THAN 5 MINUTES.

C. DAMPER LOCATIONS, LEAKAGE RATE, CONTROL TYPE, AND MAX CLEARANCE TO COMPLY WITH SECTION C403.7.8 OF THE W.S.E.C.

D. INSULATE ALL DUCTS IN CONDITIONED SPACE TO R–3.3. INSULATE DUCTS IN UNCONDITIONED SPACE TO R–8. INSULATE OUTSIDE AIR DUCTS WITH R–16.

E. ALL DUCTWORK SHOWN SHALL BE CONSTRUCTED TO 1" PRESSURE CLASSIFICATION PER SMACNA.

F. ALL DUCT WORK SHALL BE SEALED. SEAL ALL TRANSVERSE JOINTS AND LONGITUDINAL SEAMS AS REQUIRED BY 603.90 OF THE INTERNATIONAL MECHANICAL CODE.

G. PROVIDE ENERGY EFFICIENT MOTORS ON THE HVAC EQUIPMENT AS REQUIRED IN WASHINGTON STATE ENERGY CODE PARAGRAPH C405.8. MOTORS LESS THAN 1HP SHALL HAVE A MINIMUM EFFICIENCY OF 70%.

H. TEST AND BALANCE EACH HVAC SYSTEM. ADJUST REGISTERS AND DAMPERS FOR AIR FLOW INDICATED ON DRAWINGS. ADJUST FAN SPEED FOR TOTAL AIR FLOW.

I. COMMISSIONING NOT REQUIRED PER WSEC SECTION C408.1. SYSTEMS ARE LESS THAN 240,000 BTU/HR COOLING AND 300,000 BTU/HR HEATING.

J. PROVIDE RECORD DRAWING, OWNERS MANUALS, BALANCING REPORT AND COMMISSIONING REPORT TO OWNER AT COMPLETION OF PROJECT. SEE C103.6 OF THE W.S.E.C.

K. PROVIDE SYSTEMS OPERATIONS TRAINING TO THE BUILDING OWNER PER WSEC PARAGRAPH C103.6.4.

HVAC LEGEND

SYMBOL	DESCRIPTION
—— C ——	CONDENSATE LINE
——RG——	REFRIGERANT GAS
——RL——	REFRIGERANT LIQUID
20/12L	DUCT (FIRST FIGURE, SIDE SHOWN)
20/12 20/12L	LINED DUCT – DIM. FOR NET FREE AREA EOL = END OF LINING
R (D)	RISE: R OR DROP: D ARROW IN DIRECTION OF FLOW
	DUCT SECTION (SUPPLY)
	DUCT SECTION (EXHAUST OR RETURN)
ø	ROUND DUCT
	VOLUME DAMPER (MANUAL)
M	MOTORIZED DAMPER
	FLEXIBLE CONNECTION
	FIRE DAMPER COMBINATION FIRE/SMOKE DAMPER
	FLEXIBLE DUCT
	TURNING VANES
SIZE,SYMBOL CFM	CEILING OUTLET: WHERE 2 CFM'S SHOWN, LARGER=HIGH SPEED SMALLER = LOW SPEED CFM
SIZE,SYMBOL CFM	CEILING INLET
SIZE,SYMBOL CFM	WALL OUTLET (OR INLET)
T T_G T_A	THERMOSTAT G = WITH GUARD, A = AVERAGED WITH OTHER
S	SWITCH
BP	TIME CLOCK BYPASS
IT	INTERVAL TIMER
T	THERMAL WELL
	PRESSURE TEMPERATURE TEST PORT "PETE'S PLUG"
1 / M3	DETAIL IDENTIFICATION NUMBER SHEET ON WHICH DETAIL IS SHOWN
A / M3	SECTION IDENTIFICATION LETTER SHEET ON WHICH SECTION IS SHOWN

ABBREV.	DESCRIPTION	ABBREV.	DESCRIPTION
AAV	AUTOMATIC AIR VENT	MAX	MAXIMUM
AFF	ABOVE FINISHED FLOOR	MBH	THOUSAND BTUH
APPROX	APPROXIMATELY	MCA	MINIMUM CIRCUIT AMPS
ARCH	ARCHITECTURAL	MECH	MECHANICAL
AUTO	AUTOMATIC	MFR	MANUFACTURER
BLDG	BUILDING	MIN	MINIMUM
B.O.D	BOTTOM OF DUCT	NO	NORMALLY OPEN
BTU	BRITISH THERMAL UNIT	NO.	NUMBER
BTUH	BRITISH THERMAL UNIT/HOUR	NTS	NOT TO SCALE
CAP	CAPACITY	OA	OUTSIDE AIR
CFM	CUBIC FEET PER MINUTE	OBD	OPPOSED BLADE DAMPER
CLG	CEILING	PD	PRESSURE DROP
COMP	COMPRESSOR	PH	PHASE
CONN	CONNECTION	P.O.C.	POINT OF CONNECTION
CONT	CONTINUE, CONTINUATION	RA	RETURN AIR
COP	COEFFICIENT OF PERFORMANCE	REF	REFERENCE
DB	DRY BULB	REQ'D	REQUIRED
DEG F°	DEGREE FAHRENHEIT	RLA	RATED LOAD AMPS
DIA, Ø	DIAMETER	RM	ROOM
DL	DOOR LOUVER	RPM	REVOLUTIONS PER MINUTE
DN	DOWN	SA	SUPPLY AIR
DWG	DRAWING	SMACNA	SHEET METAL AND AIR CONDITIONING CONTRACTORS NATIONAL ASSOCIATION
(E)	EXISTING		
EA	EACH		
EAT	ENTERING AIR TEMPERATURE	S.O.	SCREENED OPENING
EDB	ENTERING DRY BULB	TD	TRANSFER DUCT
EER	ENERGY EFFICIENCY RATING	TEMP	TEMPERATURE
EFF	EFFICIENCY	TG	TRANSFER GRILLE
ELEC	ELECTRICAL, ELECTRIC	TYP	TYPICAL
EOL	END OF LINING	U.C.	UNDERCUT DOOR
ESP	EXTERNAL STATIC PRESSURE	UNO	UNLESS NOTED OTHERWISE
EWB	ENTERING WET BULB	V	VOLTS, VOLTAGE
EXH	EXHAUST	VTR	VENT THROUGH ROOF
EXIST	EXISTING	W	WATT
FL	FLOOR	W/	WITH
FLA	FULL LOAD AMPS	WB	WET BULB
FLEX	FLEXIBLE	WCO	WALL CLEAN OUT
FPM	FEET PER MINUTE		
FV	FACE VELOCITY		
GAL	GALLON		
GALV.	GALVANIZED		
HP	HORSE POWER		
I.E.	INVERT ELEVATION		
IN	INCH		
INTEGR.	INTEGRAL		
KW	KILOWATT		
LAT	LEAVING AIR TEMPERATURE		
LDB	LEAVING DRY BULB		
LWB	LEAVING WET BULB		
LWT	LEAVING WATER TEMPERATURE		

SHEET INDEX

M–001 – LEGEND & NOTES
M–002 – MAINTENANCE BUILDING SCHEDULES
M–101 – MAINTENANCE BUILDING HVAC PLANS
M–201 – MAINTENANCE BUILDING HVAC ELEVATIONS
M–501 – DETAILS

BID SET

PUBLIC IMPROVEMENTS

1001200
PERMIT #

COUNTY ENGINEER — DATE

PIERCE COUNTY ORDINANCE NOs: STORM _____ ROAD _____

1. PRE-CONSTRUCTION MEETING SHALL BE REQUESTED AT LEAST 48-HOURS IN ADVANCE OF THE START OF CONSTRUCTION. CONTACT _____, THE AREA INSPECTOR, AT 253-798-_____.
2. APPOINT A CERTIFIED EROSION AND SEDIMENT CONTROL LEAD WHO SHALL BE PROVIDED A COPY OF THE SWPPP, EROSION CONTROL PLAN & INSPECTION SCHEDULE.
3. FAILURE TO OBTAIN REQUIRED INSPECTIONS MAY ENDANGER OR DELAY PROJECT APPROVAL.
4. ALL WORK IN THE PUBLIC RIGHT-OF-WAY REQUIRES A GENERAL RIGHT-OF-WAY PERMIT FROM PIERCE COUNTY PLANNING AND PUBLIC WORKS.

VEACH Consulting Engineers LLC
12202 Pacific Ave. S Suite B Tacoma, WA 98444
Ph: 253-274-5701 Proj# 2032

CAD NO.

NO.	REVISIONS	INT.	APP.	DATE

ACTION	BY	DATE
DESIGNED	VCE	4/30/24
DRAWN	VCE	1/3/25
CHECKED (FIELD)		
CHECKED (HDQTS.)		

FRED A. VEACH — STATE OF WASHINGTON — 36001 — REGISTERED PROFESSIONAL ENGINEER
EXPIRES 8-17-25

REGISTERED STAMP

WASHINGTON STATE PARKS AND RECREATION COMMISSION

NISQUALLY STATE PARK

PHASE 3A MAINTENANCE BUILDING AND WWTF

M-001

LEGEND & NOTES

SCALE: AS NOTED

PARKS FILE#

ELECTRIC UNIT HEATER SCHEDULE

SYMBOL	SPECIFIED MFR. AND MODEL NO.	TYPE	AREA/UNIT SERVED	CFM	WEIGHT (LBS.)	NOMINAL SIZE	ELECTRICAL		REMARKS
							WATTS	VOLTS/PH	
UH–1	KING KB SERIES	UNIT HEATER	MAINTENANCE SHOP	925	47	17X18X15	15 KW	208/3	PROVIDED FOR FREEZE PROTECTION. SEE WSEC C403.1.4 EXCEPTION 15
UH–2	KING KB SERIES	UNIT HEATER	MAINTENANCE SHOP	1100	55	21X18X15	20 KW	208/3	PROVIDED FOR FREEZE PROTECTION. SEE WSEC C403.1.4 EXCEPTION 15

PUBLIC IMPROVEMENTS

1001200
PERMIT #

COUNTY ENGINEER

DATE

PIERCE COUNTY ORDINANCE NOs: STORM _____ ROAD _____

1. PRE-CONSTRUCTION MEETING SHALL BE REQUESTED AT LEAST 48-HOURS IN ADVANCE OF THE START OF CONSTRUCTION. CONTACT _____, THE AREA INSPECTOR, AT 253-798-_____.
2. APPOINT A CERTIFIED EROSION AND SEDIMENT CONTROL LEAD WHO SHALL BE PROVIDED A COPY OF THE SWPPP, EROSION CONTROL PLAN & INSPECTION SCHEDULE.
3. FAILURE TO OBTAIN REQUIRED INSPECTIONS MAY ENDANGER OR DELAY PROJECT APPROVAL.
4. ALL WORK IN THE PUBLIC RIGHT-OF-WAY REQUIRES A GENERAL RIGHT-OF-WAY PERMIT FROM PIERCE COUNTY PLANNING AND PUBLIC WORKS.

CAD NO.

NO.	REVISIONS	INT.	APP.	DATE

RADIANT ELECTRIC HEATER SCHEDULE

SYMBOL	MANUFACTURER AND SERIES NO.	SIZE (LxH)	WATTS	VOLTS/PH	AMPS	WEIGHT (LBS.)	TYPE	REMARKS
ERH–1	BBC INDUSTRIES THERMAZONE	48X12	6000	208/1	27.0	38	INFRARED RADIANT	1
RCH–1	KING KCV SERIES	34X4	420	120/1	3.5	20	RADIANT COVE HEATER	PROVIDED FOR FREEZE PROTECTION. SEE WSEC C403.1.4 EXCEPTION 15 1

NOTES: 1 SEE FLOOR PLAN FOR NUMBER OF UNITS.

EXHAUST FAN SCHEDULE

SYMBOL	SPECIFIED MFR. AND MODEL NO.	TYPE	AREA SERVED	CFM	ESP	RPM	ELECTRICAL		DRIVE	CONTROL	WEIGHT	REMARKS
							HP	V/PH				
EF–1	GREENHECK SE1–14–432–VG	SIDEWALL PROPELLER	MAINTENANCE SHOP B101 SOUTH	2180	0.20	1725	1/4	120/1	DIRECT	TIMER SWITCH	40 LBS	1
EF–2	NUTONE QTXEN080	CEILING EXHAUSTER	RESTROOM B103	80	0.1	–	0.3	120/1	DIRECT	2	12 LBS	W/ INTEGRAL BACK DRAFT DAMPER
EF–3	GREENHECK SP–A190	CEILING EXHAUSTER	UTILITY B104	180	0.25	1400	0.1	120/1	DIRECT	2	17 LBS	W/ INTEGRAL BACK DRAFT DAMPER
EF–4	GREENHECK SE1–8–440–VG	SIDEWALL PROPELLER	MEZZANINE/ STORAGE B200	220	0.25	1725	1/4	120/1	DIRECT	TIMER SWITCH	40 LBS	1

ACCESSORIES: 1 WITH WEATHERHOOD, WALL HOUSING, AND MOTORIZED DAMPER WD300 2 OCCUPANCY SWITCH AND TIMER TO RUN 2 MIN AFTER SWITCH IS OFF

ACTION	BY	DATE
DESIGNED	VCE	4/30/24
DRAWN	VCE	1/3/25
CHECKED (FIELD)		
CHECKED (HDQTS.)		

EXPIRES 8-17-25

REGISTERED STAMP

DUCT INSULATION SCHEDULE

DUCT TYPE	DUCT LOCATION	INSULATION R–VALUE	OTHER REQUIREMENTS
OUTSIDE AIR INTAKE, EXHAUST	WITHIN CONDITIONED SPACE, FROM AUTOMATIC SHUTOFF DAMPER TO INTERIOR INLET/OUTLET	R–8	PER THE W.S.E.C SECTION C403.10.1
OUTSIDE AIR INTAKE, EXHAUST	WITHIN CONDITIONED SPACE, FROM AUTOMATIC SHUTOFF DAMPER TO BUILDING EXTERIOR	R–16	PER THE W.S.E.C SECTION C403.10.1

NOTE: REQUIREMENTS APPLY TO THE DUCT TYPE LISTED, WHETHER HEATED OR MECHANICALLY COOLED. MECHANICALLY COOLED DUCTS REQUIRING INSULATION SHALL HAVE A VAPOR RETARDER, WITH A PERM RATING NOT GREATER THAN 0.5 AND ALL JOINTS SEALED.

VENTILATION

AREA TYPE	AREA (SF)	VENTILATION REQUIREMENTS PER IMC 403.3.1	REQ'D VOLUME		OUTSIDE AIR PROVIDED	EXHAUST PROVIDED
			OUTSIDE AIR	EXHAUST		
RESTROOM B103	87	70 CFM/FIXTURE EXH.	–	70	–	80
MAINTENANCE SHOP B101 NORTH	2172	0.75 CFM/SF EXH	–	1629	EXISTING SYSTEMS TO REMAIN	
MAINTENANCE SHOP B101 SOUTH	2763	0.75 CFM/SF EXH	–	2072	2180	2180
UTILITY B104	133	1 CFM/SF EXH.	–	133	–	180
MEZZANINE/ STORAGE B200	1262	0.12 CFM/SF OA	151	–	220	220

SEQUENCE OF OPERATIONS

MAINTENANCE SHOP SPACES:

EXHAUST FANS (EF–1, EF–4): PROVIDE A DIGITAL TIME CLOCK TO OPERATE FANS WHEN THE BUILDING IS OCCUPIED. FANS SHALL BE OFF WHEN THEY ARE UNOCCUPIED. EXHAUST FAN MOTORIZED DAMPERS SHALL CLOSE WHEN THE EXHAUST FAN IS OFF.

AIR INTAKES: MOTORIZED DAMPERS ON AIR INTAKE LOUVERS AND INTAKE HOODS SHALL BE INTERLOCKED WITH THE ASSOCIATED EXHAUST FAN(S). DAMPERS SHALL OPEN WHEN FAN IS ON, AND SPRING RETURN CLOSED WHEN FAN IS OFF.

BATHROOM ELECTRIC RADIANT HEATERS (RCH–1): ELECTRIC RADIANT HEATERS SHALL BE CONTROLLED BY PROGRAMMABLE THERMOSTATS. THERMOSTATS SHALL PROVIDE A 7–DAY OCCUPANCY SCHEDULE. INITIAL ROOM TEMPERATURE SETPOINT: 45°F

SHOP FLOOR ELECTRIC RADIANT HEATERS (ERH–1): PROVIDE ELECTRONIC COUNTDOWN TIMERS TO OPERATE ELECTRIC RADIANT HEATERS WHEN THE BUILDING IS OCCUPIED. RADIANT HEATERS TO BE INTERLOCKED WITH ROLL UP DOORS IN ZONE. RADIANT HEATERS SHALL NOT OPERATE WHILE DOOR IS OPEN.

ELECTRIC UNIT HEATERS (UH–1, UH–2): ELECTRIC UNIT HEATERS SHALL BE CONTROLLED BY PROGRAMMABLE THERMOSTATS. THERMOSTATS SHALL PROVIDE A 7–DAY OCCUPANCY SCHEDULE. UNIT HEATERS (ERH–2) TO BE INTERLOCKED WITH ROLL UP DOORS IN ZONE. HEATERS SHALL NOT OPERATE WHILE DOOR IS OPEN. INITIAL ROOM TEMPERATURE SETPOINT: 45°F

EXHAUST FANS (EF–2, EF–3): RESTROOM AND UTILITY ROOM EXHAUST FANS ARE TO BE CONNECTED WITH THE LIGHT SWITCH. PROVIDE TIMER FOR FAN TO RUN A MINIMUM OF 2 MINUTES AFTER LIGHT IS TURNED OFF.

BID SET

WASHINGTON STATE PARKS AND RECREATION COMMISSION

NISQUALLY STATE PARK

PHASE 3A MAINTENANCE BUILDING AND WWTF

M-002

MAINTENANCE BUILDING SCHEDULES

SCALE: AS NOTED

VEACH Consulting Engineers LLC
12202 Pacific Ave. S Suite B Tacoma, WA 98444
Ph: 253-274-5701 Proj# 2032

PARKS FILE#

KEYED NOTES:

1. LOW-LEAKAGE MOTORIZED DAMPER TO CLOSE WHEN EXHAUST FAN IS OFF.
2. SEE EXHAUST FAN DETAIL 3/M-501
3. HANG AT 14' AFF OR HIGHER FROM FACTORY MOUNT
4. LOCATE EXHAUST OUTLETS MIN 3' FROM ALL OPERABLE DOORS AND WINDOWS, AND MIN 10' FROM ALL MECHANICAL INTAKES.
5. SEE DETAIL 1/M-501.
6. HANG AT 10' AFF OR HIGHER FROM FACTORY MOUNT
7. PROVIDE WIRING IN CONDUIT BETWEEN SWITCH AND EXHAUST FAN.

DRAWING NOTES:

1. CONTRACTOR SHALL COORDINATE DUCT INSTALLATION AND OFFSET DUCTS AROUND BUILDING FEATURES, INCLUDING LIGHTS, PLUMBING, CONDUIT, FIRE SPRINKLER PIPING, AND OTHERS.
2. PROVIDE 45° CHAMFERED DUCT TAPS FOR ALL RECTANGULAR BRANCH DUCTS. PROVIDE 45° CONICAL TAPS FOR ALL ROUND BRANCH DUCTS.
3. SPECIAL COORDINATION OF DUCTWORK AND DUCTWORK SHOP DRAWINGS ARE REQUIRED, SEE SPECIFICATIONS.
4. PROVIDE FLEXIBLE DUCT CONNECTIONS AT ALL DUCT CONNECTIONS TO FANS AND HVAC UNITS.
5. CONTRACTOR SHALL INVESTIGATE ALL EXISTING CONDITIONS AND REPORT ALL VARIATIONS FROM PLANS TO ENGINEER.
6. PROVIDE THERMOSTATS WHERE SHOWN AND WHERE REQUIRED FOR OPERATION OF HVAC EQUIPMENT. LOCATE THERMOSTATS AT ACCESSIBLE LOCATIONS A MAXIMUM OF 48" ABOVE FLOOR FOR ADA ACCESS.
7. SEE CONTROL SEQUENCES ON SHEET M-002 AND SPECIFICATION 230900 FOR HVAC CONTROL WORK.
8. AIR BALANCING CONTRACTOR SHALL VERIFY SUPPLY AIR FLOW, RETURN AIR FLOW, AND OUTSIDE AIR QUANTITIES FOR EACH NEW HVAC UNIT. ADJUST DAMPER POSITIONS AND FAN SPEED TO ACHIEVE AIR FLOWS LISTED ON SCHEDULES.

PUBLIC IMPROVEMENTS — PERMIT # 1001200

COUNTY ENGINEER — DATE

PIERCE COUNTY ORDINANCE NOs: STORM _____ ROAD _____

1. PRE-CONSTRUCTION MEETING SHALL BE REQUESTED AT LEAST 48-HOURS IN ADVANCE OF THE START OF CONSTRUCTION. CONTACT _____, THE AREA INSPECTOR, AT 253-798-_____.
2. APPOINT A CERTIFIED EROSION AND SEDIMENT CONTROL LEAD WHO SHALL BE PROVIDED A COPY OF THE SWPPP, EROSION CONTROL PLAN & INSPECTION SCHEDULE.
3. FAILURE TO OBTAIN REQUIRED INSPECTIONS MAY ENDANGER OR DELAY PROJECT APPROVAL.
4. ALL WORK IN THE PUBLIC RIGHT-OF-WAY REQUIRES A GENERAL RIGHT-OF-WAY PERMIT FROM PIERCE COUNTY PLANNING AND PUBLIC WORKS.

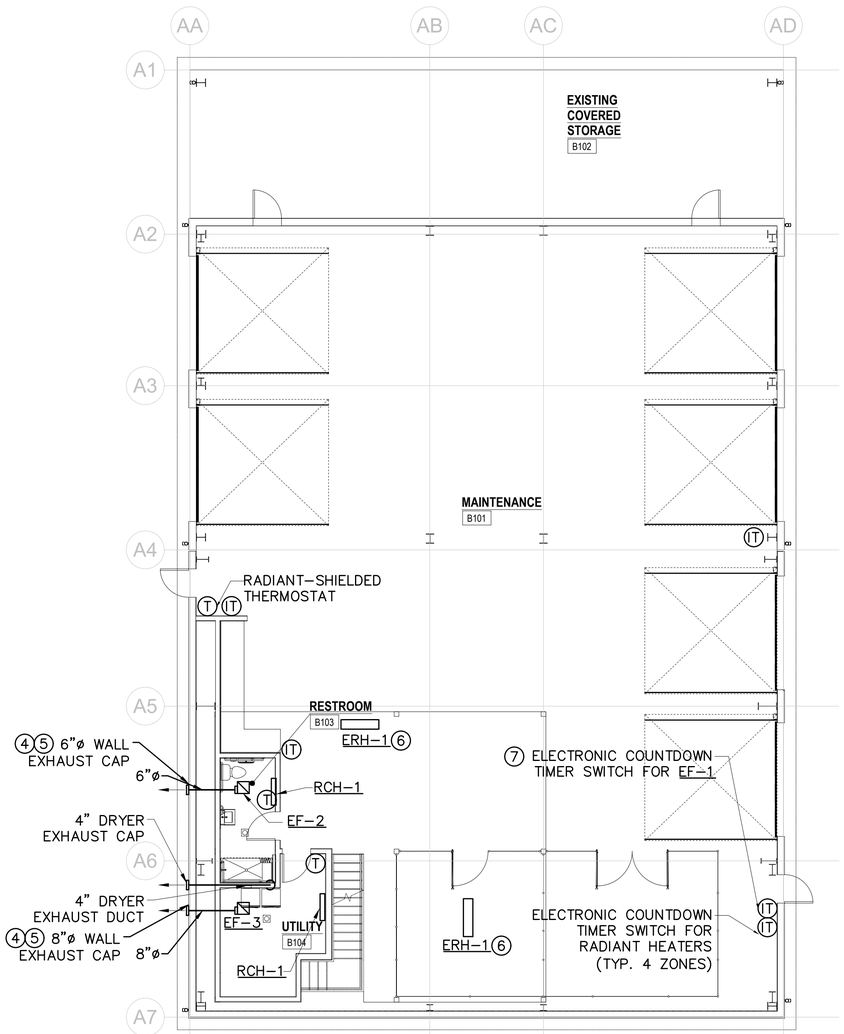

MAINTENANCE BUILDING FIRST FLOOR MECHANICAL PLAN

SCALE: 1/8" = 1' - 0"

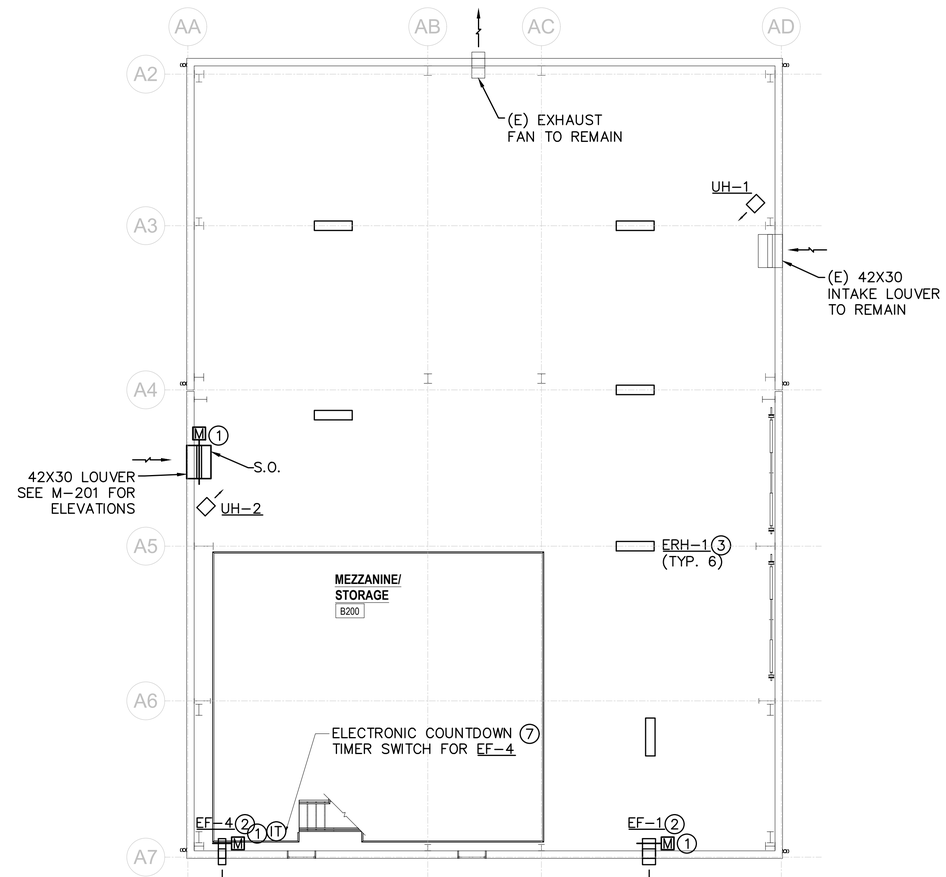

MAINTENANCE BUILDING LOFT MECHANICAL PLAN

SCALE: 1/8" = 1' - 0"

BID SET

VEACH Consulting Engineers LLC
12202 Pacific Ave. S Suite B Tacoma, WA 98444
Ph: 253-274-5701 Proj# 2032

SHEET 85 OF 226

CAD NO.

NO.	REVISIONS	INT.	APP.	DATE

ACTION	BY	DATE
DESIGNED	VCE	4/30/24
DRAWN	VCE	1/3/25
CHECKED (FIELD)		
CHECKED (HDQTS.)		

FRED A. VEACH — STATE OF WASHINGTON — 34001 — REGISTERED PROFESSIONAL ENGINEER

EXPIRES 8-17-25

REGISTERED STAMP

WASHINGTON STATE PARKS AND RECREATION COMMISSION

NISQUALLY STATE PARK

PHASE 3A MAINTENANCE BUILDING AND WWTF

M-101

MAINTENANCE BUILDING FIRST FLOOR HVAC PLAN

SCALE: AS NOTED

PARKS FILE#

PUBLIC IMPROVEMENTS

1001200
PERMIT #

COUNTY ENGINEER — DATE

PIERCE COUNTY ORDINANCE NOs: STORM _____ ROAD _____

1. PRE-CONSTRUCTION MEETING SHALL BE REQUESTED AT LEAST 48-HOURS IN ADVANCE OF THE START OF CONSTRUCTION. CONTACT _____, THE AREA INSPECTOR, AT 253-798-_____.
2. APPOINT A CERTIFIED EROSION AND SEDIMENT CONTROL LEAD WHO SHALL BE PROVIDED A COPY OF THE SWPPP, EROSION CONTROL PLAN & INSPECTION SCHEDULE.
3. FAILURE TO OBTAIN REQUIRED INSPECTIONS MAY ENDANGER OR DELAY PROJECT APPROVAL.
4. ALL WORK IN THE PUBLIC RIGHT-OF-WAY REQUIRES A GENERAL RIGHT-OF-WAY PERMIT FROM PIERCE COUNTY PLANNING AND PUBLIC WORKS.

DRAWING NOTES:

1. CONTRACTOR SHALL INVESTIGATE ALL EXISTING CONDITIONS AND REPORT ALL VARIATIONS FROM PLANS TO ENGINEER.
2. SEE CONTROL SEQUENCES ON SHEET M-002 AND SPECIFICATION 230900 FOR HVAC CONTROL WORK.

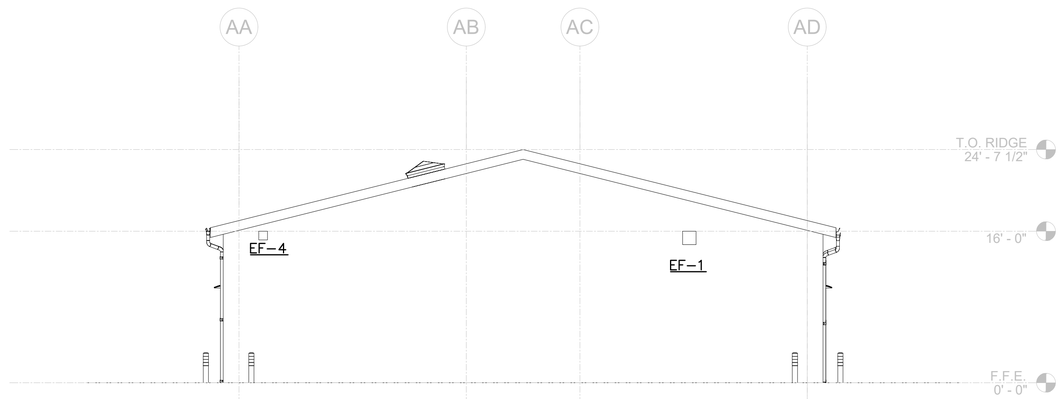

SOUTH EXTERIOR ELEVATION

SCALE: 1/8" = 1' – 0"

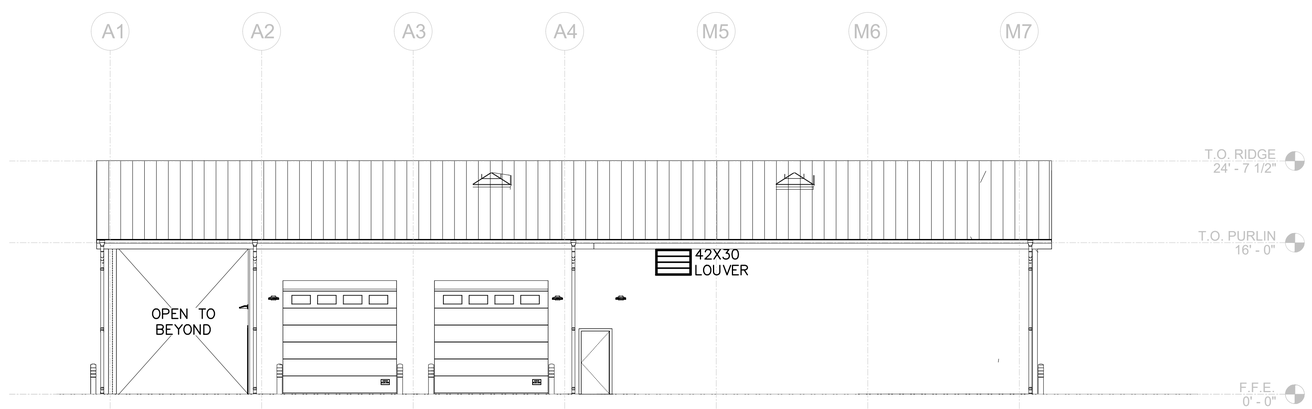

WEST EXTERIOR ELEVATION

SCALE: 1/8" = 1' – 0"

BID SET

VEACH Consulting Engineers LLC
12202 Pacific Ave. S Suite B Tacoma, WA 98444
Ph: 253-274-5701 Proj# 2032

CAD NO.

NO.	REVISIONS	INT.	APP.	DATE

ACTION	BY	DATE
DESIGNED	VCE	4/30/24
DRAWN	VCE	1/3/25
CHECKED (FIELD)		
CHECKED (HDQTS.)		

FRED A. VEACH — STATE OF WASHINGTON — 34001 — REGISTERED PROFESSIONAL ENGINEER

EXPIRES 8-17-25

REGISTERED STAMP

WASHINGTON STATE PARKS AND RECREATION COMMISSION

NISQUALLY STATE PARK

PHASE 3A MAINTENANCE BUILDING AND WWTF

M-201

ELEVATIONS

SCALE: AS NOTED

PARKS FILE#

PUBLIC IMPROVEMENTS

1001200
PERMIT #

COUNTY ENGINEER — DATE

PIERCE COUNTY ORDINANCE NOs: STORM _____ ROAD _____

1. PRE-CONSTRUCTION MEETING SHALL BE REQUESTED AT LEAST 48-HOURS IN ADVANCE OF THE START OF CONSTRUCTION. CONTACT _____, THE AREA INSPECTOR, AT 253-798-_____.
2. APPOINT A CERTIFIED EROSION AND SEDIMENT CONTROL LEAD WHO SHALL BE PROVIDED A COPY OF THE SWPPP, EROSION CONTROL PLAN & INSPECTION SCHEDULE.
3. FAILURE TO OBTAIN REQUIRED INSPECTIONS MAY ENDANGER OR DELAY PROJECT APPROVAL.
4. ALL WORK IN THE PUBLIC RIGHT-OF-WAY REQUIRES A GENERAL RIGHT-OF-WAY PERMIT FROM PIERCE COUNTY PLANNING AND PUBLIC WORKS.

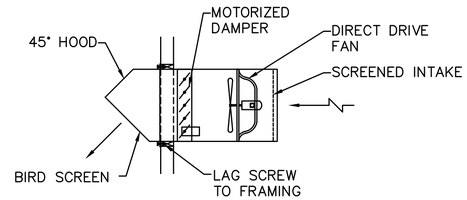

EXHAUST FAN DETAIL

3 / M-501

NOT TO SCALE

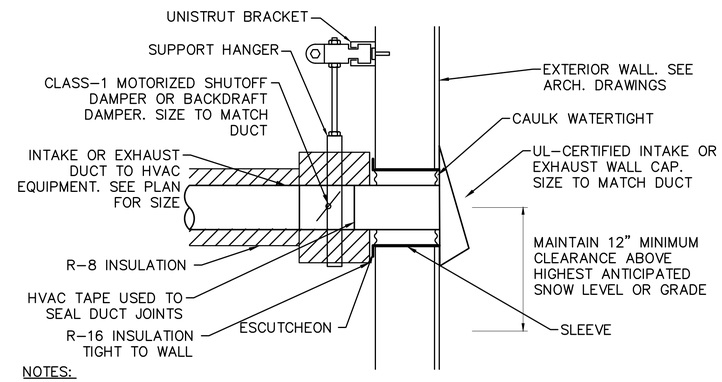

NOTES:

1. PROVIDE BACKDRAFT DAMPERS EQUIPPED WITH GASKETED SEALS ON ALL OUTSIDE AIR INTAKES AND EXHAUST OUTLETS HAVING AIRFLOWS OF 400 CFM OR LESS. PROVIDE CLASS-1 MOTORIZED SHUTOFF DAMPERS ON ALL OUTSIDE AIR INTAKES AND EXHAUST OUTLETS WITH AIRFLOWS GREATER THAN 400 CFM.
2. INSULATION VALUES SHOWN ONLY APPLY TO DUCTS LOCATED IN CONDITIONED SPACE. WHERE LOCATED IN UNCONDITIONED SPACE, REDUCE ALL INSULATION VALUES TO R-6.

INTAKE/EXHAUST VENT PENETRATION DETAIL

1 / M-501

NOT TO SCALE

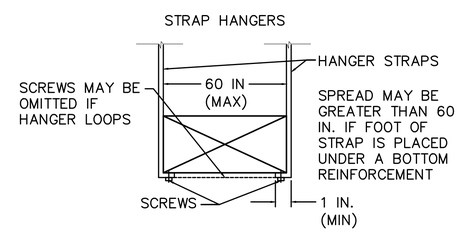

NOTES:

1. SIZE HANGER COMPONENTS AND FASTENERS PER SMACMA HVAC DUCT CONSTRUCTION STANDARDS, CHAPTER 5, THIRD EDITION.
2. WIRE HANGERS ARE NOT ACCEPTABLE
3. HANGER ATTACHMENTS TO STRUCTURE SHALL BE OF TYPES AND SIZES ALLOWED BY SMACMA HVAC DUCT CONSTRUCTION STANDARDS, THIRD EDITION.

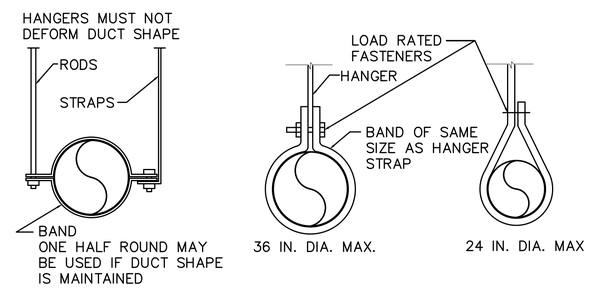

DUCT HANGER ATTACHMENTS

2 / M-501

NTS

BID SET

VEACH Consulting Engineers LLC
12202 Pacific Ave. S Suite B Tacoma, WA 98444
Ph: 253-274-5701 Proj# 2032

CAD NO.

NO.	REVISIONS	INT.	APP.	DATE

ACTION	BY	DATE
DESIGNED	VCE	4/30/24
DRAWN	VCE	1/3/25
CHECKED (FIELD)		
CHECKED (HDQTS.)		

FRED A. VEACH — STATE OF WASHINGTON — 34001 — REGISTERED PROFESSIONAL ENGINEER
EXPIRES 8-17-25

REGISTERED STAMP

WASHINGTON STATE PARKS AND RECREATION COMMISSION

NISQUALLY STATE PARK

PHASE 3A MAINTENANCE BUILDING AND WWTF

M-501

DETAILS

SCALE: AS NOTED

PARKS FILE#

PLUMBING GENERAL NOTES

1. VERIFY LOCATIONS OF ITEMS WITH ARCHITECTURAL PLANS PRIOR TO BEGINNING WORK. NOTIFY ARCHITECT/OWNER OF DISCREPANCIES.
2. MECHANICAL EQUIPMENT 1/2 HP AND LESS SHALL HAVE STARTER/CONTROL RELAY PROVIDED BY DIVISION 23. STARTERS FOR MECHANICAL EQUIPMENT LARGER THAN 1/2 HP PROVIDED BY DIVISION 26.
3. CONTRACTOR SHALL CAREFULLY COORDINATE WORK W/ ALL OTHER TRADES, ESPECIALLY IN CEILING SPACES WHERE SPACE IS TIGHT. SHEET METAL CONTRACTOR SHALL HAVE PRIORITY OVER OTHER MECHANICAL TRADES IN CEILING SPACE WHERE CONFLICTS OCCUR.
4. ALL PIPING SHOWN IS SCHEMATIC, CONTRACTOR SHALL PROVIDE ALL OFFSETS/ELBOWS AS REQ'D TO ALLOW ROUTING AROUND STRUCTURE, ELECTRICAL, & OTHER INTERFERENCES.
5. UNSIZED PLUMBING PIPING SHALL MATCH THE SIZE OF THE LARGEST ADJACENT CONNECTING PIPE SIZE SHOWN, WHERE THE ADJACENT PIPE IS NOT SHOWN (OR NOT CLEAR), THE PIPE SIZE SHALL BE BASED ON THE GPM FLOWING IN THE PIPE (USE FIXTURE UNITS AND CORRESPONDING GPM PER THE UPC FOR DOMESTIC WATER SYSTEMS, USE WASTE FIXTURE UNITS & UPC TABLES FOR WASTE/VENT SYSTEM), AND A VELOCITY NO GREATER THAN 4 FEET PER SECOND. USE UPC CURVES FOR GPM/VELOCITY FOR APPROPRIATE PIPING MATERIAL INVOLVED.
6. MATERIALS, METHODS, AND INSTALLATION SHALL COMPLY WITH THE PROVISIONS OF THE 2021 EDITION OF THE UNIFORM PLUMBING CODE, AND 2021 INTERNATIONAL MECHANICAL CODE.
7. ALL PIPE SIZES NOTED ON DRAWINGS ARE MINIMUMS.
8. SLOPE ALL WASTE PIPING AT 2% UNLESS OTHERWISE NOTED ON DRAWINGS. OBTAIN APPROVAL FROM CODE AUTHORITY BEFORE INSTALLING WASTE PIPING AT LESS THAN 2% (EVEN IF LESSER SLOPE IS INDICATED ON DRAWINGS).
9. HANGERS AND SUPPORTS FOR PIPING SHALL BE IN ACCORDANCE WITH SECTION 314 OF THE 2021 UNIFORM PLUMBING CODE.
10. PIPING PENETRATIONS OF FIRE RATED WALLS OR FLOORS SHALL BE SLEEVED AND FIRE STOPPED WITH LISTED MATERIALS SO AS TO MAINTAIN THE INTEGRITY AND RATING OF THE FLOOR OR WALL.
11. FOR EXACT ROUGH–IN LOCATIONS AND ELEVATIONS OF PLUMBING FIXTURES REFER TO ARCHITECTURAL DRAWINGS.
12. PROVIDE STOPS OR ANGLE VALVES AT ALL FIXTURES.
13. PROVIDE DIELECTRIC CONNECTIONS BETWEEN DISSIMILAR METALS.
14. CLEANOUTS SHALL BE INSTALLED SO THEY ARE EASILY ACCESSIBLE.
15. PLUMBING EQUIPMENT, VALVES AND TRAP PRIMERS SHALL BE LOCATED IN EASILY ACCESSIBLE LOCATIONS. UNLESS SHOWN ON ARCHITECTURAL DRAWINGS, REQUIRED ACCESS PANELS SHALL BE PROVIDED BY THE PLUMBING CONTRACTOR AND INSTALLED BY THE GENERAL CONTRACTOR.
16. THE PLUMBER SHALL PROVIDE AND LOCATE ALL REQUIRED FLOOR, WALL, AND FOOTING SLEEVES.

ENERGY CODE REQUIREMENTS

A. WATER HEATERS SHALL MEET THE MINIMUM EFFICIENCIES (EER) LISTED IN THE 2021 WASHINGTON STATE ENERGY CODE TABLE C404.2.

B. INSULATE DOMESTIC HOT WATER PIPING WITH U=0.27 INSULATION. UNDER 1–1/2" DIAMETER: 1" INSULATION. 1–1/2" AND OVER: 1–1/2" INSULATION.

C. PROVIDE ENERGY EFFICIENT MOTORS ON THE PUMP EQUIPMENT AS REQUIRED IN WASHINGTON STATE ENERGY CODE PARAGRAPH C405.8. MOTORS LESS THAN 1HP SHALL HAVE A MINIMUM EFFICIENCY OF 70%.

D. TEST AND BALANCE DOMESTIC HOT WATER SYSTEM. ADJUST BALANCING VALVES FOR FLOW INDICATED ON DRAWINGS.

E. PROVIDE TIMECLOCK AND THERMOSTATIC CONTROL OF HOT WATER CIRCULATION PUMP. TIMECLOCK SHALL RUN PUMP DURING OCCUPIED TIMES ONLY. THERMOSTATIC CONTROLS SHALL OPERATE PUMP TO MAINTAIN 105°F IN THE HOT WATER CIRCULATION LINE.

F. COMMISSIONING IS NOT REQUIRED PER WSEC PARAGRAPH C408.1. WATER HEATING SYSTEM IS LESS THAN 200,000 BTU/HR.

G. PROVIDE RECORD DRAWING, OWNERS MANUALS, BALANCING REPORT AND COMMISSIONING REPORT TO OWNER AT COMPLETION OF PROJECT. SEE C103.6 OF THE W.S.E.C.

H. PROVIDE SYSTEMS OPERATIONS TRAINING TO THE BUILDING OWNER PER WSEC PARAGRAPH C103.6.4.

PLUMBING LEGEND

SYMBOL	DESCRIPTION
	WASTE OR SOIL (W)
	VENT (V)
	COLD WATER (CW)
	HOT WATER (HW)
	HOT WATER CIRCULATING (HWC)
F	FIRE LINE
C	CONDENSATE LINE
D	DRAIN LINE
G	GAS LINE
	ISOLATION GATE TYPE VALVE (EXCEPT WHERE INDICATED)
	GLOBE VALVE
	BALL VALVE
	TEMPERING VALVE
	ANGLE VALVE
	COMBINATION SHUT–OFF & BALANCING VALVE
	CHECK VALVE
	BUTTERFLY VALVE
	SOLENOID VALVE
	UNION
	RELIEF VALVE OR SAFETY VALVE
	STRAINER
	CONSTANT FLOW VALVE
	CONCENTRIC REDUCER
	ECCENTRIC REDUCER
	HOSE BIBB
	PIPE / DUCT TURN UP
	PIPE / DUCT TURN DOWN
	PIPE / DUCT POINT OF CONNECTION
P.D.I."A"	WATER HAMMER ARRESTOR (P.D.I. SIZE AS SHOWN)
	PRESSURE GAUGE
	THERMOMETER
T	THERMAL WELL
	PRESSURE TEMPERATURE TEST PORT "PETE'S PLUG"
1 / M3	DETAIL IDENTIFICATION NUMBER SHEET ON WHICH DETAIL IS SHOWN
A / M3	SECTION IDENTIFICATION LETTER SHEET ON WHICH SECTION IS SHOWN

ABBREV.	DESCRIPTION
AFF	ABOVE FINISHED FLOOR
APPROX	APPROXIMATELY
ARCH	ARCHITECTURAL
AUTO	AUTOMATIC
BLDG	BUILDING
BTU	BRITISH THERMAL UNIT
BTUH	BRITISH THERMAL UNIT/HOUR
CAP	CAPACITY
CLG	CEILING
CO	CLEANOUT
COMP	COMPRESSOR
CONN	CONNECTION
CONT	CONTINUE, CONTINUATION
COP	COEFFICIENT OF PERFORMANCE
DB	DRY BULB
DEG F°	DEGREE FAHRENHEIT
DIA, Ø	DIAMETER
DN	DOWN
DWG	DRAWING
(E)	EXISTING
EA	EACH
EFF	EFFICIENCY
ELEC	ELECTRICAL, ELECTRIC
EXIST	EXISTING
FCO	FLOOR CLEAN OUT
FL	FLOOR
FLA	FULL LOAD AMPS
FLEX	FLEXIBLE
FPM	FEET PER MINUTE
GAL	GALLON
GALV.	GALVANIZED
HP	HORSE POWER
I.E.	INVERT ELEVATION
IN	INCH
INTEGR.	INTEGRAL
KW	KILOWATT
LWT	LEAVING WATER TEMPERATURE
MAX	MAXIMUM
MBH	THOUSAND BTUH
MECH	MECHANICAL
MFR	MANUFACTURER
MIN	MINIMUM
NO	NORMALLY OPEN
NO.	NUMBER
NTS	NOT TO SCALE
PD	PRESSURE DROP
P.D.I.	PLUMBING AND DRAINAGE INST.
P.O.C.	POINT OF CONNECTION
REF	REFERENCE
REQ'D	REQUIRED
RLA	RATED LOAD AMPS
RM	ROOM
RPM	REVOLUTIONS PER MINUTE
SCO	SURFACE CLEAN OUT
TEMP	TEMPERATURE
TYP	TYPICAL
UNO	UNLESS OTHERWISE NOTED
V	VOLTS, VOLTAGE
VTR	VENT THROUGH ROOF
W	WATT
W/	WITH
WCO	WALL CLEAN OUT

SHEET INDEX

P–001 – LEGEND & NOTES
P–002 – MAINTENANCE BUILDING SCHEDULES
P–101 – MAINTENANCE BUILDING FOUNDATION PLUMBING PLAN
P–102 – MAINTENANCE BUILDING FIRST FLOOR PLUMBING PLAN
P–501 – PLUMBING DETAILS

PUBLIC IMPROVEMENTS

1001200
PERMIT #

COUNTY ENGINEER — DATE

PIERCE COUNTY ORDINANCE NOs: STORM _____ ROAD _____

1. PRE-CONSTRUCTION MEETING SHALL BE REQUESTED AT LEAST 48-HOURS IN ADVANCE OF THE START OF CONSTRUCTION. CONTACT _____, THE AREA INSPECTOR, AT 253-798-_____.
2. APPOINT A CERTIFIED EROSION AND SEDIMENT CONTROL LEAD WHO SHALL BE PROVIDED A COPY OF THE SWPPP, EROSION CONTROL PLAN & INSPECTION SCHEDULE.
3. FAILURE TO OBTAIN REQUIRED INSPECTIONS MAY ENDANGER OR DELAY PROJECT APPROVAL.
4. ALL WORK IN THE PUBLIC RIGHT-OF-WAY REQUIRES A GENERAL RIGHT-OF-WAY PERMIT FROM PIERCE COUNTY PLANNING AND PUBLIC WORKS.

BID SET

VEACH Consulting Engineers LLC
12202 Pacific Ave. S Suite B Tacoma, WA 98444
Ph: 253-274-5701 Proj# 2032

CAD NO.

NO.	REVISIONS	INT.	APP.	DATE

ACTION	BY	DATE
DESIGNED	VCE	4/30/24
DRAWN	VCE	1/3/25
CHECKED (FIELD)		
CHECKED (HDQTS.)		

REG. A. VEACH — STATE OF WASHINGTON — 34001 — REGISTERED PROFESSIONAL ENGINEER
EXPIRES 8-17-25

REGISTERED STAMP

WASHINGTON STATE PARKS AND RECREATION COMMISSION

NISQUALLY STATE PARK

PHASE 3A MAINTENANCE BUILDING AND WWTF

P-001

LEGEND & NOTES

SCALE: AS NOTED

PARKS FILE#

WATER HEATER SCHEDULE

SYMBOL	SPECIFIED MFR. AND MODEL NO.	TYPE	AREA SERVED	INPUT RATING	STORAGE (GAL)	UEF	DOMESTIC HW			ELECTRICAL		REMARKS
							GPH	EWT	LWT	FLA	VOLTS/PH	
WH–1	RHEEM PROPH50	HYBRID ELECTRIC	MAINTENANCE BUILDING	5000W/ 4200 BTU/H	45	3.55	67	50	140	24.1	240/1	1 2 3

1 NON–SIMULTANEOUS ELEMENTS 2 WITH EXPANSION TANK 3 PROVDE EXHAUST DUCTING TO OUTSIDE IN ACCORDANCE WITH INSTALLATION GUIDE

MISCELLANEOUS EQUIPMENT SCHEDULE

SYMBOL	SIZE	ITEM DESCRIPTION	SPECIFIED MFR. & MODEL NO.	SERVICE	EQUIPMENT CAPACITY	ELECTRICAL		REMARKS
						AMPS	VOLTS/PH	
BFP–3	3/4"ø	REDUCED PRESSURE BACKFLOW PREVENTOR	WATTS LF009	WELCOME CENTER	12 GPM @13 PSI	–	–	
TMV–1	3/4"ø OUTLET	THERMOSTATIC MIXING VALVE	BRADLEY S59–2025	DOMESTIC HOT WATER	7 GPM @8 PSI	–	–	SET TO 115 °F

PIPING INSULATION SCHEDULE

PIPING TYPE	PIPE SIZE	INSULATION TYPE	INSULATION THICKNESS	CONDUCTIVITY RANGE
COLD WATER	ALL	FIBERGLASS	1/2"	–
COLD WATER WITHIN WALLS		NOT REQUIRED – HEAT TRACE PIPE SUBJECT TO FREEZING		–
HOT WATER	1/2" – 1–1/2"	FIBERGLASS	1"	0.22 – 0.28

- ALL PIPING INSULATION SHALL MEET THE REQUIREMENTS OF THE WASHINGTON STATE ENERGY CODE, 2021 EDITION, TABLE C 403.10.3.
- ALL PIPING INSULATION AND COVERINGS SHALL HAVE AN ASTM FLAME SPREAD RATING OF 25 OR LESS AND AN ASTM SMOKE DEVELOPED RATING OF 50 OR LESS.
- ELASTOMERIC INSULATIONS WHICH MEET THESE RATINGS MAY BE USED AS A SUBSTITUTE FOR FIBERGLASS.
- PROVIDE A VAPOR BARRIER COVERING ON ALL COLD WATER PIPING INSULATION.
- PROVIDE A COVERING FOR ALL INSULATION EXPOSED TO SIGHT WITHIN THE BUILDING.
- PROVIDE AN INCOMPRESSIBLE INSULATED PAD WITH A MINIMUM THERMAL RESISTANCE OF R–10 UNDER ALL WATER HEATERS IN UNCONDITIONED SPACES OR ON CONCRETE FLOOR.

PIPING MATERIAL SCHEDULE

PIPING	LOCATION	MATERIAL	JOINT
COLD WATER	ABOVE GROUND	COPPER TYPE L	LEAD FREE SOLDER
		COPPER TYPE L	PROPRESS MECH JOINT
HOT WATER	ABOVE GROUND	COPPER TYPE L	LEAD FREE SOLDER
		COPPER TYPE L	PROPRESS MECH JOINT
WASTE	ALL	CAST IRON	MECHANICAL JOINTS
VENT	ALL	ABS/PVC	GLUE

PLUMBING FIXTURE SCHEDULE

SYMBOL	DESCRIPTION	W	V	CW	HW	REMARKS
P–1C	WATER CLOSET	3"	2"	½"	–	FLOOR MOUNT HANDICAP ACCESIBLE
P–3A	LAVATORY	1 ½"	1 ½"	½"	½"	WALL MOUNT HANDICAP ACCESSIBLE
P–9A	SHOWER	2"	1 ½"	½"	½"	HANDICAP ACCESSIBLE
P–10A	WALL HYDRANT	–	–	½"	–	FREEZE PROOF W/VACUUM BREAKER
P–10B	WALL HYDRANT	–	–	½"	–	W/VACUUM BREAKER
P–11A	FLOOR DRAIN	2"	1 ½"	–	–	W/ TRAP PRIMER
P–12B	CLOTHES WASHER CONNECTION	3"	2"	½"	½"	

PUMP SCHEDULE

SYMBOL	SPECIFIED MFR. AND MODEL NO.	TYPE	SERVICE	GPM	HEAD FT H2O	ELECTRICAL		REMARKS
						MIN. HP	VOLTS/PH	
CP–1	BELL & GOSSETT ECOCIRC 20–18	IN–LINE	DOMESTIC HOT WATER	2	10	1/10	120/1	LEAD FREE

VEACH Consulting Engineers LLC

PLUMBING
Waste / Water / Water Heater Sizing

Project: 2032 Nisqually State Park–Phase 3 Date: 7/6/2023
Area: Maintenance Building By: Lee Shouse

Fixture	Qty	DFU		WSFU			
		Each	Total	Each	Total	CW	HW
Water Closet	1	3	3	2.5	2.5	2.5	0
Lavatory	1	1	1	1	1	0.75	0.75
Clothes Washer	1	3	3	4	4	3	3
Floor Drain	2	0	0	0	0	0	0
Shower	1	2	2	2	2	1.5	1.5
Hose Bib (First)	1	0	0	2.5	2.5	2.5	0
Hose Bib (Add'tl)	2	0	0	1	2	2	0
TOTALS			9		14	12	5

WASTE PIPE SIZE PER UPC: TOTAL 9 DFU = 4 inch
SLOPE 2 %

WATER PIPE SIZE PER UPC: Total 14 WSFU = 12 gpm = 3/4 inch
CW 12 WSFU = 11 gpm = 3/4 inch
HW 5 WSFU = 5 gpm = 3/4 inch

PUBLIC IMPROVEMENTS 1001200 PERMIT #

COUNTY ENGINEER DATE
PIERCE COUNTY ORDINANCE NOs: STORM ROAD

1. PRE-CONSTRUCTION MEETING SHALL BE REQUESTED AT LEAST 48-HOURS IN ADVANCE OF THE START OF CONSTRUCTION. CONTACT , THE AREA INSPECTOR, AT 253-798-.
2. APPOINT A CERTIFIED EROSION AND SEDIMENT CONTROL LEAD WHO SHALL BE PROVIDED A COPY OF THE SWPPP, EROSION CONTROL PLAN & INSPECTION SCHEDULE.
3. FAILURE TO OBTAIN REQUIRED INSPECTIONS MAY ENDANGER OR DELAY PROJECT APPROVAL.
4. ALL WORK IN THE PUBLIC RIGHT-OF-WAY REQUIRES A GENERAL RIGHT-OF-WAY PERMIT FROM PIERCE COUNTY PLANNING AND PUBLIC WORKS.

CAD NO.

NO.	REVISIONS	INT.	APP.	DATE

ACTION	BY	DATE
DESIGNED	VCE	4/30/24
DRAWN	VCE	1/3/25
CHECKED (FIELD)		
CHECKED (HDQTS.)		

REGISTERED STAMP
EXPIRES 8-17-25

WASHINGTON STATE PARKS AND RECREATION COMMISSION

NISQUALLY STATE PARK

PHASE 3A MAINTENANCE BUILDING AND WWTF

P-002
MAINTENANCE BUILDING SCHEDULES

SCALE: AS NOTED

PARKS FILE#

BID SET

VEACH Consulting Engineers LLC
12202 Pacific Ave. S Suite B Tacoma, WA 98444
Ph: 253-274-5701 Proj# 2032

PUBLIC IMPROVEMENTS

1001200
PERMIT #

COUNTY ENGINEER _____ DATE _____

PIERCE COUNTY ORDINANCE NOs: STORM _____ ROAD _____

1. PRE-CONSTRUCTION MEETING SHALL BE REQUESTED AT LEAST 48-HOURS IN ADVANCE OF THE START OF CONSTRUCTION. CONTACT _____, THE AREA INSPECTOR, AT 253-798-_____.
2. APPOINT A CERTIFIED EROSION AND SEDIMENT CONTROL LEAD WHO SHALL BE PROVIDED A COPY OF THE SWPPP, EROSION CONTROL PLAN & INSPECTION SCHEDULE.
3. FAILURE TO OBTAIN REQUIRED INSPECTIONS MAY ENDANGER OR DELAY PROJECT APPROVAL.
4. ALL WORK IN THE PUBLIC RIGHT-OF-WAY REQUIRES A GENERAL RIGHT-OF-WAY PERMIT FROM PIERCE COUNTY PLANNING AND PUBLIC WORKS.

CAD NO.

NO.	REVISIONS	INT.	APP.	DATE

ACTION	BY	DATE
DESIGNED	VCE	4/30/24
DRAWN	VCE	1/3/25
CHECKED (FIELD)		
CHECKED (HDQTS.)		

NOTE: WASTE AND VENT PIPE SIZING PER 2021 UNIFORM PLUMBING CODE CHAPTER 7.

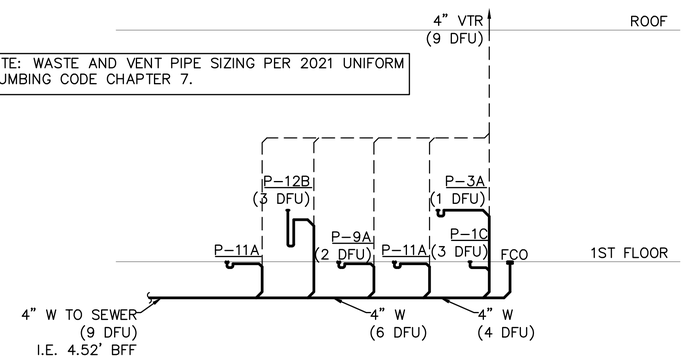

WASTE & VENT RISER DIAGRAM

DRAWING NOTES:

1. ALL PLUMBING INSTALLATION SHALL BE PER 2021 UNIFORM PLUMBING CODE.
2. PROVIDE WALL CLEANOUTS WHERE SHOWN AND AS REQUIRED TO MEET CODE.
3. FOR PIPING SIZES TO INDIVIDUAL PLUMBING FIXTURES SEE PLUMBING FIXTURE SCHEDULE.
4. OFFSET WASTE PIPING AS REQUIRED TO AVOID FOOTINGS, FOUNDATIONS, ELECTRICAL SERVICE, AND OTHER OBSTRUCTIONS. SEE STRUCTURAL AND ELECTRICAL DRAWINGS.
5. INVERT ELEVATIONS SHOWN ARE BASED ON FINISHED FLOOR ELEVATION AND 1/4" PER FOOT SLOPE.
6. ALL ISOLATION VALVES SHALL BE ACCESSIBLE. LOCATE VALVE HANDLES TO TURN FULLY WITHOUT OBSTRUCTION.

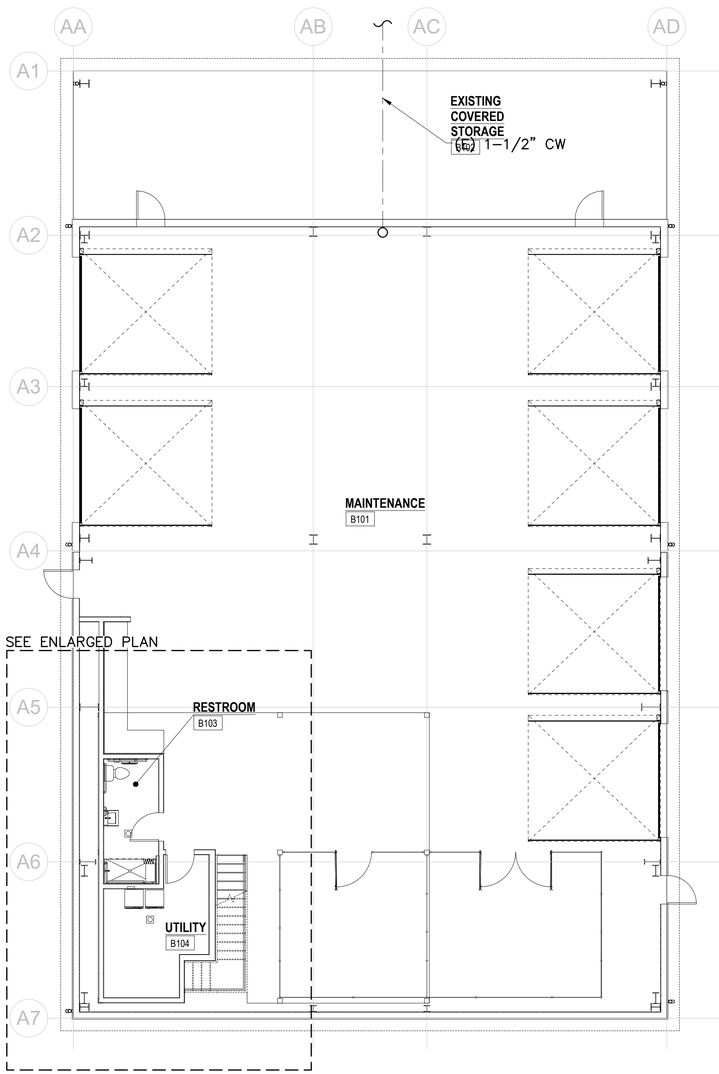

FOUNDATION PLUMBING PLAN

SCALE: 1/8" = 1' – 0"

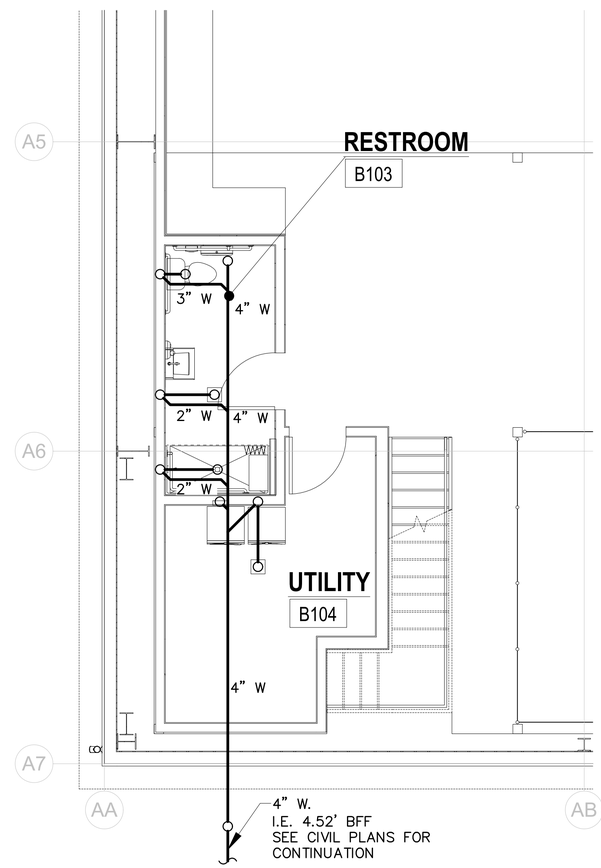

ENLARGED FOUNDATION PLUMBING PLAN

SCALE: 1/4" = 1' – 0"

BID SET

VEACH Consulting Engineers LLC
12202 Pacific Ave. S Suite B Tacoma, WA 98444
Ph: 253-274-5701 Proj# 2032

TED A. VEACH
STATE OF WASHINGTON
34011
REGISTERED
PROFESSIONAL ENGINEER
EXPIRES 8-17-25

REGISTERED STAMP

WASHINGTON STATE PARKS AND RECREATION COMMISSION

NISQUALLY STATE PARK

PHASE 3A MAINTENANCE BUILDING AND WWTF

P-101

MAINTENANCE BUILDING FOUNDATION PLUMBING PLAN

SCALE: AS NOTED

PARKS FILE#

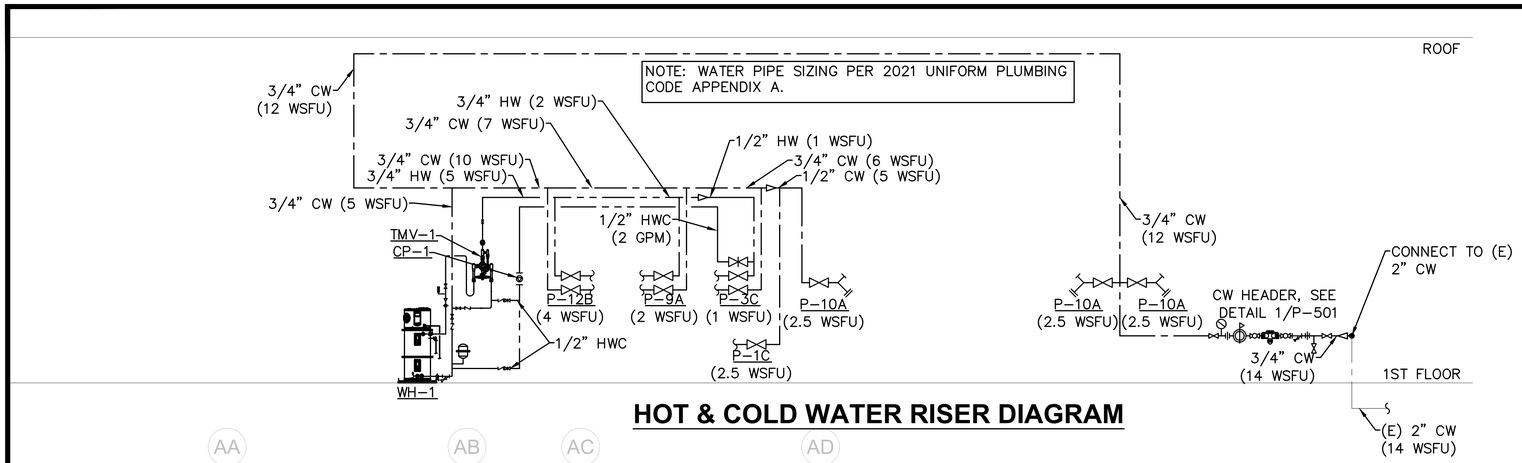

HOT & COLD WATER RISER DIAGRAM

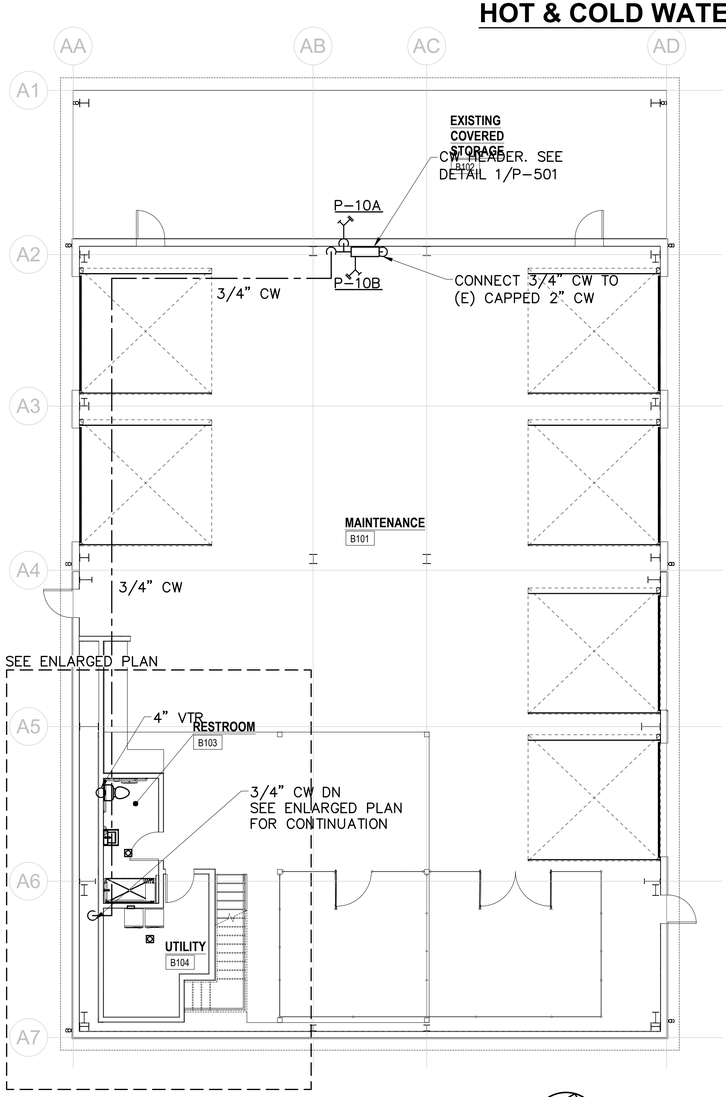

FIRST FLOOR PLUMBING PLAN

SCALE: 1/8" = 1' – 0"

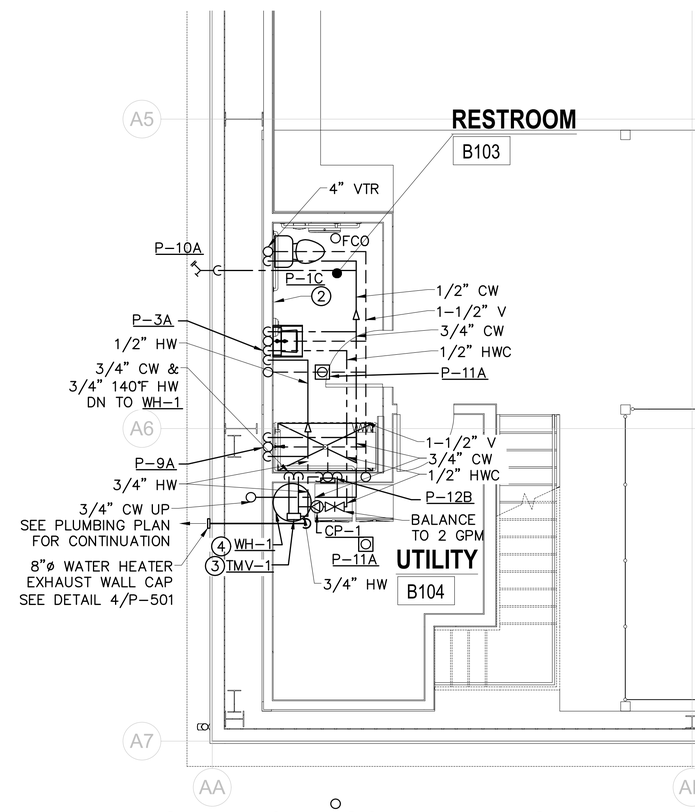

ENLARGED FIRST FLOOR PLUMBING PLAN

SCALE: 1/4" = 1' – 0"

PUBLIC IMPROVEMENTS

1001200
PERMIT #

COUNTY ENGINEER — DATE

PIERCE COUNTY ORDINANCE NOs: STORM _____ ROAD _____

1. PRE-CONSTRUCTION MEETING SHALL BE REQUESTED AT LEAST 48-HOURS IN ADVANCE OF THE START OF CONSTRUCTION. CONTACT _____, THE AREA INSPECTOR, AT 253-798-_____.
2. APPOINT A CERTIFIED EROSION AND SEDIMENT CONTROL LEAD WHO SHALL BE PROVIDED A COPY OF THE SWPPP, EROSION CONTROL PLAN & INSPECTION SCHEDULE.
3. FAILURE TO OBTAIN REQUIRED INSPECTIONS MAY ENDANGER OR DELAY PROJECT APPROVAL.
4. ALL WORK IN THE PUBLIC RIGHT-OF-WAY REQUIRES A GENERAL RIGHT-OF-WAY PERMIT FROM PIERCE COUNTY PLANNING AND PUBLIC WORKS.

DRAWING NOTES:

1. ALL PLUMBING INSTALLATION SHALL BE PER 2021 UNIFORM PLUMBING CODE.
2. PROVIDE WALL CLEANOUTS WHERE SHOWN AND AS REQUIRED TO MEET CODE.
3. FOR PIPING SIZES TO INDIVIDUAL PLUMBING FIXTURES SEE PLUMBING FIXTURE SCHEDULE.
4. OFFSET WASTE PIPING AS REQUIRED TO AVOID FOOTINGS, FOUNDATIONS, ELECTRICAL SERVICE, AND OTHER OBSTRUCTIONS. SEE STRUCTURAL AND ELECTRICAL DRAWINGS.
5. ALL ISOLATION VALVES SHALL BE ACCESSIBLE. LOCATE VALVE HANDLES TO TURN FULLY WITHOUT OBSTRUCTION.
6. PROVIDE HEAT TRACING OF ALL OUTSIDE EXPOSED PIPING.

KEYED NOTES:

1. WALL CLEANOUT BELOW FIXTURE.
2. TRAP PRIMER BEHIND ACCESS DOOR. SEE DETAIL 5/P-501.
3. SEE MIXING VALVE DETAIL 6/P-501.
4. SEE WATER HEATER DETAIL 2/P-501.

BID SET

VEACH Consulting Engineers
12202 Pacific Ave. S Suite B Tacoma, WA 98444
Ph: 253-274-5701 Proj# 2032

SHEET 91 OF 226

CAD NO.

NO.	REVISIONS	INT.	APP.	DATE

ACTION	BY	DATE
DESIGNED	VCE	4/30/24
DRAWN	VCE	1/3/25
CHECKED (FIELD)		
CHECKED (HDQTS.)		

FRED A. VEACH — STATE OF WASHINGTON — 36001 — REGISTERED PROFESSIONAL ENGINEER
EXPIRES 8-17-25

REGISTERED STAMP

WASHINGTON STATE PARKS AND RECREATION COMMISSION

NISQUALLY STATE PARK

PHASE 3A MAINTENANCE BUILDING AND WWTF

P-102

MAINTENANCE BUILDING FIRST FLOOR PLUMBING PLAN

SCALE: AS NOTED

PARKS FILE#

PUBLIC IMPROVEMENTS

1001200
PERMIT #

COUNTY ENGINEER — DATE

PIERCE COUNTY ORDINANCE NOs: STORM _____ ROAD _____

1. PRE-CONSTRUCTION MEETING SHALL BE REQUESTED AT LEAST 48-HOURS IN ADVANCE OF THE START OF CONSTRUCTION. CONTACT _____, THE AREA INSPECTOR, AT 253-798-_____.
2. APPOINT A CERTIFIED EROSION AND SEDIMENT CONTROL LEAD WHO SHALL BE PROVIDED A COPY OF THE SWPPP, EROSION CONTROL PLAN & INSPECTION SCHEDULE.
3. FAILURE TO OBTAIN REQUIRED INSPECTIONS MAY ENDANGER OR DELAY PROJECT APPROVAL.
4. ALL WORK IN THE PUBLIC RIGHT-OF-WAY REQUIRES A GENERAL RIGHT-OF-WAY PERMIT FROM PIERCE COUNTY PLANNING AND PUBLIC WORKS.

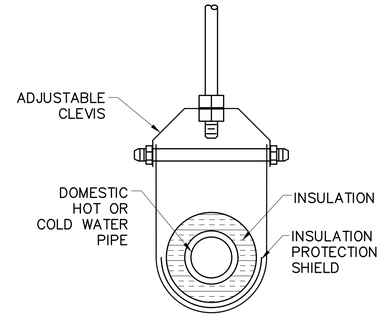

PIPE HANGER SUPPORT (3 / P-501)

NTS

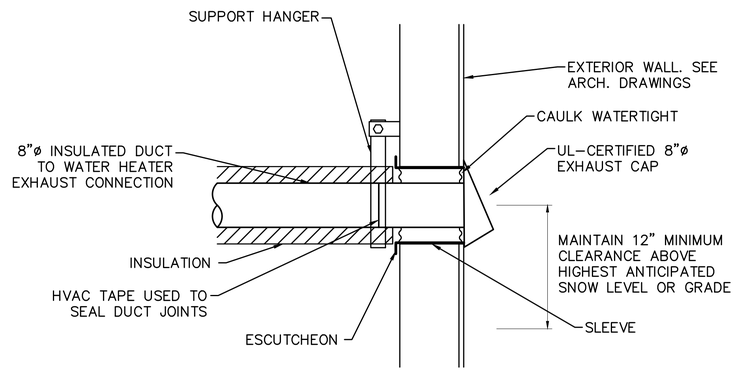

WATER HEATER EXHAUST VENT PENETRATION DETAIL (4 / P-501)

NOT TO SCALE

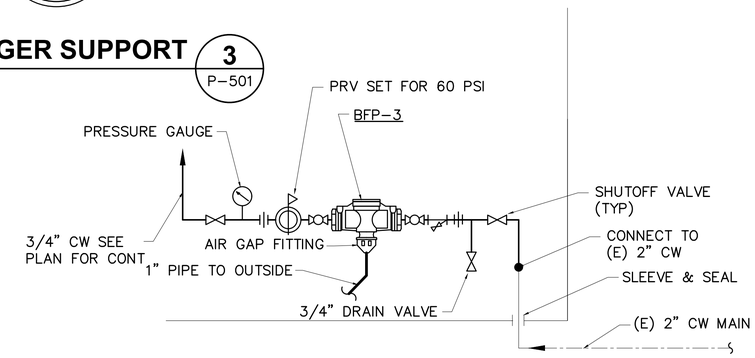

COLD WATER HEADER DETAIL (1 / P-501)

NOT TO SCALE

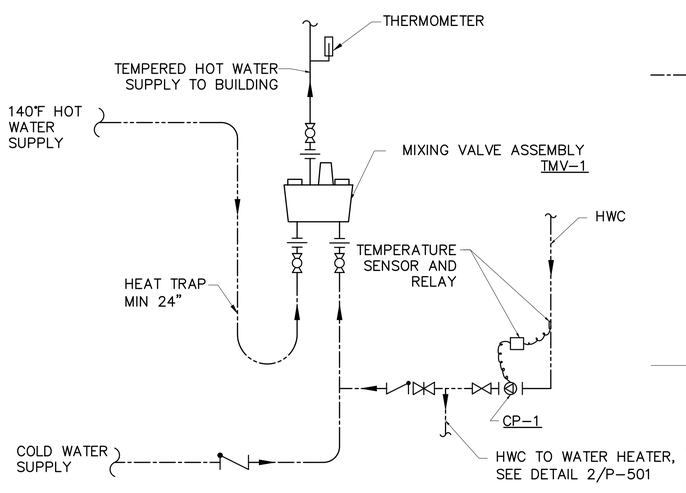

TEMPERING VALVE DETAIL (6 / P-501)

NTS

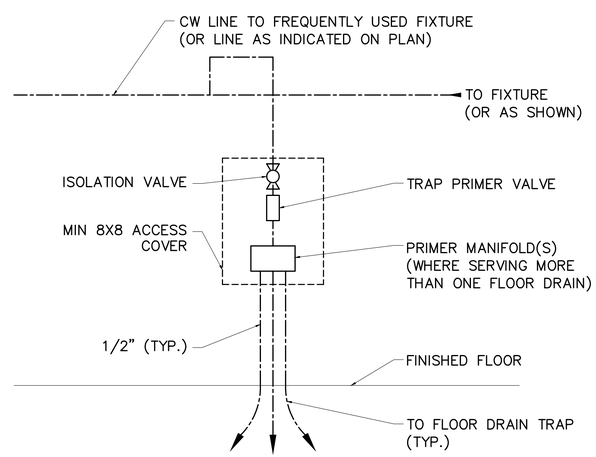

TRAP PRIMER DETAIL (5 / P-501)

NTS

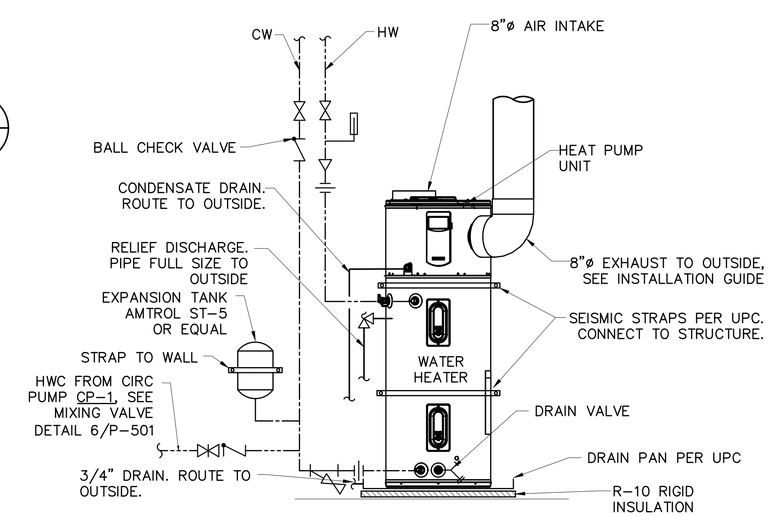

WATER HEATER DETAIL (2 / P-501)

NTS

BID SET

VEACH Consulting Engineers
12202 Pacific Ave. S Suite B Tacoma, WA 98444
Ph: 253-274-5701 Proj# 2032

SHEET 92 OF 226

CAD NO.

NO.	REVISIONS	INT.	APP.	DATE

ACTION	BY	DATE
DESIGNED	VCE	4/30/24
DRAWN	VCE	1/3/25
CHECKED (FIELD)		
CHECKED (HDQTS.)		

FRED A. VEACH — STATE OF WASHINGTON — 36001 — REGISTERED PROFESSIONAL ENGINEER
EXPIRES 8-17-25

REGISTERED STAMP

WASHINGTON STATE PARKS AND RECREATION COMMISSION

NISQUALLY STATE PARK

PHASE 3A MAINTENANCE BUILDING AND WWTF

P-501

DETAILS

SCALE: AS NOTED

PARKS FILE#

A OVERALL UTILITY PLAN
SCALE: 1" = 200'

ABBREVIATIONS

APPROX	APPROXIMATELY
AVE	AVENUE
BLDG	BUILDING
BLVD	BOULEVARD
BO	BLOW-OFF
CB	CATCH BASIN
CO	CLEANOUT
DI	DUCTILE IRON
DIA	DIAMETER
DWG	DRAWING
E	EAST, EASTING
ELEV	ELEVATION
EP	EDGE OF PAVEMENT
EX	EXISTING
FM	FORCE MAIN
FT	FEET
GRVL	GRAVEL
HMN	HUB & MAG NAIL
HORIZ, HORZ	HORIZONTAL
IE	INVERT ELEVATION
LF	LINEAR FEET
MAX	MAXIMUM
MIN	MINIMUM
MN	MAG NAIL
MON	SURVEY MONUMENT
N	NORTH, NORTHING
NC	NORMALLY CLOSED
NE	NORTHEAST
NO	NORMALLY OPEN
NTS	NOT TO SCALE
S	SOUTH, SLOPE
SCH	SCHEDULE
SE	SOUTHEAST
SEC	SECTION
SD	STORM DRAIN
SS	SANITARY SEWER
SSMH	SEWER MANHOLE
ST	STREET
STA	STATION
STD	STANDARD
SW	SOUTHWEST
T	TOWNSHIP
TYP	TYPICAL
W	WEST
W/	WITH
WM	WATER MAIN

LEGEND

EXISTING RIGHT-OF-WAY LINE	
EXISTING RIGHT-OF-WAY CENTERLINE	
PROPOSED WATER MAIN	W
SANITARY SEWER	SS
PRESSURE SEWER FORCE MAIN	FM

WATER PURVEYOR:

WASHINGTON STATE PARKS AND RECREATION COMMISSION
P.O. BOX 42650
OLYMPIA, WA 98504-2650
TEL: (360) 725-9763
CONTACT: BRIAN YEAROUT
EMAIL: BRIAN.YEAROUT@PARKS.WA.GOV

SEWER PURVEYOR:

WASHINGTON STATE PARKS AND RECREATION COMMISSION
P.O. BOX 42650
OLYMPIA, WA 98504-2650
TEL: (360) 725-9763
CONTACT: BRIAN YEAROUT
EMAIL: BRIAN.YEAROUT@PARKS.WA.GOV

BID SET

Call 811 two business days before you dig

SHEET 93 OF 226

CAD NO.

NO.	REVISIONS	INT.	APP.	DATE

ACTION	BY	DATE
DESIGNED	SDS	04/03/2025
DRAWN	SD	04/03/2025
CHECKED (FIELD)		
CHECKED (HDQTS.)		

STEVEN DENNIS SCHMITZ
STATE OF WASHINGTON
48228
REGISTERED PROFESSIONAL ENGINEER
04-03-2025

REGISTERED STAMP

WASHINGTON STATE PARKS AND RECREATION COMMISSION

NISQUALLY STATE PARK

PHASE 3A MAINTENANCE BUILDING AND WWTF OVERALL UTILITY PLAN

C3.0

SCALE
0 SCALE IN FEET 200 400

PARKS FILE#

I:\2019\10181900030 – Nisqually State Park\CADD\DWG\PHASE 3\C3.0 THRU C3.11 – UTILITY PLAN & PROFILES.dwg
Apr-09-25 10:04am

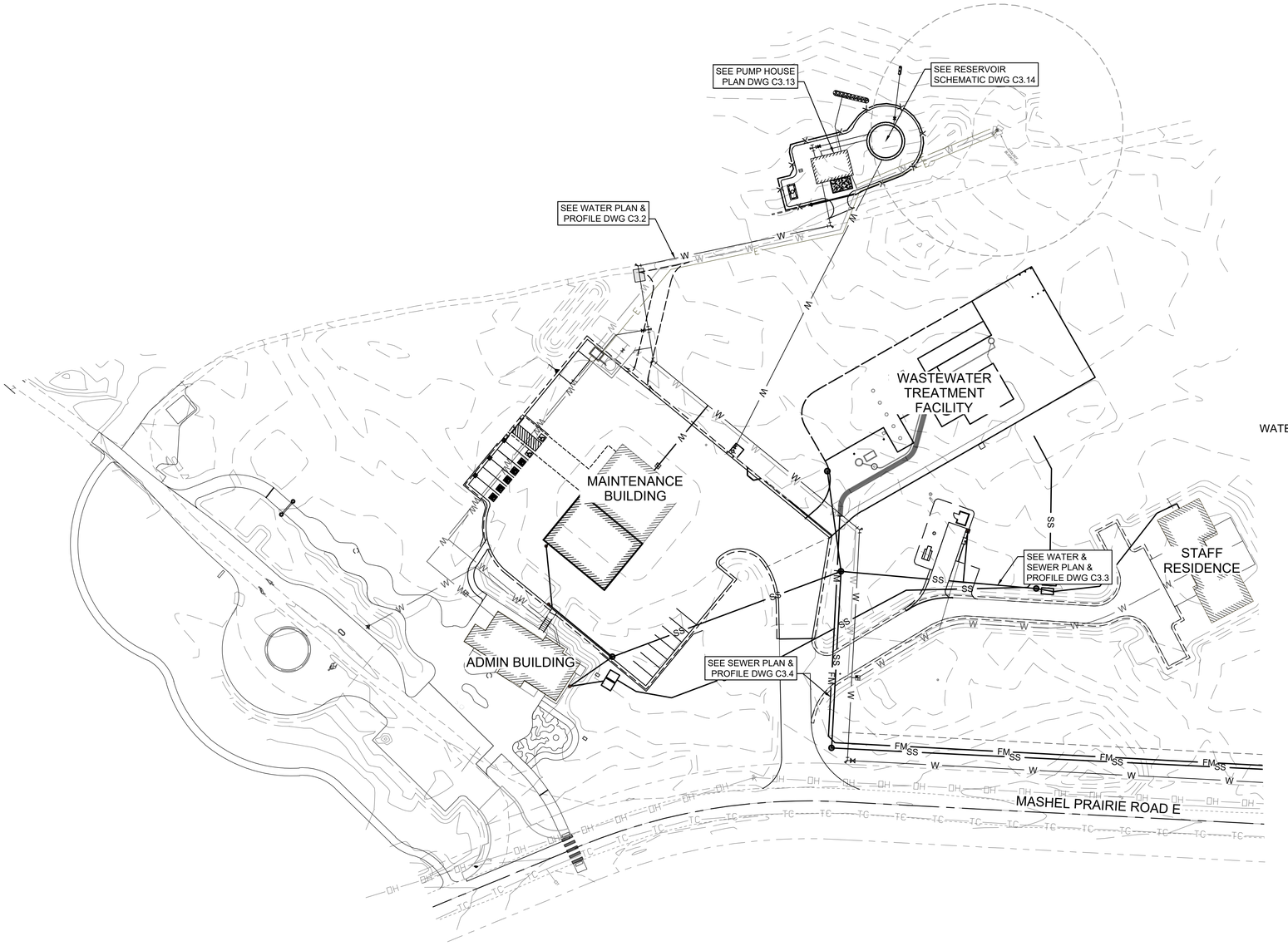

A MAINTENANCE AREA UTILITY PLAN
SCALE: 1" = 50'

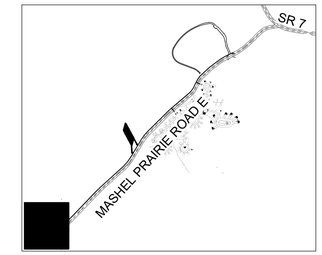

KEY MAP
N.T.S.

LEGEND

ROADWAY CENTERLINE	
WATER LINE	W
WATER SERVICE LINE	
WATER BEND W/ THRUST BLOCKING (ANGLES VARY)	
WATER TEE W/ THRUST BLOCKING	
FIRE HYDRANT	
WATER CAP W/ THRUST BLOCKING	
WATER METER	
WATER GATE VALVE	
WATER BLOWOFF	
SEWER LINE	SS
SEWER MANHOLE	
SEWER CLEANOUT	
SEWER FORCE MAIN	FM
RIGHT OF WAY	

BID SET

Call 811 two business days before you dig

SHEET 94 OF 226

CAD NO.

NO.	REVISIONS	INT.	APP.	DATE

ACTION	BY	DATE
DESIGNED	SDS	04/03/2025
DRAWN	SD	04/03/2025
CHECKED (FIELD)		
CHECKED (HDQTS.)		

STEVEN DENNIS SCHMITZ
STATE OF WASHINGTON
48228
REGISTERED PROFESSIONAL ENGINEER
04-03-2025

REGISTERED STAMP

WASHINGTON STATE PARKS AND RECREATION COMMISSION

NISQUALLY STATE PARK

PHASE 3A MAINTENANCE BUILDING AND WWTF MAINTENANCE AREA UTILITY PLAN

C3.1

SCALE
0 50 100
SCALE IN FEET

PARKS FILE#

I:\2019\1018190030 - Nisqually State Park\CADD\DWG\PHASE 3\C3.0 THRU C3.11 - UTILITY PLAN & PROFILES.dwg
Apr-09-25 10:05am

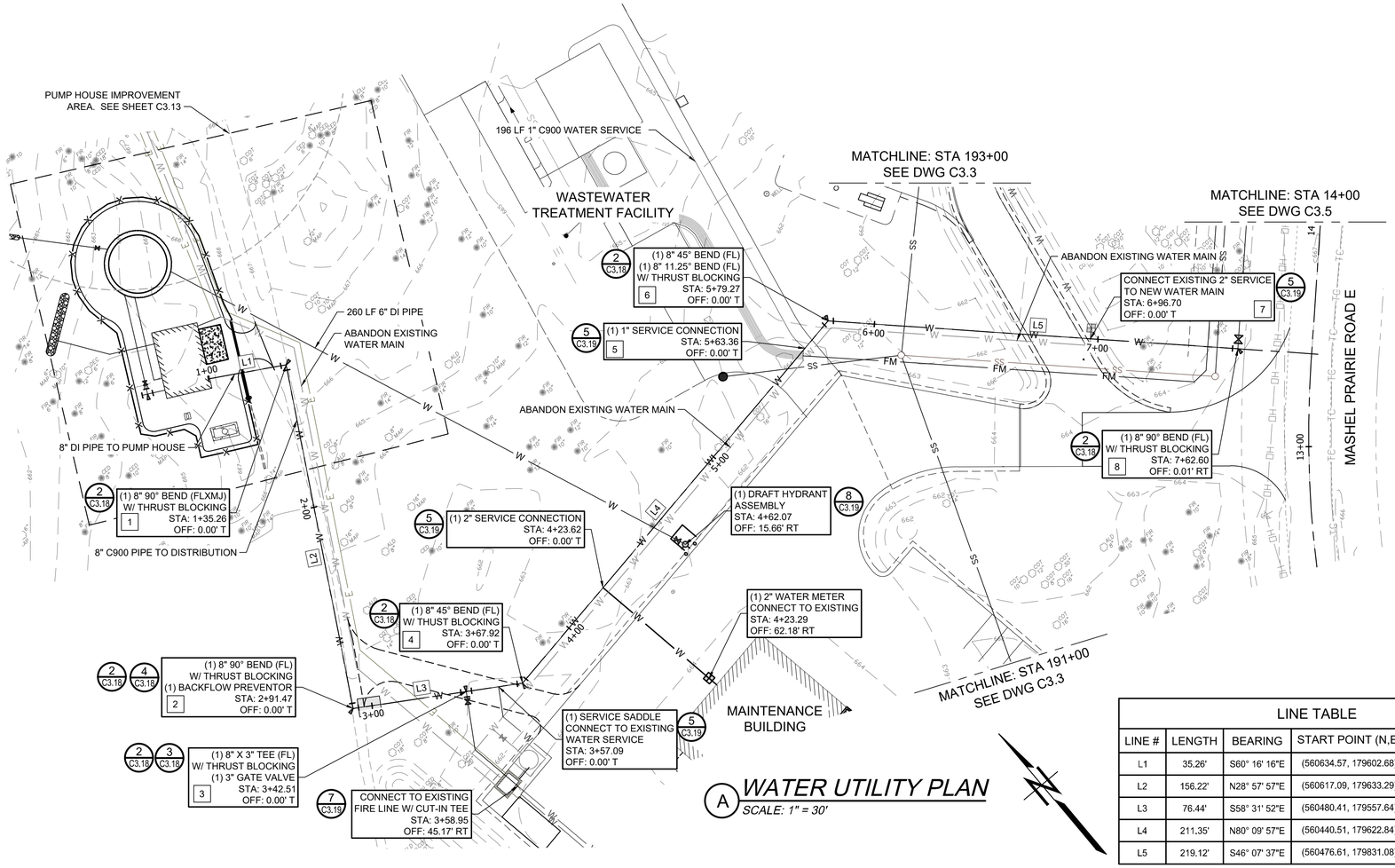

A WATER UTILITY PLAN
SCALE: 1" = 30'

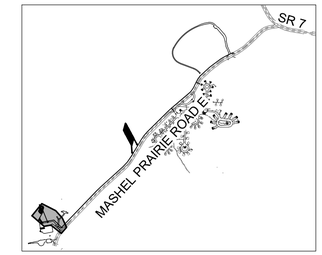

KEY MAP
N.T.S.

LEGEND

ROADWAY CENTERLINE	
WATER LINE	W
WATER SERVICE LINE	
WATER BEND W/ THRUST BLOCKING (ANGLES VARY)	
WATER TEE W/ THRUST BLOCKING	
FIRE HYDRANT	
WATER CAP W/ THRUST BLOCKING	
WATER METER	
WATER GATE VALVE	
WATER BLOWOFF	
SEWER LINE	SS
SEWER MANHOLE	
SEWER CLEANOUT	
SEWER FORCE MAIN	FM
RIGHT OF WAY	

LINE TABLE

LINE #	LENGTH	BEARING	START POINT (N,E)	END POINT (N,E)
L1	35.26'	S60° 16' 16"E	(560634.57, 179602.68)	(560617.09, 179633.29)
L2	156.22'	N28° 57' 57"E	(560617.09, 179633.29)	(560480.41, 179557.64)
L3	76.44'	S58° 31' 52"E	(560480.41, 179557.64)	(560440.51, 179622.84)
L4	211.35'	N80° 09' 57"E	(560440.51, 179622.84)	(560476.61, 179831.08)
L5	219.12'	S46° 07' 37"E	(560476.61, 179831.08)	(560324.74, 179989.04)

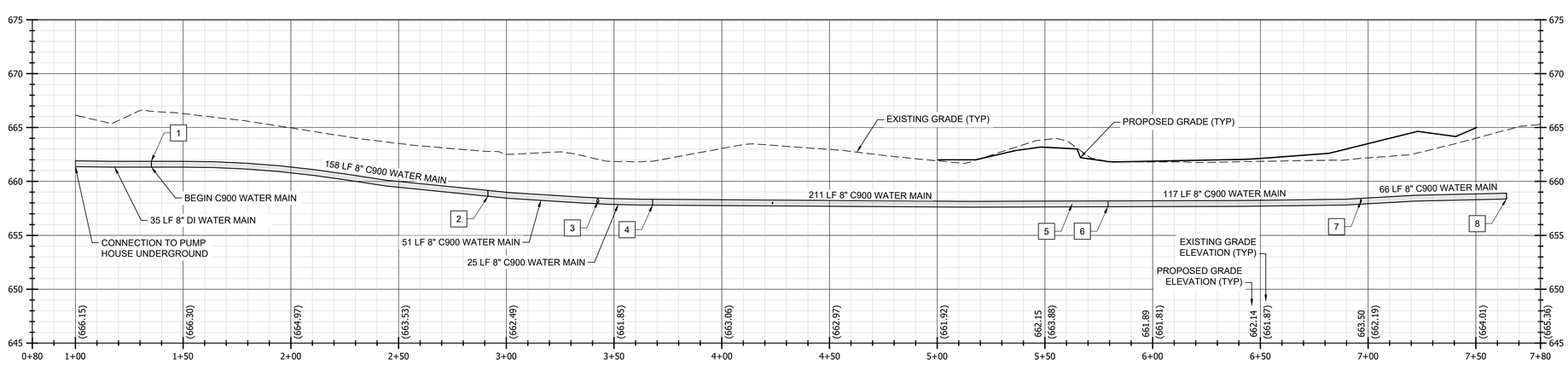

A WATER UTILITY PROFILE
HORZ. SCALE: 1" = 30' - VERT. SCALE: 1" = 6'

NOTES:

WATER MAIN STANDARD TRENCHING PER DETAIL 1 ON DWG C3.18.

GRAVITY SEWER MAIN STANDARD TRENCHING PER DETAIL 1 ON DWG C3.20.

PRESSURE SEWER MAIN STANDARD TRENCHING PER DETAIL 5 ON DWG C1.5.

Call 811 two business days before you dig

SHEET 95 OF 226

BID SET

CAD NO.

NO.	REVISIONS	INT.	APP.	DATE

ACTION	BY	DATE
DESIGNED	SDS	04/03/2025
DRAWN	SD	04/03/2025
CHECKED (FIELD)		
CHECKED (HDQTS.)		

STEVEN DENNIS SCHMITZ — STATE OF WASHINGTON — 48228 — REGISTERED PROFESSIONAL ENGINEER
04-03-2025
REGISTERED STAMP

WASHINGTON STATE PARKS AND RECREATION COMMISSION

NISQUALLY STATE PARK

PHASE 3A MAINTENANCE BUILDING AND WWTF WATER PLAN & PROFILE

C3.2

SCALE 0 30 60 SCALE IN FEET

PARKS FILE#

I:\2019\10181900030 – Nisqually State Park\CADD\DWG\PHASE 3\C3.0 THRU C3.11 – UTILITY PLAN & PROFILES.dwg
Apr-09-25 10:07am

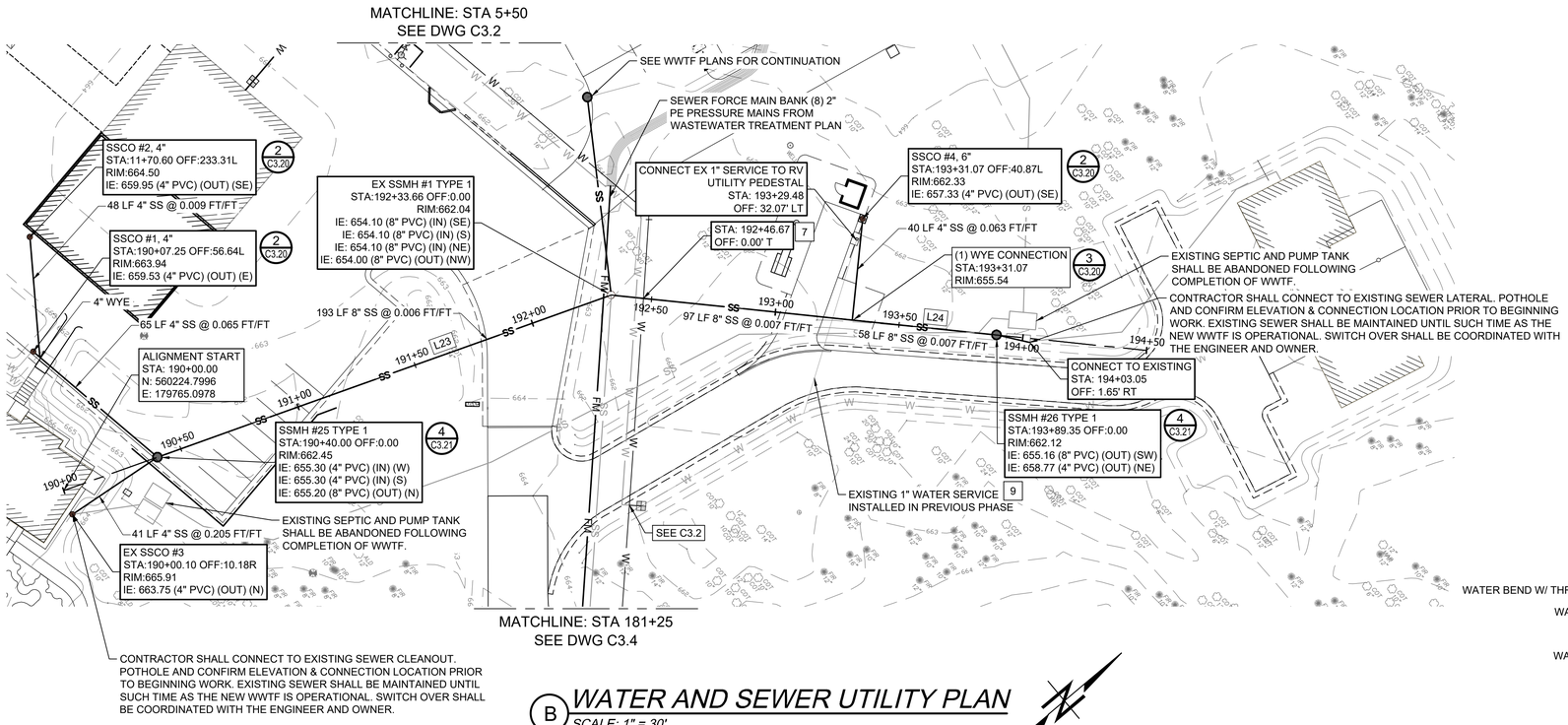

B WATER AND SEWER UTILITY PLAN

SCALE: 1" = 30'

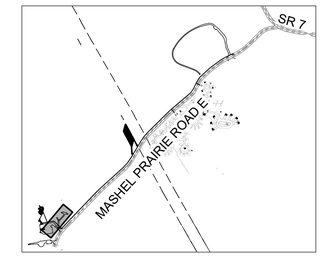

KEY MAP

N.T.S.

LEGEND

ROADWAY CENTERLINE	
WATER LINE	W
WATER SERVICE LINE	
WATER BEND W/ THRUST BLOCKING (ANGLES VARY)	
WATER TEE W/ THRUST BLOCKING	
FIRE HYDRANT	
WATER CAP W/ THRUST BLOCKING	
WATER METER	
WATER GATE VALVE	
WATER BLOWOFF	
SEWER LINE	SS
SEWER MANHOLE	
SEWER CLEANOUT	
SEWER FORCE MAIN	FM
RIGHT OF WAY	

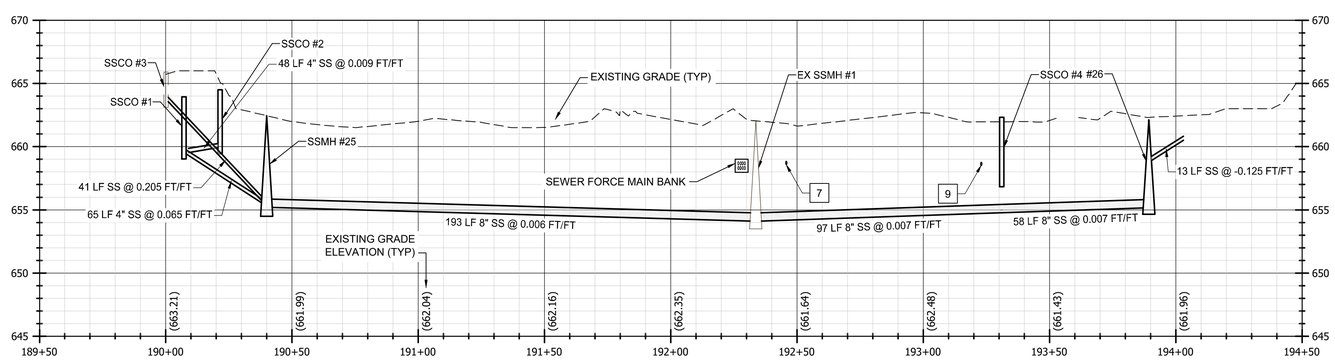

B WATER AND SEWER UTILITY PROFILE

HORZ. SCALE: 1" = 30' - VERT. SCALE: 1" = 6'

LINE TABLE				
LINE #	LENGTH	BEARING	START POINT (N,E)	END POINT (N,E)
L23	233.66'	N20° 21' 13"E	(560224.80, 179765.10)	(560443.87, 179846.37)
L24	216.34'	N45° 54' 07"E	(560443.87, 179846.37)	(560594.42, 180001.73)

NOTES:

WATER MAIN STANDARD TRENCHING PER DETAIL 1 ON DWG C3.18.

GRAVITY SEWER MAIN STANDARD TRENCHING PER DETAIL 1 ON DWG C3.20.

PRESSURE SEWER MAIN STANDARD TRENCHING PER DETAIL 5 ON DWG C1.5.

Call 811 two business days before you dig

SHEET 96 OF 226

BID SET

CAD NO.

NO.	REVISIONS	INT.	APP.	DATE

ACTION	BY	DATE
DESIGNED	SDS	04/03/2025
DRAWN	SD	04/03/2025
CHECKED (FIELD)		
CHECKED (HDQTS.)		

STEVEN DENNIS SCHMITZ — STATE OF WASHINGTON — 48228 — REGISTERED PROFESSIONAL ENGINEER — 04-03-2025

REGISTERED STAMP

WASHINGTON STATE PARKS AND RECREATION COMMISSION

NISQUALLY STATE PARK

PHASE 3A MAINTENANCE BUILDING AND WWTF WATER & SEWER PLAN & PROFILE

C3.3

SCALE 0 30 60 SCALE IN FEET

PARKS FILE#

I:\2019\1018190030 - Nisqually State Park\CADD\DWG\PHASE 3\C3.0 THRU C3.11 - UTILITY PLAN & PROFILES.dwg
Apr-09-25 10:08am

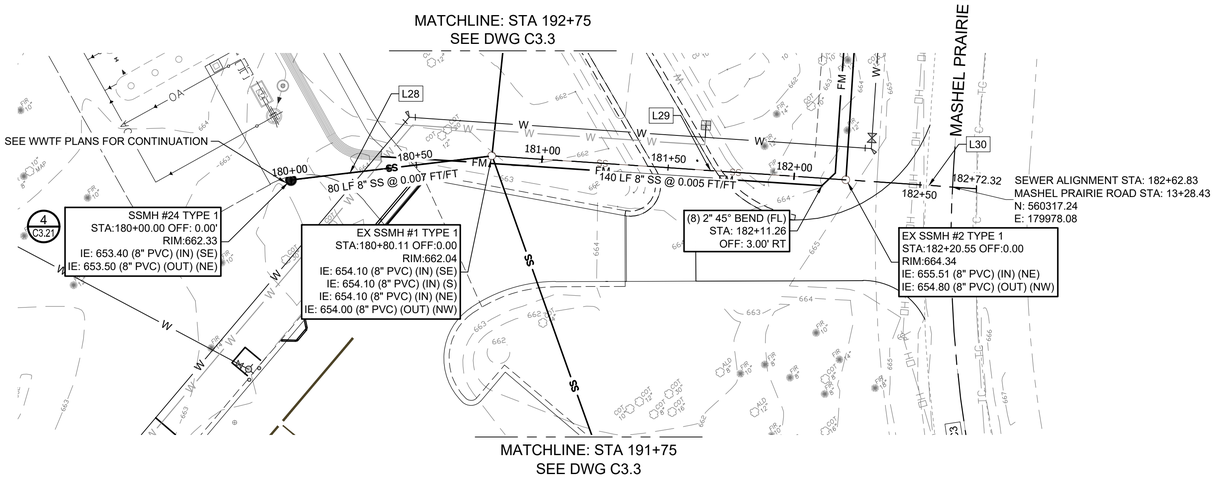

(C) SEWER UTILITY PLAN

SCALE: 1" = 30'

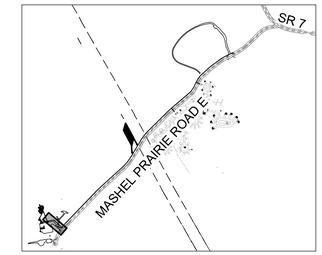

KEY MAP

N.T.S.

LEGEND

ROADWAY CENTERLINE	
WATER LINE	W
WATER SERVICE LINE	
WATER BEND W/ THRUST BLOCKING (ANGLES VARY)	
WATER TEE W/ THRUST BLOCKING	
FIRE HYDRANT	
WATER CAP W/ THRUST BLOCKING	
WATER METER	
WATER GATE VALVE	
WATER BLOWOFF	
SEWER LINE	SS
SEWER MANHOLE	
SEWER CLEANOUT	
SEWER FORCE MAIN	FM
RIGHT OF WAY	

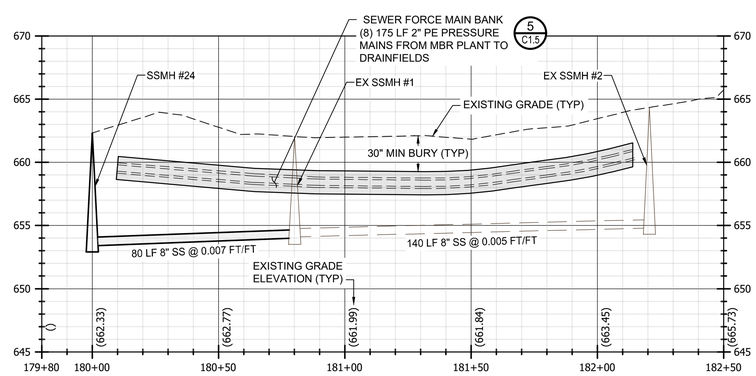

(C) SEWER UTILITY PROFILE

HORZ. SCALE: 1" = 30' - VERT. SCALE: 1" = 6'

LINE TABLE				
LINE #	LENGTH	BEARING	START POINT (N,E)	END POINT (N,E)
L28	80.11'	S56° 52' 05"E	(560487.66, 179779.28)	(560443.87, 179846.37)
L29	140.35'	S46° 07' 37"E	(560443.87, 179846.37)	(560346.61, 179947.54)
L30	51.86'	S46° 07' 37"E	(560346.61, 179947.54)	(560310.66, 179984.93)

BID SET

NOTES:

WATER MAIN STANDARD TRENCHING PER DETAIL 1 ON DWG C3.18.

GRAVITY SEWER MAIN STANDARD TRENCHING PER DETAIL 1 ON DWG C3.20.

PRESSURE SEWER MAIN STANDARD TRENCHING PER DETAIL 5 ON DWG C3.20.

Call 811 two business days before you dig

SHEET 97 OF 226

CAD NO.

NO.	REVISIONS	INT.	APP.	DATE

ACTION	BY	DATE
DESIGNED	SDS	04/03/2025
DRAWN	SD	04/03/2025
CHECKED (FIELD)		
CHECKED (HDQTS.)		

STEVEN DENNIS SCHMITZ
STATE OF WASHINGTON
48228
REGISTERED PROFESSIONAL ENGINEER
04-03-2025

REGISTERED STAMP

WASHINGTON STATE PARKS AND RECREATION COMMISSION

NISQUALLY STATE PARK

PHASE 3A MAINTENANCE BUILDING AND WWTF SEWER PLAN & PROFILE

C3.4

SCALE 0 30 60 SCALE IN FEET

PARKS FILE#

I:\2019\1018190030 - Nisqually State Park\CADD\DWG\PHASE 3\C3.0 THRU C3.11 - UTILITY PLAN & PROFILES.dwg
Apr-09-25 10:10am

CURVE TABLE					
CURVE #	RADIUS	LENGTH	Δ DELTA	START POINT (N,E)	END POINT (N,E)
C3	475.00'	211.42'	025°30'09"	(560,144.17,179,875.77)	(560,323.67,179,984.14)

LINE TABLE				
LINE #	LENGTH	BEARING	START POINT (N,E)	END POINT (N,E)
L8	888.86'	N43° 52' 22"E	(560323.67, 179984.14)	(560964.43, 180600.18)

LEGEND

- ROADWAY CENTERLINE
- WATER LINE — W
- WATER SERVICE LINE
- WATER BEND W/ THRUST BLOCKING (ANGLES VARY)
- WATER TEE W/ THRUST BLOCKING
- FIRE HYDRANT
- WATER CAP W/ THRUST BLOCKING
- WATER METER
- WATER GATE VALVE
- WATER BLOWOFF
- SEWER LINE — SS
- SEWER MANHOLE
- SEWER CLEANOUT
- SEWER FORCE MAIN — FM
- RIGHT OF WAY

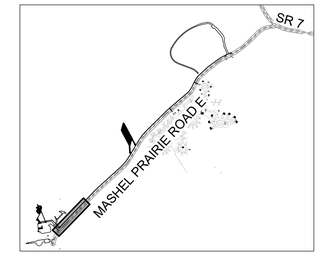

KEY MAP
N.T.S.

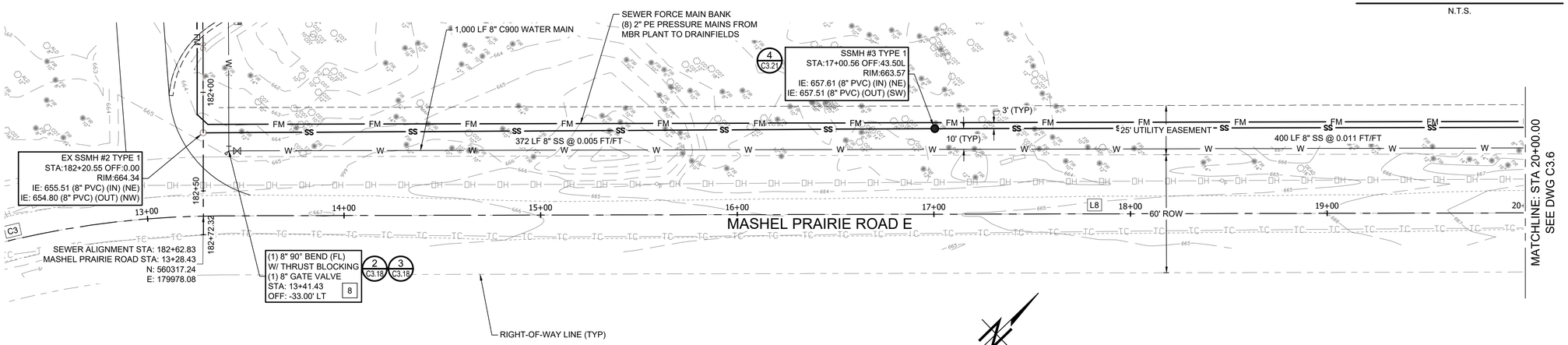

D WATER & SEWER UTILITY PLAN

SCALE: 1" = 30'

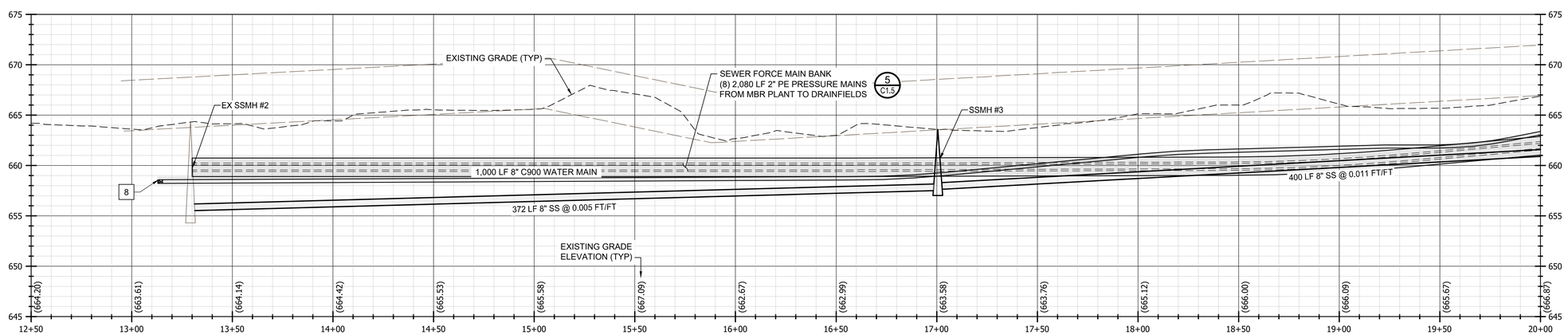

D WATER & SEWER UTILITY PROFILE

HORZ. SCALE: 1" = 30' - VERT. SCALE: 1" = 6'

NOTES:

WATER MAIN STANDARD TRENCHING PER DETAIL 1 ON DWG C3.18.

GRAVITY SEWER MAIN STANDARD TRENCHING PER DETAIL 1 ON DWG C3.20.

PRESSURE SEWER MAIN STANDARD TRENCHING PER DETAIL 5 ON DWG C1.5.

Call 811 two business days before you dig

SHEET 98 OF 226

BID SET

CAD NO.

NO.	REVISIONS	INT.	APP.	DATE

ACTION	BY	DATE
DESIGNED	SDS	04/03/2025
DRAWN	SD	04/03/2025
CHECKED (FIELD)		
CHECKED (HDQTS.)		

STEVEN DENNIS SCHMITZ — STATE OF WASHINGTON — 48228 — REGISTERED PROFESSIONAL ENGINEER — 04-03-2025

REGISTERED STAMP

WASHINGTON STATE PARKS AND RECREATION COMMISSION

NISQUALLY STATE PARK

PHASE 3A MAINTENANCE BUILDING AND WWTF WATER & SEWER PLAN & PROFILE

C3.5

SCALE 0 30 60 SCALE IN FEET

PARKS FILE#

I:\2019\1018190030 - Nisqually State Park\CADD\DWG\PHASE 3\C3.0 THRU C3.11 - UTILITY PLAN & PROFILES.dwg
Apr-09-25 10:11am

CURVE TABLE					
CURVE #	RADIUS	LENGTH	Δ DELTA	START POINT (N,E)	END POINT (N,E)
C4	1,500.00'	101.22'	003°51'58"	(560,964.43,180,600.18)	(561,034.98,180,672.73)

LINE TABLE				
LINE #	LENGTH	BEARING	START POINT (N,E)	END POINT (N,E)
L9	525.98'	N47° 44' 20"E	(561034.98, 180672.73)	(561388.70, 181062.01)

LEGEND

- ROADWAY CENTERLINE
- WATER LINE — W
- WATER SERVICE LINE
- WATER BEND W/ THRUST BLOCKING (ANGLES VARY)
- WATER TEE W/ THRUST BLOCKING
- FIRE HYDRANT
- WATER CAP W/ THRUST BLOCKING
- WATER METER
- WATER GATE VALVE
- WATER BLOWOFF
- SEWER LINE — SS
- SEWER MANHOLE
- SEWER CLEANOUT
- SEWER FORCE MAIN — FM
- RIGHT OF WAY

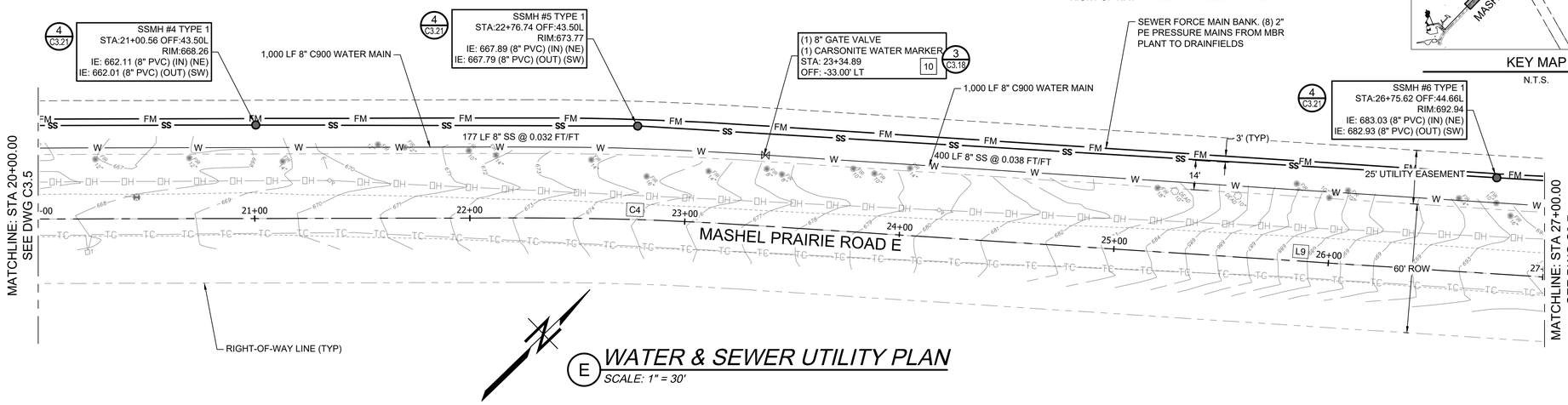

E WATER & SEWER UTILITY PLAN

SCALE: 1" = 30'

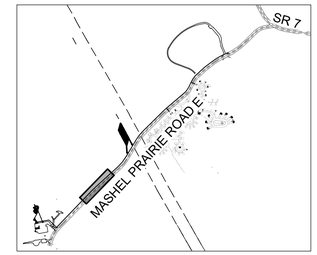

KEY MAP

N.T.S.

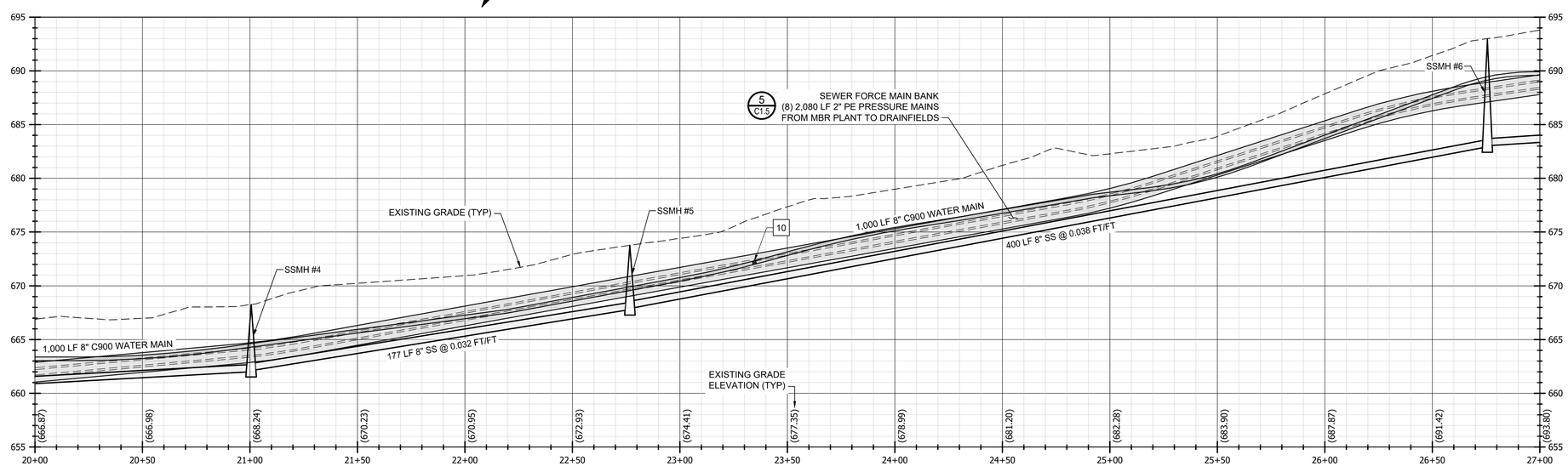

E WATER & SEWER UTILITY PROFILE

HORZ. SCALE: 1" = 30' - VERT. SCALE: 1" = 6'

NOTES:

WATER MAIN STANDARD TRENCHING PER DETAIL 1 ON DWG C3.18.

GRAVITY SEWER MAIN STANDARD TRENCHING PER DETAIL 1 ON DWG C3.20.

PRESSURE SEWER MAIN STANDARD TRENCHING PER DETAIL 5 ON DWG C1.5.

Call 811 two business days before you dig

SHEET 99 OF 226

BID SET

CAD NO.

NO.	REVISIONS	INT.	APP.	DATE

ACTION	BY	DATE
DESIGNED	SDS	04/03/2025
DRAWN	SD	04/03/2025
CHECKED (FIELD)		
CHECKED (HDQTS.)		

STEVEN DENNIS SCHMITZ — STATE OF WASHINGTON — 48228 — REGISTERED PROFESSIONAL ENGINEER

04-03-2025

REGISTERED STAMP

WASHINGTON STATE PARKS AND RECREATION COMMISSION

NISQUALLY STATE PARK

PHASE 3A MAINTENANCE BUILDING AND WWTF WATER & SEWER PLAN & PROFILE

C3.6

SCALE 0 30 60 SCALE IN FEET

PARKS FILE#

I:\2019\10181900030 - Nisqually State Park\CADD\DWG\PHASE 3\C3.0 THRU C3.11 - UTILITY PLAN & PROFILES.dwg
Apr-09-25 10:13am

CURVE TABLE					
CURVE #	RADIUS	LENGTH	Δ DELTA	START POINT (N,E)	END POINT (N,E)
C5	800.00'	240.48'	017°13'22"	(561,388.70,181,062.01)	(561,574.55,181,213.19)

LINE TABLE				
LINE #	LENGTH	BEARING	START POINT (N,E)	END POINT (N,E)
L10	337.56'	N30° 30' 58"E	(561574.55, 181213.19)	(561865.35, 181384.59)

LEGEND

- ROADWAY CENTERLINE
- WATER LINE — W
- WATER SERVICE LINE
- WATER BEND W/ THRUST BLOCKING (ANGLES VARY)
- WATER TEE W/ THRUST BLOCKING
- FIRE HYDRANT
- WATER CAP W/ THRUST BLOCKING
- WATER METER
- WATER GATE VALVE
- WATER BLOWOFF
- SEWER LINE — SS
- SEWER MANHOLE
- SEWER CLEANOUT
- SEWER FORCE MAIN — FM
- RIGHT OF WAY

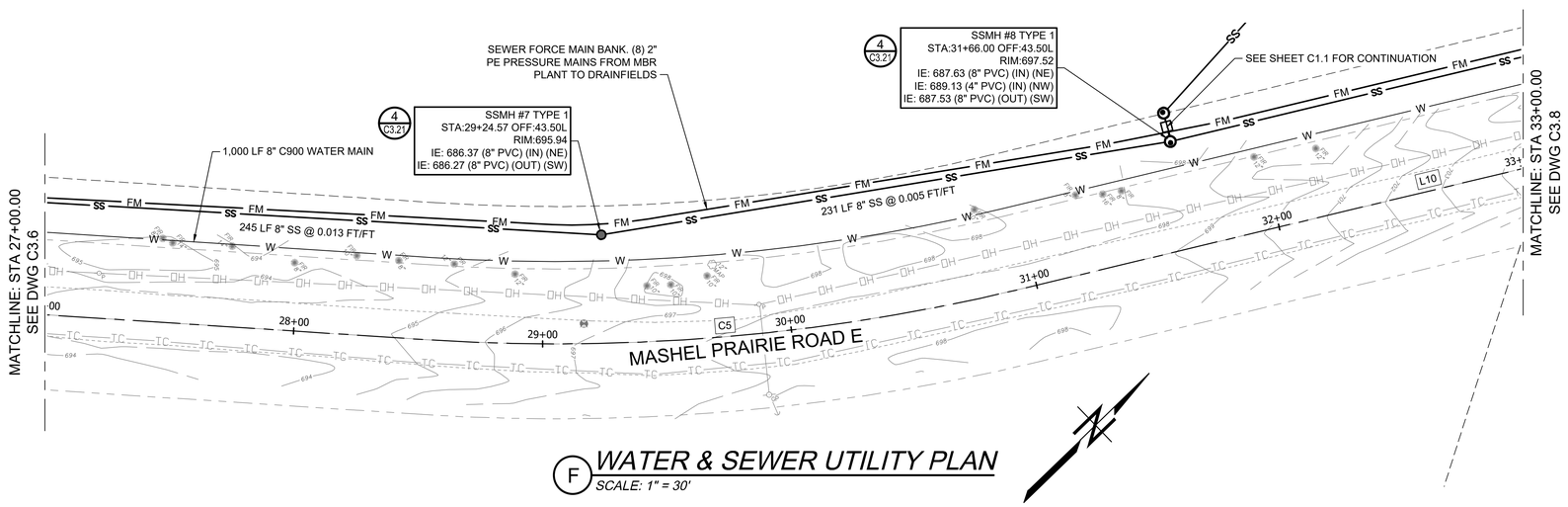

F WATER & SEWER UTILITY PLAN
SCALE: 1" = 30'

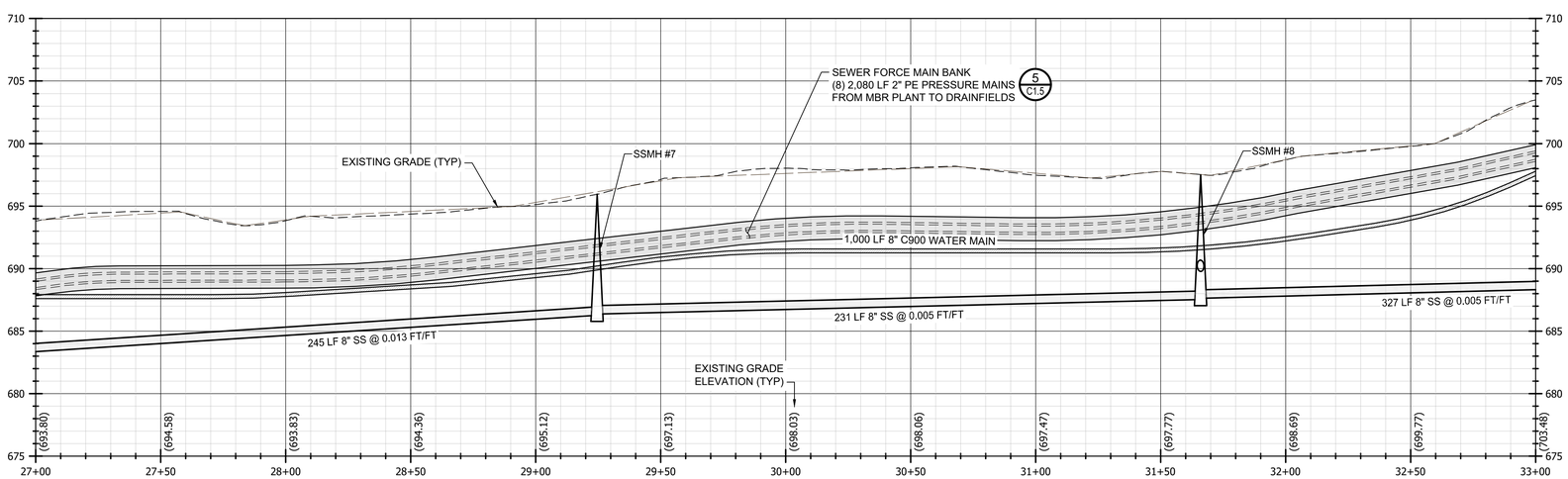

F WATER & SEWER UTILITY PROFILE
HORZ. SCALE: 1" = 30' - VERT. SCALE: 1" = 6'

NOTES:

WATER MAIN STANDARD TRENCHING PER DETAIL 1 ON DWG C3.18.

GRAVITY SEWER MAIN STANDARD TRENCHING PER DETAIL 1 ON DWG C3.20.

PRESSURE SEWER MAIN STANDARD TRENCHING PER DETAIL 5 ON DWG C1.5.

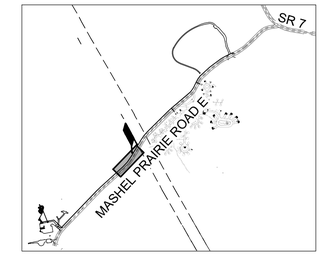

KEY MAP
N.T.S.

BID SET

Call 811 two business days before you dig

SHEET 100 OF 226

CAD NO.

NO.	REVISIONS	INT.	APP.	DATE

ACTION	BY	DATE
DESIGNED	SDS	04/03/2025
DRAWN	SD	04/03/2025
CHECKED (FIELD)		
CHECKED (HDQTS.)		

STEVEN DENNIS SCHMITZ — STATE OF WASHINGTON — 48228 — REGISTERED PROFESSIONAL ENGINEER — 04-03-2025

REGISTERED STAMP

WASHINGTON STATE PARKS AND RECREATION COMMISSION

NISQUALLY STATE PARK

PHASE 3A MAINTENANCE BUILDING AND WWTF WATER & SEWER PLAN & PROFILE

C3.7

SCALE 0 30 60 SCALE IN FEET

PARKS FILE#

I:\2019\1018190030 - Nisqually State Park\CADD\DWG\PHASE 3\C3.0 THRU C3.11 - UTILITY PLAN & PROFILES.dwg
Apr-09-25 10:14am

CURVE TABLE					
CURVE #	RADIUS	LENGTH	Δ DELTA	START POINT (N,E)	END POINT (N,E)
C6	700.00'	179.64'	014°42'15"	(561,865.35,181,384.59)	(562,006.78,181,494.57)

LINE TABLE				
LINE #	LENGTH	BEARING	START POINT (N,E)	END POINT (N,E)
L11	518.61'	N45° 13' 13"E	(562006.78, 181494.57)	(562372.08, 181862.69)

LEGEND

- ROADWAY CENTERLINE
- WATER LINE — W
- WATER SERVICE LINE
- WATER BEND W/ THRUST BLOCKING (ANGLES VARY)
- WATER TEE W/ THRUST BLOCKING
- FIRE HYDRANT
- WATER CAP W/ THRUST BLOCKING
- WATER METER
- WATER GATE VALVE
- WATER BLOWOFF
- SEWER LINE — SS
- SEWER MANHOLE
- SEWER CLEANOUT
- SEWER FORCE MAIN — FM
- RIGHT OF WAY
- UTILITY PIPE MARKERS

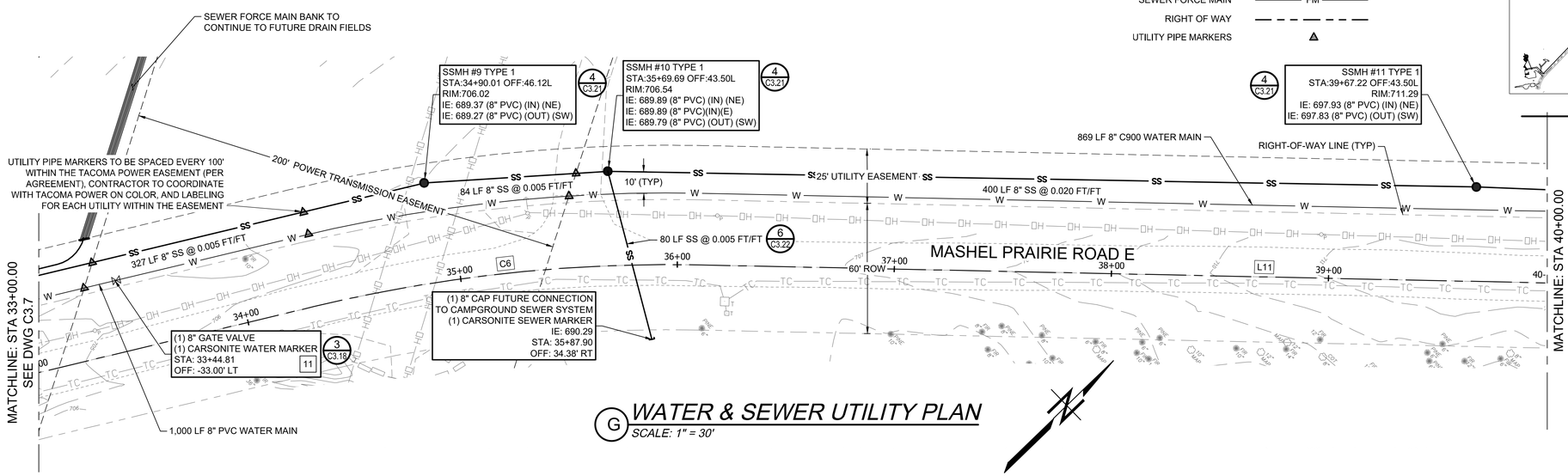

G WATER & SEWER UTILITY PLAN
SCALE: 1" = 30'

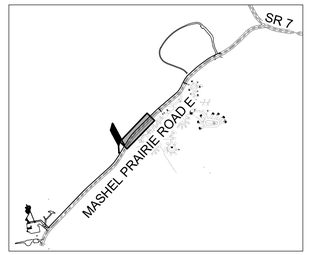

KEY MAP
N.T.S.

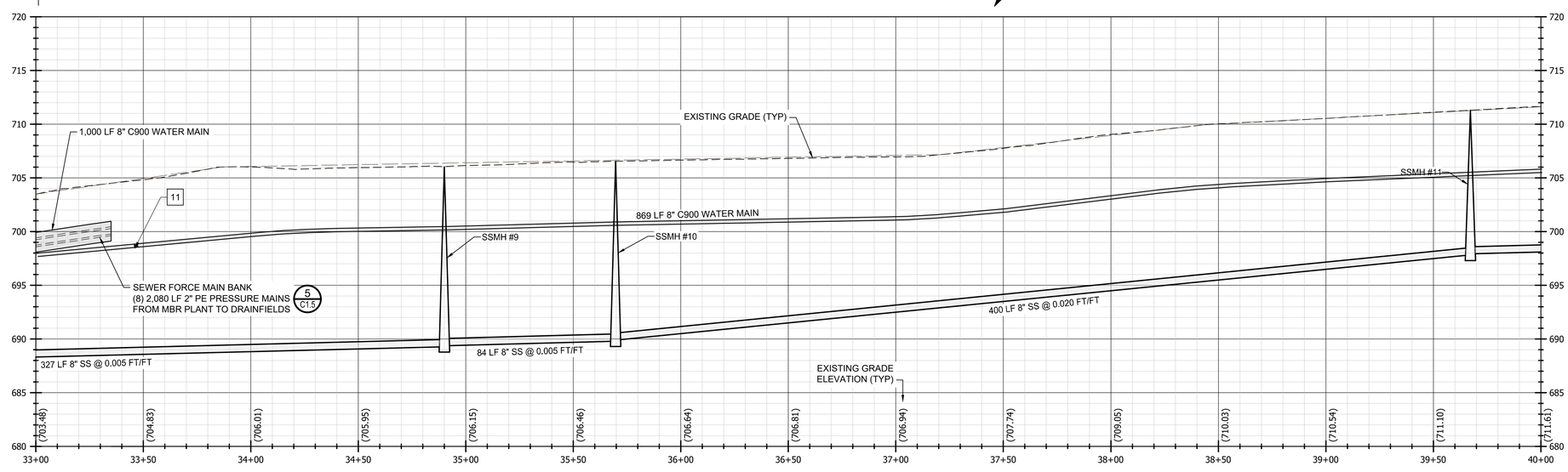

G WATER & SEWER UTILITY PROFILE
HORZ. SCALE: 1" = 30' - VERT. SCALE: 1" = 6'

NOTES:

WATER MAIN STANDARD TRENCHING PER DETAIL 1 ON DWG C3.18.

GRAVITY SEWER MAIN STANDARD TRENCHING PER DETAIL 1 ON DWG C3.20.

PRESSURE SEWER MAIN STANDARD TRENCHING PER DETAIL 5 ON DWG C1.5.

Call 811 two business days before you dig

SHEET 101 OF 226

BID SET

CAD NO.

NO.	REVISIONS	INT.	APP.	DATE

ACTION	BY	DATE
DESIGNED	SDS	04/03/2025
DRAWN	SD	04/03/2025
CHECKED (FIELD)		
CHECKED (HDQTS.)		

STEVEN DENNIS SCHMITZ — STATE OF WASHINGTON — 48228 — REGISTERED PROFESSIONAL ENGINEER — 04-03-2025

REGISTERED STAMP

WASHINGTON STATE PARKS AND RECREATION COMMISSION

NISQUALLY STATE PARK

PHASE 3A MAINTENANCE BUILDING AND WWTF WATER & SEWER PLAN & PROFILE

C3.8

SCALE 0 30 60 SCALE IN FEET

PARKS FILE#

I:\2019\10181900030 - Nisqually State Park\CADD\DWG\PHASE 3\C3.0 THRU C3.11 - UTILITY PLAN & PROFILES.dwg
Apr-09-25 10:15am

CURVE TABLE					
CURVE #	RADIUS	LENGTH	Δ DELTA	START POINT (N,E)	END POINT (N,E)
C7	700.00'	57.61'	004°42'56"	(562,372.08,181,862.69)	(562,410.93,181,905.20)
C8	400.00'	169.82'	024°19'28"	(562,671.67,182,215.23)	(562,804.90,182,318.48)

LINE TABLE				
LINE #	LENGTH	BEARING	START POINT (N,E)	END POINT (N,E)
L12	405.10'	N49° 56' 08"E	(562410.93, 181905.20)	(562671.67, 182215.23)

LEGEND

- ROADWAY CENTERLINE
- WATER LINE — W
- WATER SERVICE LINE
- WATER BEND W/ THRUST BLOCKING (ANGLES VARY)
- WATER TEE W/ THRUST BLOCKING
- FIRE HYDRANT
- WATER CAP W/ THRUST BLOCKING
- WATER METER
- WATER GATE VALVE
- WATER BLOWOFF
- SEWER LINE — SS
- SEWER MANHOLE
- SEWER CLEANOUT
- SEWER FORCE MAIN — FM
- RIGHT OF WAY

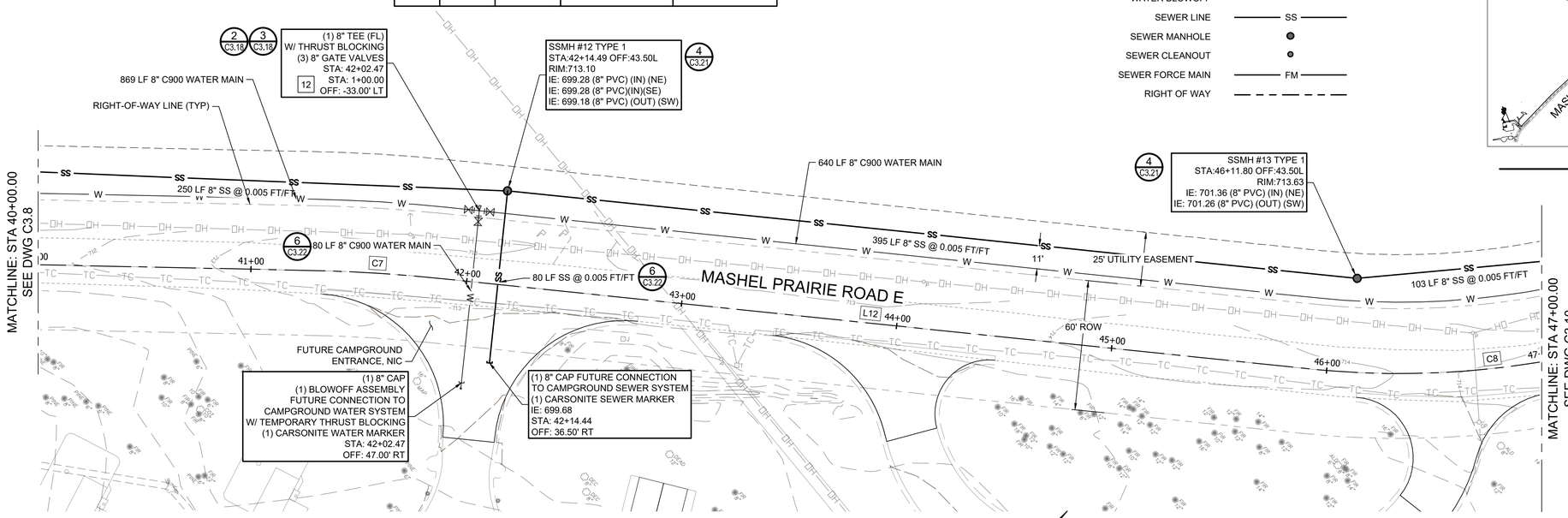

(H) WATER & SEWER UTILITY PLAN

SCALE: 1" = 30'

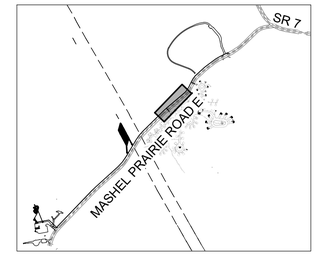

KEY MAP

N.T.S.

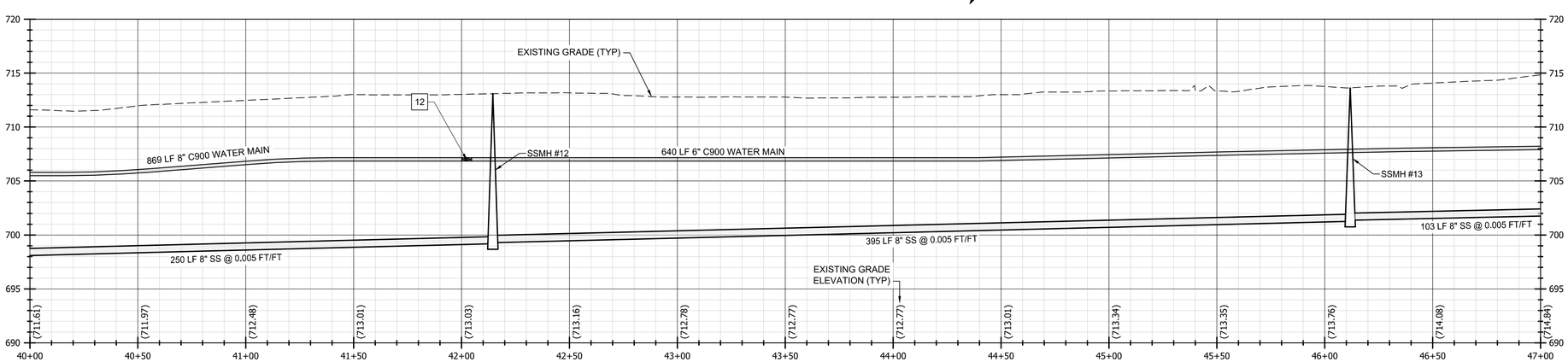

(H) WATER & SEWER UTILITY PROFILE

HORZ. SCALE: 1" = 30' - VERT. SCALE: 1" = 6'

NOTES:

WATER MAIN STANDARD TRENCHING PER DETAIL 1 ON DWG C3.18.

GRAVITY SEWER MAIN STANDARD TRENCHING PER DETAIL 1 ON DWG C3.20.

PRESSURE SEWER MAIN STANDARD TRENCHING PER DETAIL 5 ON DWG C1.5.

811 Call 811 two business days before you dig

SHEET 102 OF 226

BID SET

CAD NO.

NO.	REVISIONS	INT.	APP.	DATE

ACTION	BY	DATE
DESIGNED	SDS	04/03/2025
DRAWN	SD	04/03/2025
CHECKED (FIELD)		
CHECKED (HDQTS.)		

STEVEN DENNIS SCHMITZ
STATE OF WASHINGTON
48228
REGISTERED PROFESSIONAL ENGINEER
04-03-2025

REGISTERED STAMP

WASHINGTON STATE PARKS AND RECREATION COMMISSION

NISQUALLY STATE PARK

PHASE 3A MAINTENANCE BUILDING AND WWTF WATER & SEWER PLAN & PROFILE

C3.9

SCALE 0 30 60 SCALE IN FEET

PARKS FILE#

I:\2019\1018190030 - Nisqually State Park\CADD\DWG\PHASE 3\C3.0 THRU C3.11 - UTILITY PLAN & PROFILES.dwg
Apr-09-25 10:17am

LINE TABLE				
LINE #	LENGTH	BEARING	START POINT (N,E)	END POINT (N,E)
L13	80.81'	N25° 36' 40"E	(562804.90, 182318.48)	(562877.77, 182353.41)
L14	144.78'	N48° 05' 05"E	(563033.71, 182470.27)	(563130.43, 182578.00)
L15	193.99'	N52° 50' 38"E	(563151.57, 182603.62)	(563268.74, 182758.23)

CURVE TABLE					
CURVE #	RADIUS	LENGTH	Δ DELTA	START POINT (N,E)	END POINT (N,E)
C9	500.00'	196.12'	022°28'25"	(562,877.77,182,353.41)	(563,033.71,182,470.27)
C10	400.00'	33.23'	004°45'33"	(563,130.43,182,578.00)	(563,151.57,182,603.62)

LEGEND

- ROADWAY CENTERLINE
- WATER LINE — W —
- WATER SERVICE LINE
- WATER BEND W/ THRUST BLOCKING (ANGLES VARY)
- WATER TEE W/ THRUST BLOCKING
- FIRE HYDRANT
- WATER CAP W/ THRUST BLOCKING
- WATER METER
- WATER GATE VALVE
- WATER BLOWOFF
- SEWER LINE — SS —
- SEWER MANHOLE
- SEWER CLEANOUT
- SEWER FORCE MAIN — FM —
- RIGHT OF WAY

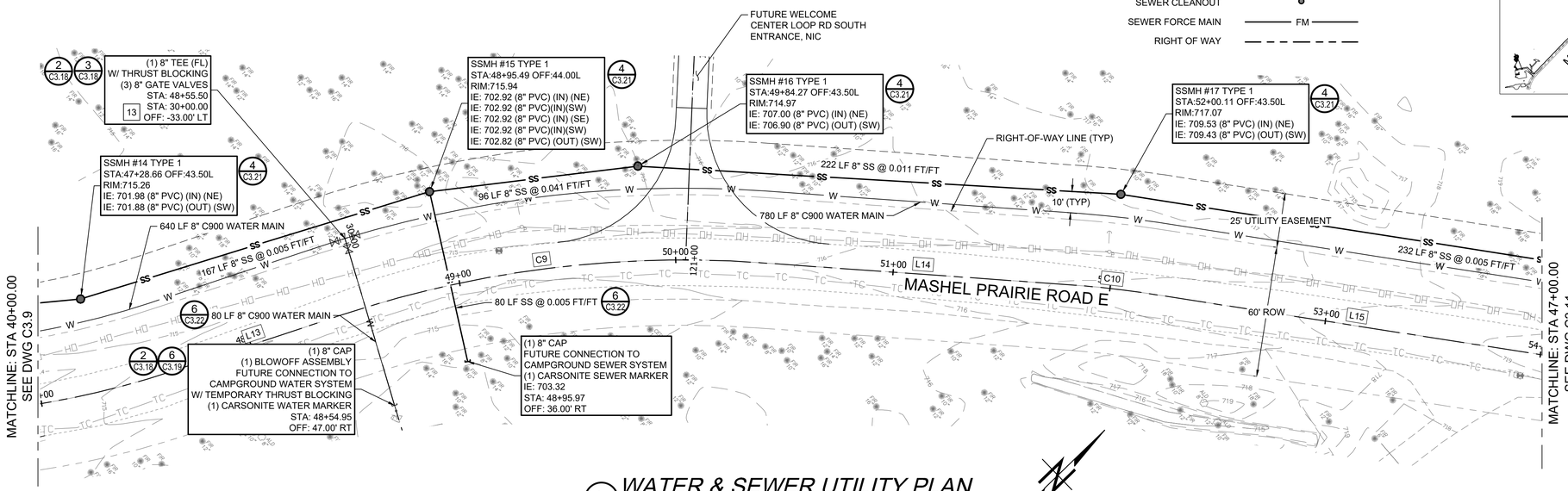

1 WATER & SEWER UTILITY PLAN

SCALE: 1" = 30'

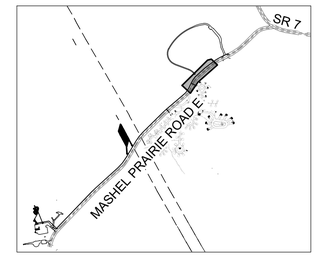

KEY MAP

N.T.S.

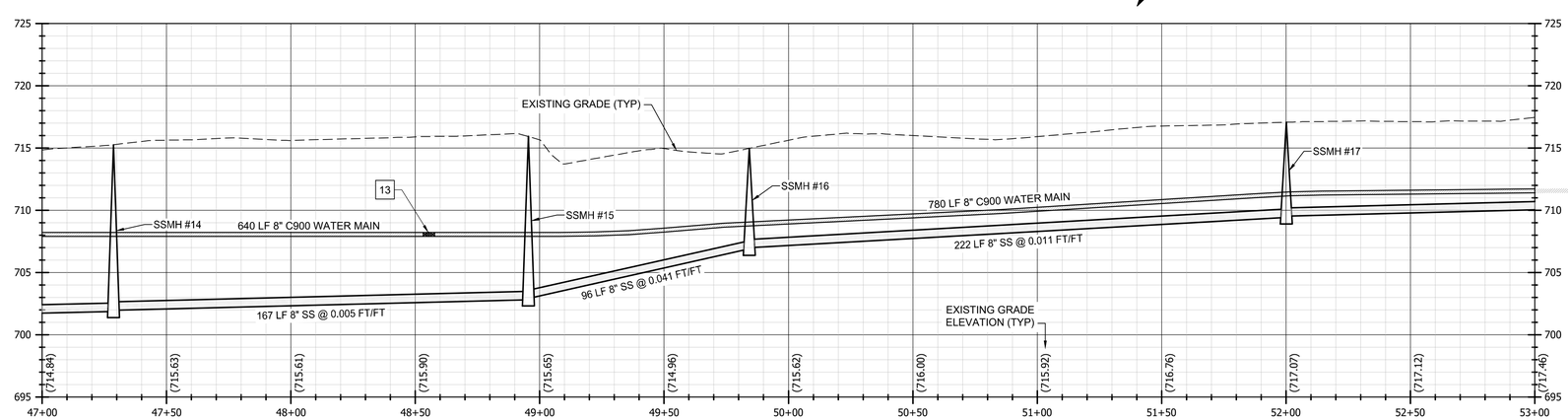

1 WATER & SEWER UTILITY PROFILE

HORZ. SCALE: 1" = 30' - VERT. SCALE: 1" = 6'

NOTES:

WATER MAIN STANDARD TRENCHING PER DETAIL 1 ON DWG C3.18.

GRAVITY SEWER MAIN STANDARD TRENCHING PER DETAIL 1 ON DWG C3.20.

PRESSURE SEWER MAIN STANDARD TRENCHING PER DETAIL 5 ON DWG C1.5.

Call 811 two business days before you dig

SHEET 103 OF 226

BID SET

CAD NO.

NO.	REVISIONS	INT.	APP.	DATE

ACTION	BY	DATE
DESIGNED	SDS	04/03/2025
DRAWN	SD	04/03/2025
CHECKED (FIELD)		
CHECKED (HDQTS.)		

STEVEN DENNIS SCHMITZ — STATE OF WASHINGTON — 48228 — REGISTERED PROFESSIONAL ENGINEER — 04-03-2025

REGISTERED STAMP

WASHINGTON STATE PARKS AND RECREATION COMMISSION

NISQUALLY STATE PARK

PHASE 3A MAINTENANCE BUILDING AND WWTF WATER & SEWER PLAN & PROFILE

C3.10

SCALE 0 30 60 SCALE IN FEET

PARKS FILE#

I:\2019\1018190030 - Nisqually State Park\CADD\DWG\PHASE 3\C3.0 THRU C3.11 - UTILITY PLAN & PROFILES.dwg
Apr-09-25 10:18am

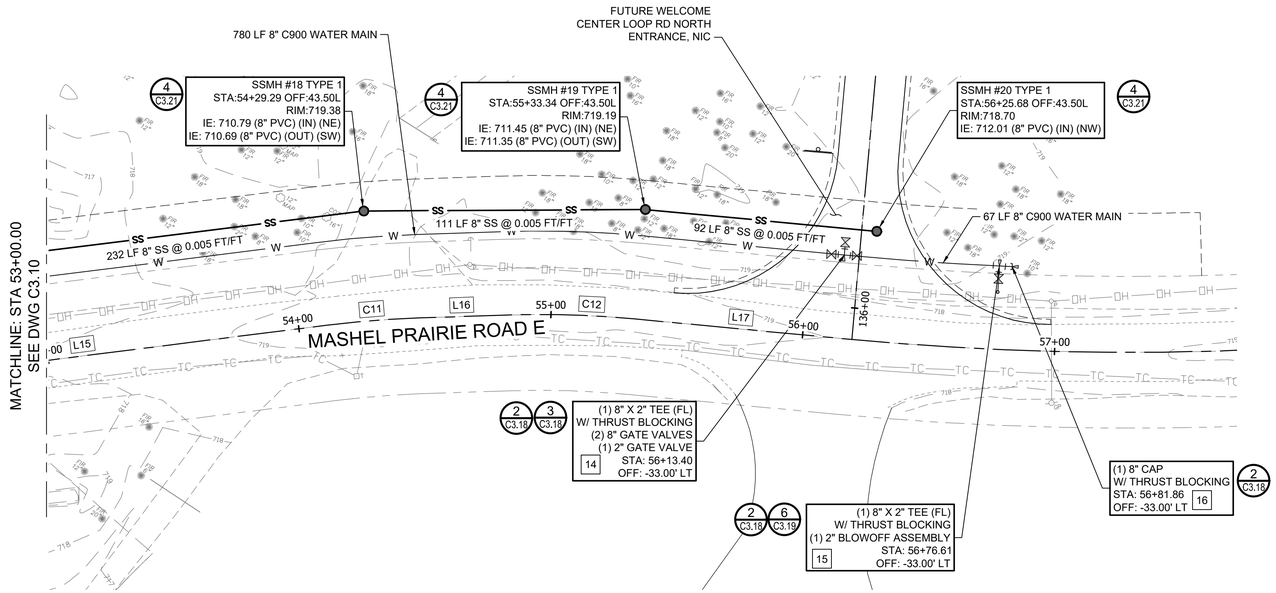

J WATER & SEWER UTILITY PLAN

SCALE: 1" = 30'

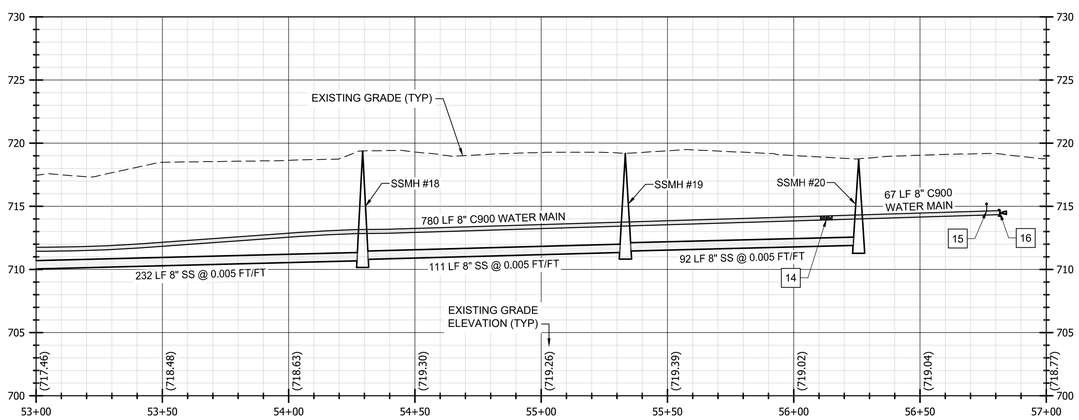

J WATER & SEWER UTILITY PROFILE

HORZ. SCALE: 1" = 30' - VERT. SCALE: 1" = 6'

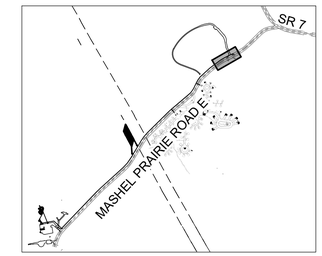

KEY MAP

N.T.S.

LEGEND

ROADWAY CENTERLINE	
WATER LINE	W
WATER SERVICE LINE	
WATER BEND W/ THRUST BLOCKING (ANGLES VARY)	
WATER TEE W/ THRUST BLOCKING	
FIRE HYDRANT	
WATER CAP W/ THRUST BLOCKING	
WATER METER	
WATER GATE VALVE	
WATER BLOWOFF	
SEWER LINE	SS
SEWER MANHOLE	
SEWER CLEANOUT	
SEWER FORCE MAIN	FM
RIGHT OF WAY	

LINE TABLE

LINE #	LENGTH	BEARING	START POINT (N,E)	END POINT (N,E)
L15	193.99'	N52° 50' 38"E	(563151.57, 182603.62)	(563268.74, 182758.23)
L16	34.57'	N58° 03' 44"E	(563289.39, 182788.23)	(563307.68, 182817.56)
L17	83.47'	N65° 24' 19"E	(563331.94, 182862.68)	(563366.68, 182938.58)

CURVE TABLE

CURVE #	RADIUS	LENGTH	Δ DELTA	START POINT (N,E)	END POINT (N,E)
C11	400.00'	36.43'	005°13'06"	(563,268.74,182,758.23)	(563,289.39,182,788.23)
C12	400.00'	51.26'	007°20'35"	(563,307.68,182,817.56)	(563,331.94,182,862.68)

NOTES:

WATER MAIN STANDARD TRENCHING PER DETAIL 1 ON DWG C3.18.

GRAVITY SEWER MAIN STANDARD TRENCHING PER DETAIL 1 ON DWG C3.20.

PRESSURE SEWER MAIN STANDARD TRENCHING PER DETAIL 5 ON DWG C1.5.

Call 811 two business days before you dig

SHEET 104 OF 226

BID SET

CAD NO.

NO.	REVISIONS	INT.	APP.	DATE

ACTION	BY	DATE
DESIGNED	SDS	04/03/2025
DRAWN	SD	04/03/2025
CHECKED (FIELD)		
CHECKED (HDQTS.)		

STEVEN DENNIS SCHMITZ
STATE OF WASHINGTON
48228
REGISTERED PROFESSIONAL ENGINEER
04-03-2025

REGISTERED STAMP

WASHINGTON STATE PARKS AND RECREATION COMMISSION

NISQUALLY STATE PARK

PHASE 3A MAINTENANCE BUILDING AND WWTF WATER & SEWER PLAN & PROFILE

C3.11

SCALE 0 30 60 SCALE IN FEET

PARKS FILE#

I:\2019\101819000030 – Nisqually State Park\CADD\DWG\PHASE 3\C3.0 THRU C3.11 – UTILITY PLAN & PROFILES.dwg
Apr-09-25 10:20am

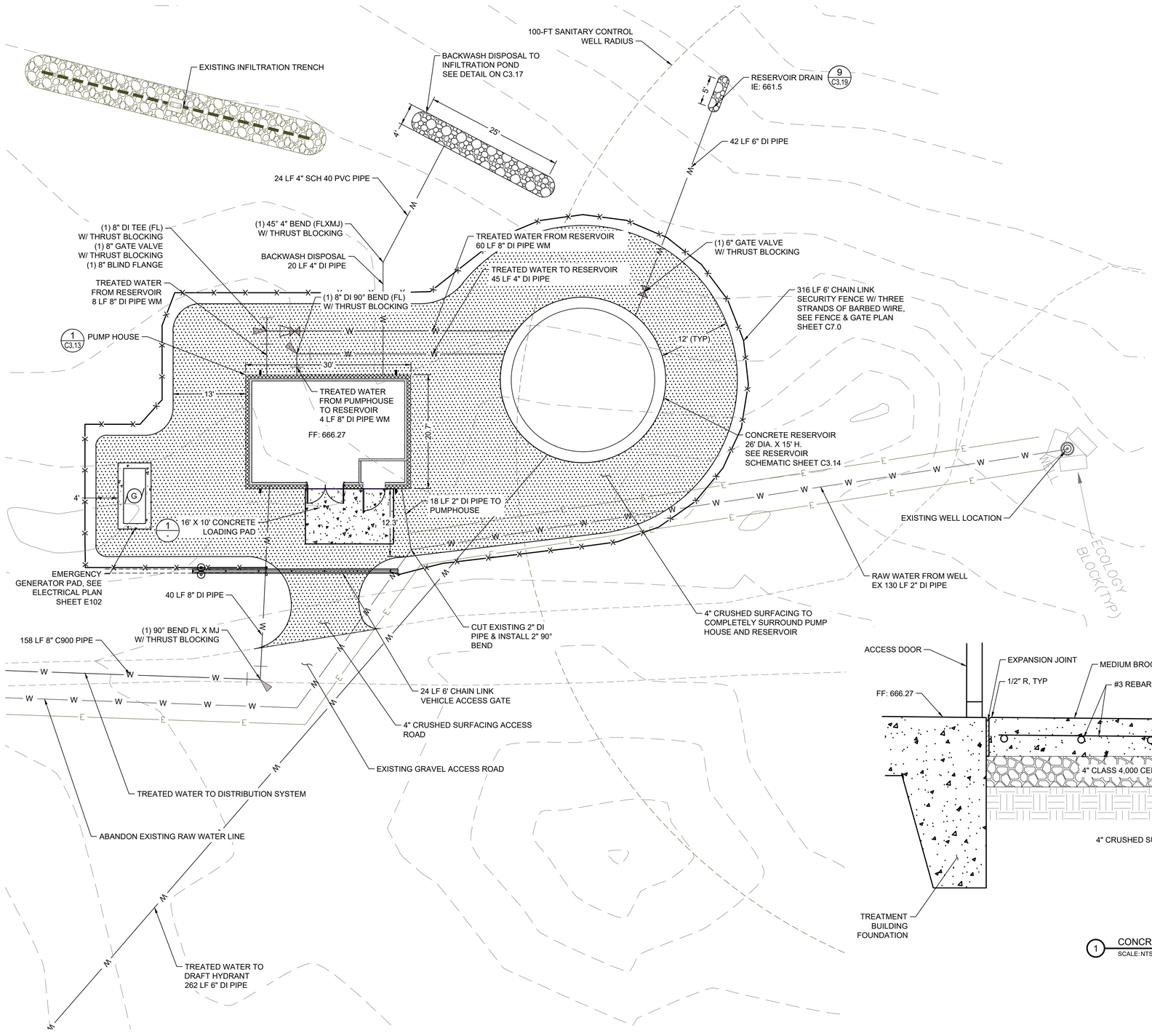

LEGEND

BUILDING	
GRAVEL	
WATER MAIN	W — W
CONCRETE	
POWER LINE	E
FENCE	X X X
BEND W/ THRUST BLOCKING (ANGLE VARIES)	
TEE W/ THRUST BLOCKING	
GATE VALVE	

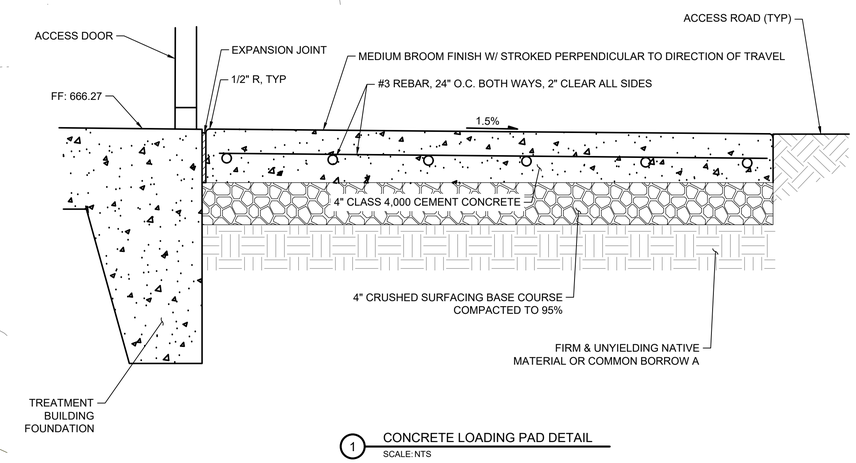

1 CONCRETE LOADING PAD DETAIL
SCALE: NTS

Call 811 two business days before you dig

SHEET 105 OF 226

BID SET

CAD NO.

NO.	REVISIONS	INT.	APP.	DATE

ACTION	BY	DATE
DESIGNED	SDS	04/03/2025
DRAWN	SD	04/03/2025
CHECKED (FIELD)		
CHECKED (HDQTS.)		

STEVEN DENNIS SCHMITZ — STATE OF WASHINGTON — 48228 — REGISTERED PROFESSIONAL ENGINEER — 04-03-2025

REGISTERED STAMP

WASHINGTON STATE PARKS AND RECREATION COMMISSION

NISQUALLY STATE PARK

PHASE 3A MAINTENANCE BUILDING AND WWTF PUMP HOUSE AREA IMPROVEMENT PLAN C3.12

SCALE 0 10 20 SCALE IN FEET

PARKS FILE#

I:\2019\1018190030 – Nisqually State Park\CADD\DWG\PHASE 3\C3.12 THRU C3.16 – UTILITY DETAILS.dwg
Apr-09-25 10:20am

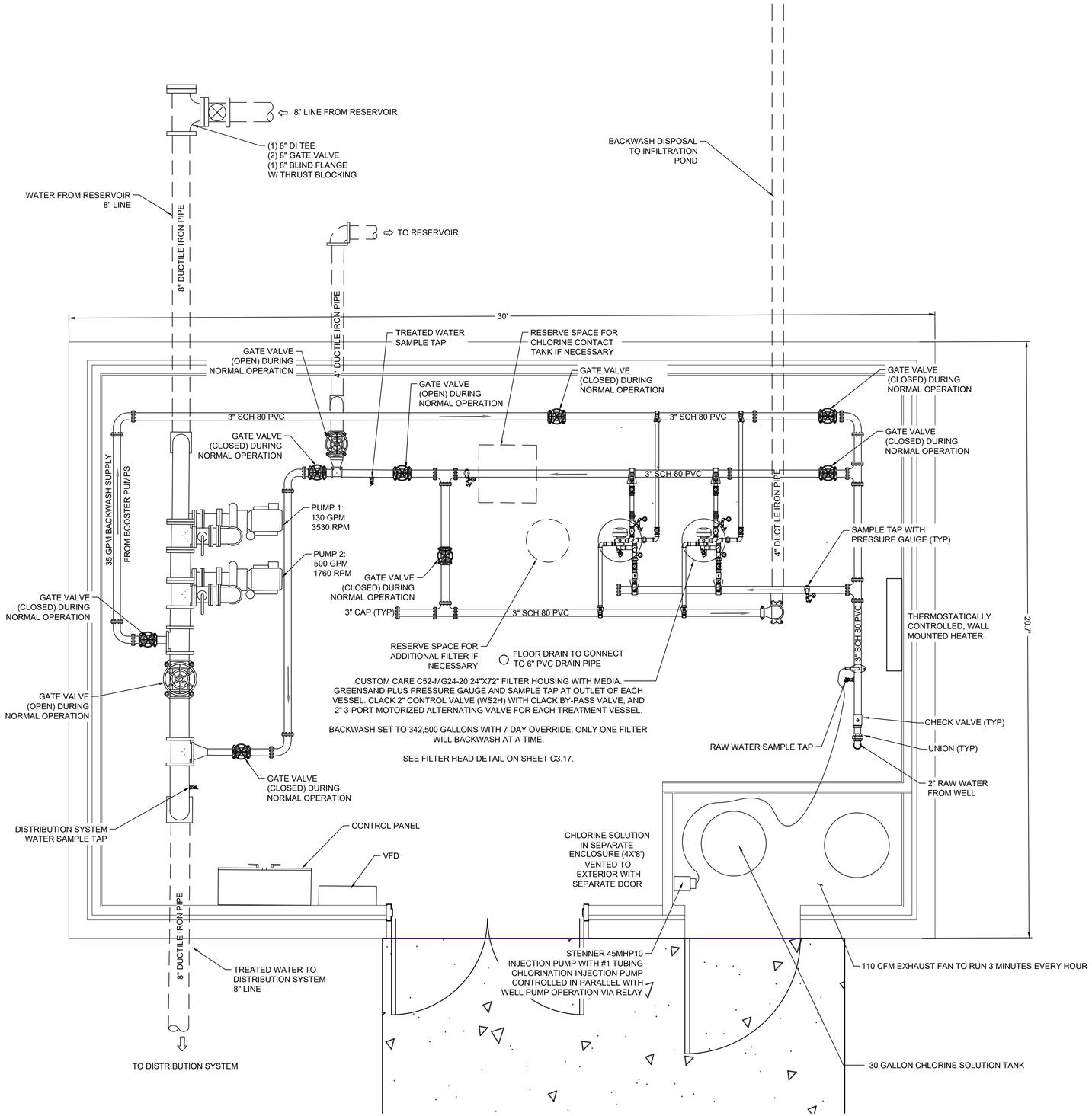

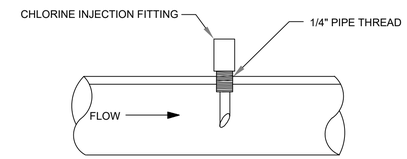

1 CHLORINE INJECTION DETAIL
SCALE: NTS

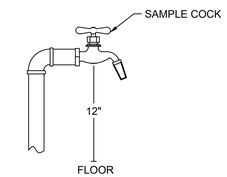

2 SAMPLE TAP DETAIL
SCALE: NTS

NOTES:

1. ALL MATERIALS, WORKMANSHIP, AND INSTALLATION SHALL BE IN CONFORMANCE WITH ALL APPLICABLE CODES AND ADHERE TO INDUSTRY STANDARDS AND GOOD WORKMANSHIP.
2. ALL PIPES AND EQUIPMENT SHALL BE REASONABLY SECURED AND PROTECTED FROM FREEZING, RUBBING, AND PHYSICAL IMPACT. SAMPLE TAPS MUST BE ORIENTED TO ALLOW SAMPLE COLLECTION. PRESSURE GAUGES MUST BE ORIENTED TO ALLOW VISUAL INSPECTION. ALL NEW WIRING AND ELECTRICAL WORK SHALL BE INSPECTED BY L&I AS REQUIRED. ALL EQUIPMENT SHALL BE INSTALLED ACCORDING TO MANUFACTURER'S INSTRUCTIONS AND SPECIFICATIONS.
3. ALL COMPONENTS SHALL BE DISINFECTED AND FLUSHED ACCORDING TO UPC. ALL COMPONENTS SHALL BE INSPECTED FOR LEAKS.
4. ALL PIPING AND PLUMBING SHALL BE ADEQUATELY SUPPORTED/ ANCHORED.
5. PUMP HOUSE FLOOR SHALL BE CLASS 4000 CONCRETE, BROOMED FINISH.
6. PUMP HOUSE SHALL INCLUDE SCREEN FLOOR DRAIN TO CONNECT TO 6" SOLID PVC DRAIN PIPE, SEE GRADING & DRAINAGE PLAN SHEET C4.0.
7. PUMP HOUSE BACKWASH OUTLET SHALL BE SCREENED.
8. PUMP HOUSE SHOWN GRAPHICALLY. SYSTEM LAYOUT MAY BE MODIFIED AS LONG AS INTENT OF DESIGN IS MET.
9. ALL COMPONENTS IN CONTACT WITH POTABLE WATER SHALL BE NSF 61 CERTIFIED.
10. ALL COMPONENTS SHALL BE NON-CORROSIVE MATERIAL.

BID SET

Call 811 two business days before you dig

SHEET 106 OF 226

CAD NO.

NO.	REVISIONS	INT.	APP.	DATE

ACTION	BY	DATE
DESIGNED	SDS	04/03/2025
DRAWN	SD	04/03/2025
CHECKED (FIELD)		
CHECKED (HDQTS.)		

STEVEN DENNIS SCHMITZ
STATE OF WASHINGTON
48228
REGISTERED PROFESSIONAL ENGINEER
04-03-2025

REGISTERED STAMP

WASHINGTON STATE PARKS AND RECREATION COMMISSION

NISQUALLY STATE PARK

PHASE 3A MAINTENANCE BUILDING AND WWTF PUMP HOUSE PLAN C3.13

SCALE 0 2 4 SCALE IN FEET

PARKS FILE#

I:\2019\1018190030 – Nisqually State Park\CADD\DWG\PHASE 3\C3.12 THRU C3.16 – UTILITY DETAILS.dwg
Apr-09-25 10:20am

NOTES:

RESERVOIR AND APPURTENANCES SHALL BE PACKAGED SYSTEM FROM MT. BAKER SILO, INC. OR ENGINEER APPROVED EQUIVALENT

1. ALL MATERIALS, WORKMANSHIP, AND INSTALLATION SHALL BE IN CONFORMANCE WITH THE WSDOT STANDARD SPECIFICATIONS FOR ROAD, BRIDGE AND MUNICIPAL CONSTRUCTION.
2. SYSTEM PRESSURE IS TO BE PROVIDED VIA BOOSTER PUMP SYSTEM AND PRESSURE TANKS. SYSTEM PRESSURE IS NOT DEPENDENT ON RESERVOIR ELEVATION.
3. OPERATIONAL STORAGE ASSUMED AT 1' DEPTH.
4. EQUALIZING STORAGE DETERMINED BY SUBTRACTING SOURCE CAPACITY FROM PEAK HOURLY DEMAND AT FULL BUILD-OUT, MULTIPLIED BY 150 MINUTES AS IDENTIFIED IN THE WSDOH WATER SYSTEMS DESIGN MANUAL.
5. FIRE SUPPRESSION STORAGE ELEVATIONS DETERMINED USING 500 GPM FOR 1 HOUR.
6. STANDBY STORAGE DETERMINED FROM MAXIMUM DAILY DEMAND. STANDBY STORAGE IS TO BE NESTED WITHIN FIRE SUPPRESSION STORAGE.
7. STRUCTURAL FILL AND CONCRETE FOUNDATION FOR RESERVOIR SHALL MEET REQUIREMENTS IDENTIFIED BY GEOTECHNICAL ENGINEER AND RESERVOIR MANUFACTURER.

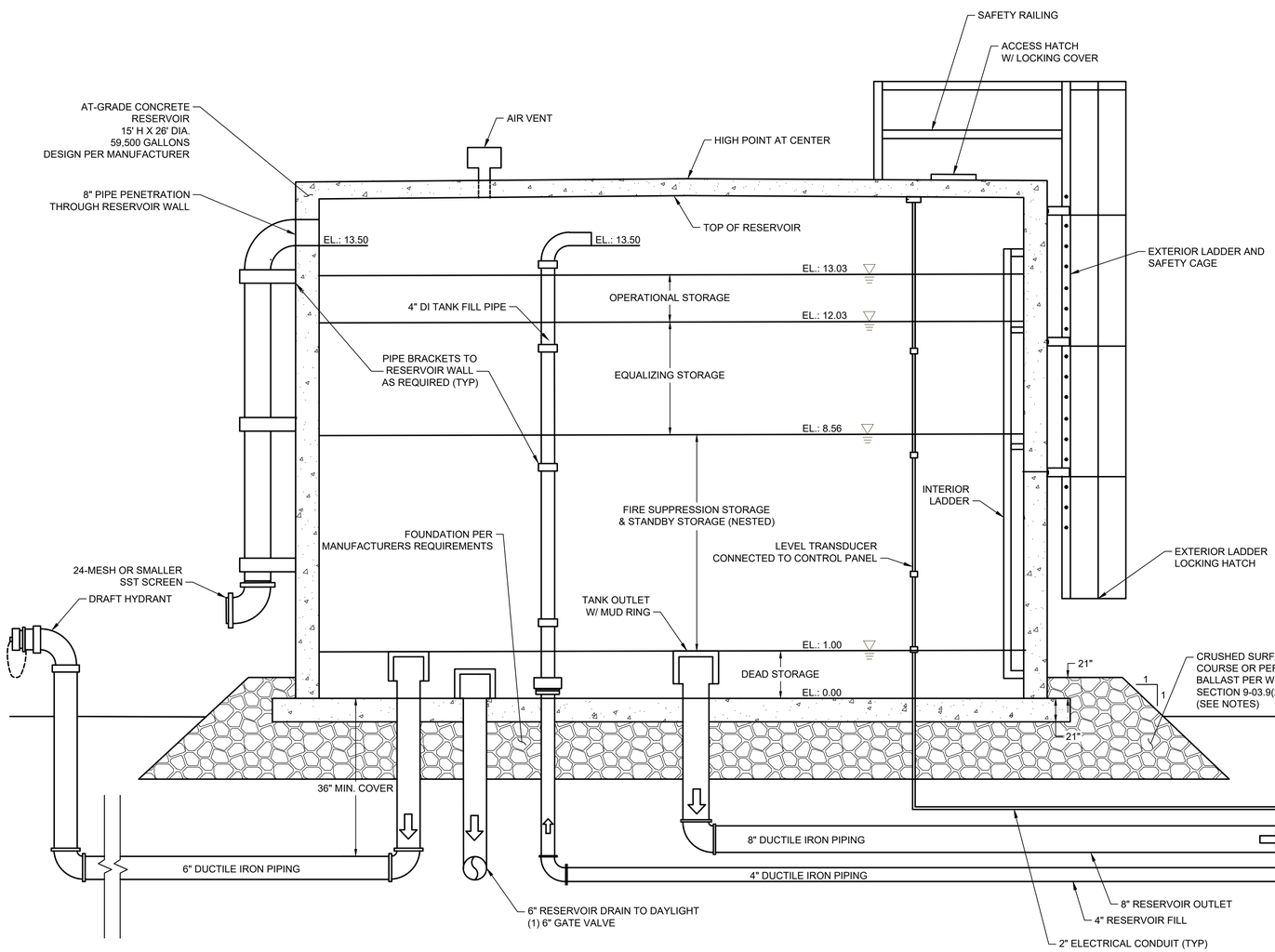

RESEVOIR PROFILE VIEW

NOT TO SCALE
(INITIAL LEVEL SETTINGS SHOWN)

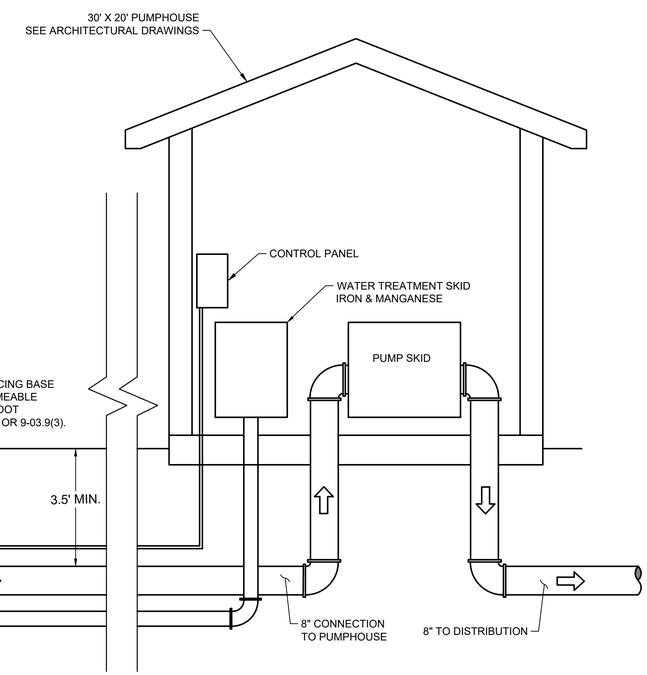

PUMP HOUSE PROFILE VIEW

NOT TO SCALE

Call 811 two business days before you dig

SHEET 107 OF 226

BID SET

CAD NO.

NO.	REVISIONS	INT.	APP.	DATE

ACTION	BY	DATE
DESIGNED	SDS	04/03/2025
DRAWN	SD	04/03/2025
CHECKED (FIELD)		
CHECKED (HDQTS.)		

STEVEN DENNIS SCHMITZ
STATE OF WASHINGTON
48228
REGISTERED PROFESSIONAL ENGINEER
04-03-2025

REGISTERED STAMP

WASHINGTON STATE PARKS AND RECREATION COMMISSION

NISQUALLY STATE PARK

PHASE 3A MAINTENANCE BUILDING AND WWTF RESERVOIR SCHEMATIC C3.14

SCALE
NTS

PARKS FILE#

I:\2019\1018190030 - Nisqually State Park\CADD\DWG\PHASE 3\C3.12 THRU C3.16 - UTILITY DETAILS.dwg
Apr-09-25 10:20am

SHELL HEIGHT	BASE SLAB DIAMETER	BASE SLAB THICKNESS	BAR "A" BOTTOM	RADIAL* STEEL	BAR "B" TOP	DOWEL BARS & EMBEDMENT	MIN. WALL THICK.	STATIC SOIL BEARING PSF	DYNAMIC SOIL BEARING PSF	NOMINAL VOLUME GAL
15	30'-0"	21"	#5 @ 12" 29'-6"ø	N/A	#5 @ 9" 29'-6"ø	#5 @ 11.50" 48" (16" INTO BASE SLAB) (92) BARS EA FACE	12"	1337	1861	55,600

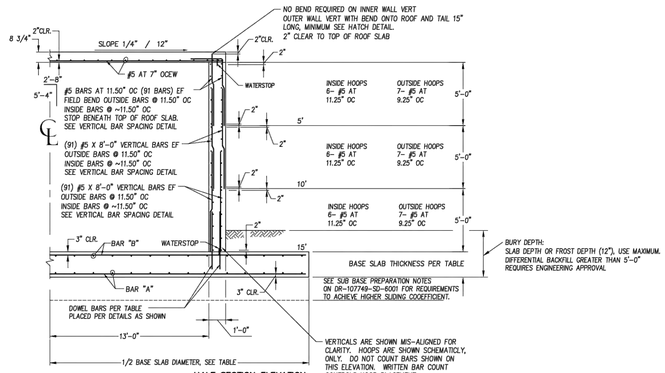

HALF SECTION ELEVATION
1/4" = 1'-0"

NOTE:
FOR COMPLETE WALL REINFORCING DETAILS SEE DWG DR-107749-SD-6001

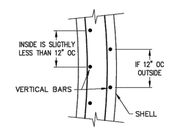

VERTICAL BAR SPACING DETAIL
NTS

REQUIRED SOILS CAPACITY

STATIC: SEE STATIC COLUMN ABOVE
DYNAMIC: SEE DYNAMIC COLUMN ABOVE PLUS OVERBURDEN WEIGHT

REBAR SPLICE CRITERIA:

LAP SPLICE DISTANCE (INCHES)		
BAR SIZE	ALL ROOF BARS, ALL VERTICAL BARS, ALL BAR "A"	ALL HOOPS BAR "B"
#5	18	23
#6	21	28
#8	44	46

ALL LAP SPLICES ARE CLASS B

NON-CONTACT LAP SPLICES ARE ACCEPTABLE. THE MAXIMUM SPACE BETWEEN NON-CONTACT VERTICAL BARS SHALL BE 6". THE MINIMUM SPACE SHALL BE 1".

DOWEL EMBEDMENT CRITERIA:

SEE TABLE FOR SPECIFIC DOWEL EMBEDMENT LENGTHS.

SLAB DEPTH CONTROLS DOWEL BAR BOND LENGTH WHICH ALTERS THE NUMBER OF DOWELS REQUIRED

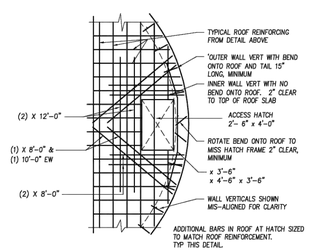

HATCH REINFORCEMENT LAYOUT
NTS

STRUCTURAL NOTES:

1. STRUCTURAL DESIGN IS IN ACCORDANCE WITH THE CURRENT EDITION OF THE INTERNATIONAL BUILDING CODE, IBC, ASCE 7, AGI 350 AND ACI 350.3.
2. FOUNDATION:

   IN ACCORDANCE WITH IBC 2021 SECTION 1803.5.12 A GEOTECHNICAL INVESTIGATION SHALL BE CONDUCTED. IF APPLICABLE INVESTIGATION DOES NOT MEET THE SOIL LOADING REQUIREMENTS AS STATED ON THIS DRAWING, CONSULT THE ENGINEER.

   GEOTECHNICAL REPORT USED FOR DESIGN:

   GEOENGINEERS GEOTECHNICAL ENGINEERING SERVICES, PROPOSED WATER TANK, NISQUALLY STATE PARK, PIERCE COUNTY, WASHINGTON.
   FILE NO. 2933-067-01. DATED JUNE 10, 2022.
3. LOADS:

   ROOF LIVE LOAD 40 PSF
   GROUND SNOW LOAD 45 PSF, ROOF SNOW LOAD 45.4 PSF
   SNOW CRITERIA C_e=1.0, C_t=1.2, I_s=1.2
   FLUID WEIGHT DETERMINED AT 62.4 PCF
   CONCRETE WEIGHT DETERMINED AT 150 PCF
   WIND LOAD DETERMINED AT 125 MPH, EXP "D"
   SEISMIC CRITERIA
   Ss = 1.188, S_{ds}=0.812
   S1 = 0.424, S_{d1}=0.530, I_e=1.50
   SITE CLASS "D" PER GEOTECHNICAL REPORT
   SEISMIC FORCE RESISTING SYSTEM: "FLAT-BOTTOMED TANK, GROUND SUPPORTED CONCRETE TANK"
   SEISMIC DESIGN CATEGORY = D
   SEISMIC, WIND AND STRUCTURE DESIGN CATEGORY PER ASCE 7, CATEGORY IV FACILITY
   ANALYSIS PROCEDURE:EQUIVILANT LATERAL FORCE
   RESPONSE MODIFICATION FACTOR = 2
   V_{st}=SEISMIC DESIGN BASE SHEAR = 277 kips
   SEISMIC RESPONSE COEFFICIENTS: C_{sd}=0.609, S_{ad}=0.812, S_{fd}=0.265
4. CONCRETE:

   CONCRETE MATERIALS, REINFORCING MATERIALS, BENDING, PLACEMENT OF REINFORCING AND CONCRETE PLACEMENT SHALL BE IN ACCORDANCE WITH IBC, CHAPTER 19 AND ACI-RELATED DOCUMENTS.

   CONCRETE SHALL HAVE THE FOLLOWING VALUES – COMPRESSIVE STRENGTH OF 4500 PSI, SLUMP OF 3.5 – 4.5", AIR ENTRAINMENT OF 4.5 – 7.5%, W/C RATIO OF 0.42±. SLUMP MAY BE INCREASED TO IMPROVE WORKABILITY BY INCORPORATING WATER REDUCING AGENTS AND PLASTICIZERS. FOLLOW MANUFACTURER'S INSTRUCTIONS WHEN INCLUDING THESE ADMIXTURES. MAXIMUM SLUMP UNDER THESE CONDITIONS SHALL BE 8". NOTE THAT PLASTICIZERS WILL CAUSE A REDUCTION IN AIR ENTRAINED SO COORDINATE WITH BATCH PLANT. USE OTHER ADMIXTURES PER MANUFACTURERS' SPECIFICATIONS.
   THE MAXIMUM AGGREGATE SIZE FOR THE BASE SLAB SHALL BE 1 1/2". THE MAXIMUM AGGREGATE SIZE FOR THE WALLS AND ROOF SHALL BE ABOUT 3/4".

   NOTE THAT THE INTERFACE BETWEEN THE WALL AND BASE SLAB SHALL BE ROUGHENED TO AN AMPLITUDE OF APPROXIMATELY 1/4".

   REINFORCING BARS SHALL BE GRADE 60, (60 KSI) CONFORMING TO ASTM SPECIFICATION A615. SPLICES SHOULD BE STAGGERED HORIZONTALLY (CENTER OF LAP TO CENTER OF LAP) BY NOT LESS THAN ONE LAP LENGTH OR 3 FT AND SHOULD NOT COINCIDE IN VERTICAL ARRAYS MORE FREQUENTLY THAN EVERY THIRD BAR RING.

   MINIMUM CLEAR DISTANCES FOR REBAR PLACEMENT ARE AS SHOWN. BAR POSITION MAY BE UP TO 1" FURTHER FROM BUT NOT CLOSER TO THE FORMED SURFACES OR SOIL INTERFACE. PLACE HORIZONTAL BARS ON PLASTIC CHAIRS OR DOBIES BEFORE PLACING CONCRETE.

   REINFORCING BARS THAT ARE BEING WELDED SHALL BE ASTM A 706, GRADE 60.

   DOWEL BARS SHALL BE PLACED DURING OR IMMEDIATELY FOLLOWING THE BASE SLAB POUR. NO HOOKS REQUIRED ON VERTICAL BARS.
5. SPECIAL INSPECTION:

   WHEN REQUIRED BY THE LOCAL JURISDICTION, SPECIAL INSPECTION SHALL BE IN ACCORDANCE WITH IBC CHAPTER 17. IT SHALL INCLUDE THE SIZE AND PLACEMENT OF THE REINFORCING STEEL, PLACEMENT AND TESTING OF THE CONCRETE. SPECIAL INSPECTIONS SHALL BE PROVIDED BY THE OWNER'S REPRESENTATIVE OR TESTING AGENCY.

   TANK ACCESSORIES SHALL BE INSTALLED IN ACCORDANCE WITH THE MANUFACTURERS' SPECIFICATIONS AND ASSOCIATED INDUSTRY STANDARDS.
6. BACKFILL:

   BACKFILLING SHALL NOT COMMENCE UNTIL AT LEAST 7 DAYS AFTER THE FINAL CONCRETE POUR (ROOF OR TOP LIFT AS APPLICABLE) HAS BEEN COMPLETED.

   NATIVE SOILS SHALL NOT BE USED WITHOUT GEOTECH APPROVAL.
7. FORM REMOVAL:

   WALL FORMS MAY GENERALLY BE REMOVED AFTER 12 HOURS "CUMULATIVE CURING TIME" PER ACI 350, SECTION 6.2
8. MITIGATION OF SETTLEMENT EFFECTS ON TANK ATTACHMENTS, INCLUDING PIPING, IS THE RESPONSIBILITY OF THE RESERVOIR OWNER. ANVIL DOES NOT ASSUME ANY DIRECT OR INFERRED LIABILITY FOR ANY DAMAGE OF TANK ATTACHMENTS DUE TO SETTLEMENT.
9. DIAGONAL BARS TO BE PROVIDED AT ALL WALL AND ROOF PENETRATIONS NOT SHOWN ON DRAWINGS.

CONTRACTOR CONTACT INFORMATION :
BAKER SILO LLC
concrete water reservoirs & storage tanks
P.O. BOX 979
LYNDEN, WA. 98264
(360) 354-4940

MAGDI M. I. GHALI
STATE OF WASHINGTON
48228
6/26/2024
REGISTERED PROFESSIONAL ENGINEER

SITE SPECIFIC DESIGN FOR
NISQUALLY STATE PARK RESERVOIR
EATONVILLE, WA 98328

ANVIL Engineering & Procurement Solutions
1675 W. BAKERVIEW RD.
BELLINGHAM, WA. 98226
(360) 671-1450

REV.	DATE	DESCRIPTION	BY	CHKD	ENGR	CLIENT	DWG. NO.	REFERENCE DRAWINGS
0	06/24	ISSUE FOR CONSTRUCTION	ENS	GVW				

BAKER SILO, LLC
26 FT DIAMETER RESERVOIR
ELEVATION, DETAIL & NOTES

SCALE	JOB NO.	ACCT. CODE	AREA	DRAWING NO.	REV.
Noted	107749	620-24		DR-107749-SD-6026	0

NOTE:

BAKER SILO DETAILS SHOWN FOR BIDDING PURPOSES ONLY

Call 811 two business days before you dig

SHEET 108 OF 226

CAD NO.

	DATE	INT.	APP.

REVISIONS

NO.

ACTION	BY	DATE
DESIGNED	SDS	04/03/2025
DRAWN	SD	04/03/2025
CHECKED (FIELD)		
CHECKED (HDQTS.)		

STEVEN DENNIS SCHMITZ
STATE OF WASHINGTON
48228
REGISTERED PROFESSIONAL ENGINEER
04-03-2025

REGISTERED STAMP

WASHINGTON STATE PARKS AND RECREATION COMMISSION

NISQUALLY STATE PARK

PHASE 3A MAINTENANCE BUILDING AND WWTF RESERVOIR DETAILS C3.15

BID SET

SCALE
NTS

PARKS FILE#

I:\2019\10181900030 – Nisqually State Park\CADD\DWG\PHASE 3\C3.12 THRU C3.16 – UTILITY DETAILS.dwg
Apr-09-25 10:20am

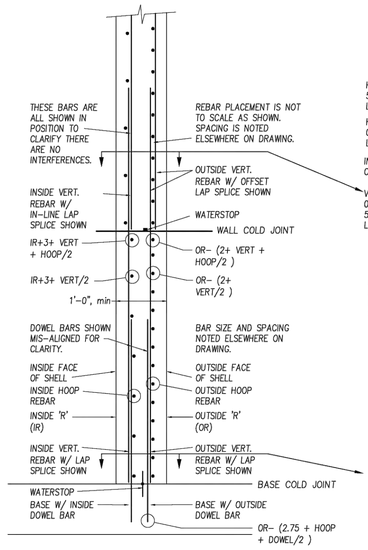

SHELL REINFORCING AT BASE DETAILS

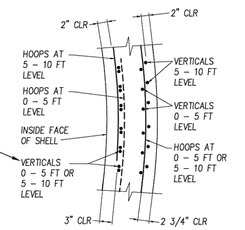

NOTE: VERTS IN 2ND WALL POUR AND ABOVE MAY BE MISALIGNED BETWEEN INNER AND OUTER BAR LOCATION AS LONG AS DESIGN SPACING IS PROVIDED. SEE DETAIL ON ELEVATION DRAWING.

PLAN VIEW
REBAR DETAILS AT 1ST TO 2ND WALL POUR

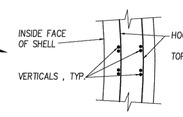

PLAN VIEW
VERTICAL TO DOWEL SPLICE DETAILS

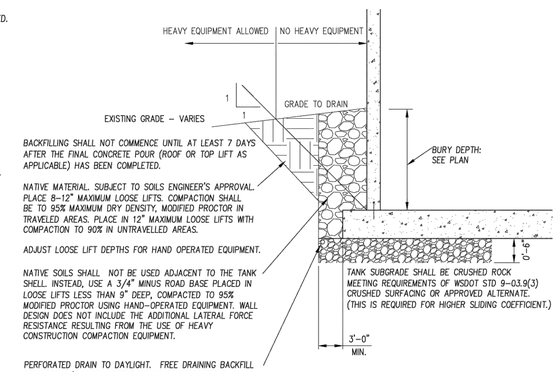

TYPICAL BURIED TANK SECTION
NTS

REQUIRED VERIFICATIONS AND INSPECTIONS – CONCRETE CONSTRUCTION	CONTINUOUS	PERIODIC
INSPECT REINFORCING STEEL AND PLACEMENT		X
VERIFY USE OF REQUIRED DESIGN MIX		X
AT THE TIME FRESH CONCRETE IS SAMPLED TO FABRICATION SPECIMENS FOR STRENGTH TESTS, PERFORM SLUMP AND AIR CONTENT TESTS, AND DETERMINE THE TEMPERATURE OF THE CONCRETE.	X	
INSPECT FORMWORK FOR SHAPE, LOCATION, AND DIMENSION OF THE CONCRETE MEMBER BEING FORMED		X

PROVIDE A MINIMUM OF 6 CYLINDERS PER EACH 50 CY OR 6 CYLINDERS PER DAY AS APPLIES BASED ON STANDARD 4"ø x 8" CYLINDERS TEST 6 CYLINDERS/50 CY AS FOLLOWS: 1 @ 7 DAYS, 3 @ 28 DAYS, 2 @ 56 DAYS. NOTIFY ENGINEER IF THIS IS NOT PROVIDED. VERIFY REBAR SIZE AND PLACEMENT PER APPROVED PLANS. INSPECTIONS SHALL BE PERFORMED BY QUALIFIED PERSONNEL FROM AN APPROVED AGENCY.

REQUIRED VERIFICATIONS AND INSPECTIONS – SOILS	CONTINUOUS	PERIODIC
VERIFY MATERIALS BELOW SHALLOW FOUNDATIONS ARE ADEQUATE TO ACHIEVE THE DESIGN BEARING CAPACITY		X
VERIFY EXCAVATIONS ARE EXTENDED TO PROPER DEPTH AND HAVE REACH PROPER MATERIAL		X
PERFORM CLASSIFICATION AND TESTING OF COMPACTED FILL MATERIALS		X
VERIFY USE OF PROPER MATERIALS, DENSITIES, AND LIFT THICKNESSES DURING PLACEMENT AND COMPACTION OF COMPACTED FILL	X	
PRIOR TO PLACEMENT OF COMPACTED FILL, OBSERVE SUBGRADE AND VERIFY THAT SITE HAS BEEN PREPARED PROPERLY		X

BAKER SILO, LLC IS NOT RESPONSIBLE FOR THE SOILS AND SITE PREPARATION FOR THE PAD BENEATH THE RESERVOIR. THEY RELY ON THE OWNER/OWNER'S CONTRACTOR TO PROVIDE A SUITABLE BUILDING SURFACE THAT COMPLIES WITH THE REQUIREMENTS CONTAINED IN THE SOILS REPORT AND OTHER SUCH PROJECT DEFINING DOCUMENTS, INCLUDING VERIFICATION OF THESE CRITERIA BY INSPECTION REPORTS. WHEN BAKER SILO IS CALLED ON-SITE TO START WORK, THEY EXPECT THAT THE SOILS AND SUB-BASE HAS BEEN SATISFACTORILY PREPARED AND APPROVED FOR THEIR WORK TO COMMENCE.

REFER TO IBC 2021, CHAPTER 17 FOR SPECIAL INSPECTION EXPLANATIONS

WHEN SPECIAL INSPECTION IS REQUIRED, SPECIAL INSPECTORS SHALL BE PROVIDED BY WABO APPROVED SPECIAL INSPECTION AGENCY. IF DEFICIENCIES ARE FOUND DURING INSPECTION NOTIFY THE ENGINEER OF RECORD IMMEDIATELY.

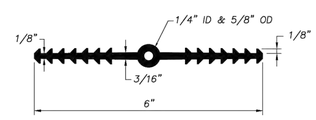

GREENSTREAK 703

WATER STOP
NTS

WATERSTOP NOTES:

1. AT THE INTERSECTION BETWEEN THE BASE SLAB AND WALL, USE GREENSTREAK 703 PLACED INSIDE REBAR MATS.
2. AT COLD JOINTS BETWEEN WALL POURS, USE VOLCLAY WATERSTOP RX-101 OR RX-102, DEPENDING ON AVAILABILITY. PLACE NEAR CENTER OF WALL.
3. INSTALL ALL WATERSTOP MATERIAL PER MANUFACTURER'S INSTRUCTIONS.

WADIA M. I. GHANDI
STATE OF WASHINGTON
48228
REGISTERED PROFESSIONAL ENGINEER
6/26/2024

SITE SPECIFIC DESIGN FOR
NISQUALLY STATE PARK RESERVOIR
EATONVILLE, WA 98328

CONTRACTOR CONTACT INFORMATION :
BAKER SILO INC.
concrete water reservoirs & storage tanks
P.O. BOX 979
LYNDEN, WA. 98264
(360) 354-4940

ANVIL Engineering & Procurement Solutions
1675 W. BAKERVIEW RD.
BELLINGHAM, WA. 98226
(360) 671-1450

REV.	DATE	DESCRIPTION	BY	CHKD	ENGR	CLIENT	DWG. NO.	REFERENCE DRAWINGS
0	06/24	ISSUE FOR CONSTRUCTION	ENS	GVW				

BAKER SILO, LLC
RESERVOIR
TYPICAL DETAILS

SCALE	JOB NO.	ACCT. CODE	AREA	DRAWING NO.	REV.
Noted	107749	620-24		DR-107749-SD-6001	0

NOTE:

BAKER SILO DETAILS SHOWN FOR BIDDING PURPOSES ONLY

Call 811 two business days before you dig

SHEET 109 OF 226

BID SET

CAD NO.

NO.	REVISIONS	INT.	APP.	DATE

ACTION	BY	DATE
DESIGNED	SDS	04/03/2025
DRAWN	SD	04/03/2025
CHECKED (FIELD)		
CHECKED (HDQTS.)		

STEVEN DENNIS SCHMITZ
STATE OF WASHINGTON
48228
REGISTERED PROFESSIONAL ENGINEER
04-03-2025

REGISTERED STAMP

WASHINGTON STATE PARKS AND RECREATION COMMISSION

NISQUALLY STATE PARK

PHASE 3A MAINTENANCE BUILDING AND WWTF RESERVOIR DETAILS C3.16

SCALE
NTS

PARKS FILE#

I:\2019\10181900030 – Nisqually State Park\CADD\DWG\PHASE 3\C3.12 THRU C3.16 – UTILITY DETAILS.dwg
Apr-09-25 10:21am

FILTER HEAD DETAIL

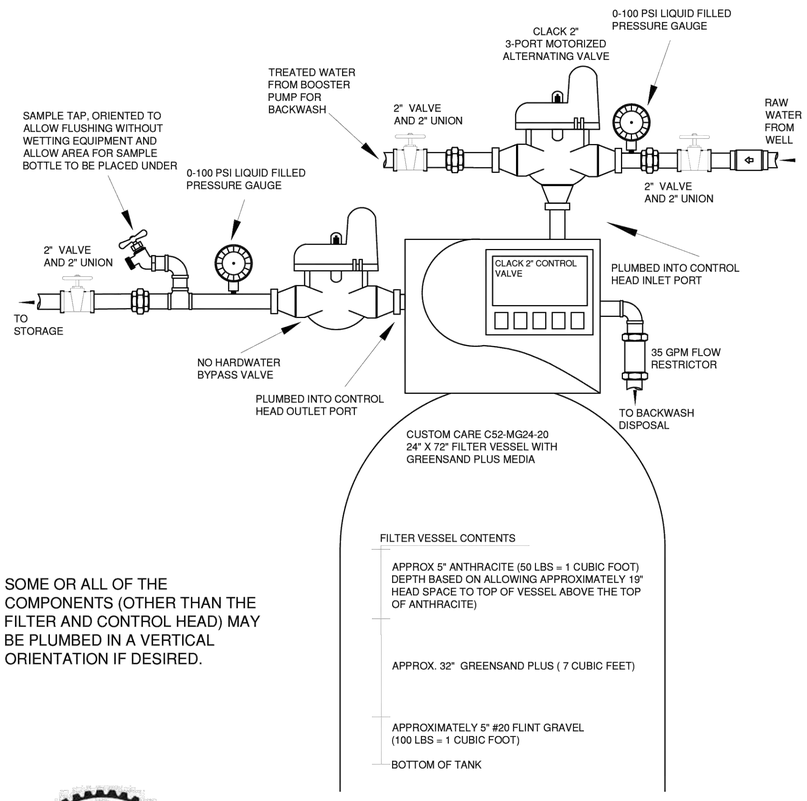

SOME OR ALL OF THE COMPONENTS (OTHER THAN THE FILTER AND CONTROL HEAD) MAY BE PLUMBED IN A VERTICAL ORIENTATION IF DESIRED.

LYDIA VERMEULEN BOWEN
STATE OF WASHINGTON
21016489
REGISTERED
PROFESSIONAL ENGINEER

SYSTEM NISQUALLY STATE PARK	OWNER WA STATE PARKS
FILE NO. 241004 / FILE NAME FILTER HEAD DETAIL	
DATE DECEMBER 11, 2024	SCALE NTS

NORTHWEST WATER SYSTEMS
DESIGN–CONSULTING–MANAGEMENT
P.O. BOX 123
PORT ORCHARD, WA 98366
(360) 876–0958

REGENERATION WASTE AIR GAP DETAIL

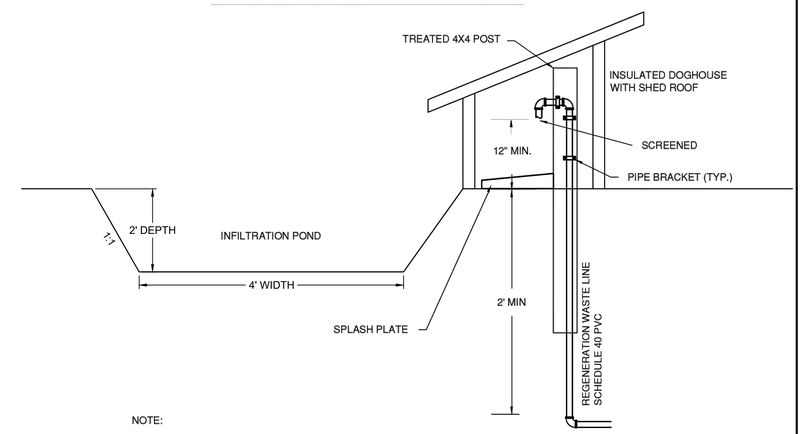

NOTE:

IF NATURAL TOPOGRAPHY WILL ALLOW, THE FOLLOWING CONFIGURATION CAN BE USED
INFILTRATION POND MINIMUM SIZE: 25 FT LONG X 4 FT WIDE X 2 FT DEEP.
SIDE SLOPES SHALL BE 1:1 MAX.

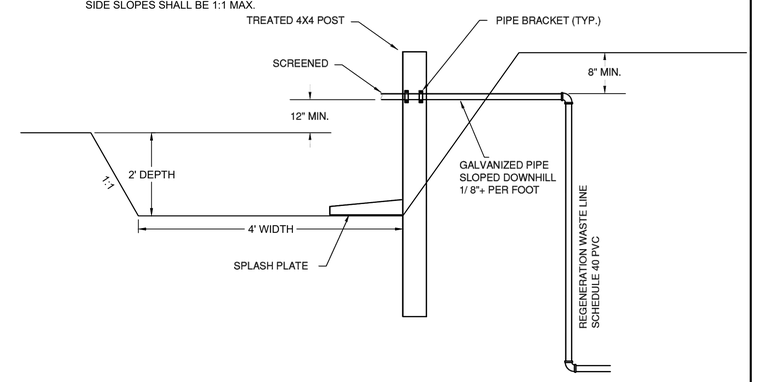

REVISION	
DESCRIPTION	DATE
DRAWN BY:	
CHECKED BY:	

SYSTEM BACKWASH TO INFILTRATION POND AIR-GAP DETAIL	
FILE NO. DETAILS / FILE NAME POND AIR GAP	SHEET NO.
DATE APRIL 29, 2013	SCALE NTS

NORTHWEST WATER SYSTEMS
DESIGN–CONSULTING–MANAGEMENT
P.O. BOX 123
PORT ORCHARD, WA 98366
(360) 876–0958

BID SET

Call 811 two business days before you dig

SHEET 110 OF 226

CAD NO.

NO.	REVISIONS	INT.	APP.	DATE

ACTION	BY	DATE
DESIGNED	SDS	04/03/2025
DRAWN	SD	04/03/2025
CHECKED (FIELD)		
CHECKED (HDQTS.)		

STEVEN DENNIS SCHMITZ
STATE OF WASHINGTON
48228
REGISTERED
PROFESSIONAL ENGINEER
04-03-2025

REGISTERED STAMP

WASHINGTON STATE PARKS AND RECREATION COMMISSION

NISQUALLY STATE PARK

PHASE 3A MAINTENANCE BUILDING AND WWTF WATER TREATMENT DETAILS C3.17

SCALE NTS

PARKS FILE#

I:\2019\1018190030 – Nisqually State Park\CADD\DWG\PHASE 3\C3.12 THRU C3.16 – UTILITY DETAILS.dwg
Apr-09-25 10:21am

WATER MAIN GENERAL NOTES:

1. WATER MAINS SHALL BE AWWA C150 DUCTILE IRON.
2. ALL WATER MAINS SHALL BE DELIVERED FROM THE MANUFACTURER WITH PIPE DUST CAPS INSTALLED. THE CAPS SHALL REMAIN ON THE PIPE UNTIL THE TIME OF INSTALLATION.
3. GATE VALVES SHALL BE RESILIENT WEDGE, NRS (NON RISING STEM) WITH O-RING SEALS. VALVE ENDS SHALL BE MECHANICAL JOINT OR ANSI FLANGES. VALVES SHALL CONFORM TO AWWA C-515 LATEST REVISION. VALVES SHALL BE MUELLER, M & H, KENNEDY, CLOW R/W, WATEROUS SERIES 2500, EJ FLOWMASTER OR AMERICAN AVK.
4. HYDRANTS SHALL BE APPROVED BY THE ENGINEER AS SPECIFIED ON THE HYDRANT DETAILS AND SHALL BE BAGGED UNTIL THE SYSTEM IS APPROVED.
5. THE CONTRACTOR WITH THE ASSISTANCE OF THE INSPECTOR SHALL INSTALL, CHLORINATE AND FILL THE WATER MAIN, INCLUDING APPURTENANCES. TESTING SHALL INCLUDE THE MAIN, VALVES, SERVICE LINES AND APPURTENANCES. AFTER TESTING IS COMPLETED, THE NEWLY CONSTRUCTED SYSTEM SHALL BE FLUSHED. AFTER FLUSHING CHLORINATED WATER FROM DISINFECTED LINES, STATE PARKS SHALL MEASURE CHLORINE RESIDUAL TO VERIFY THAT FLUSHING IS COMPLETE. THIS WILL BE COMPLETED PRIOR TO STATE PARKS TAKING MICROBIOLOGICAL SAMPLES.
6. ALL PIPE AND SERVICES SHALL BE INSTALLED WITH CONTINUOUS TRACER TAPE INSTALLED 12" TO 18" UNDER THE FINAL GROUND SURFACE. THE MARKER SHALL BE PLASTIC NON-BIODEGRADABLE, METAL CORE BACKING MARKED "WATER" WHICH CAN BE DETECTED BY A STANDARD METAL DETECTOR. TAPE SHALL BE 3 INCH WIDE TERRA TAPE "D" OR APPROVED EQUAL. IN ADDITION TO TRACER TAPE, INSTALL DIRECT BURY, U.S.E. 12 GAUGE BLUE COATED COPPER WIRE, WRAPPED AROUND OR TAPED TO THE PIPE, AS SHOWN ON DETAIL. LOW VOLTAGE GREASE-TYPE SPLICE KITS SHALL BE USED ON TRACER WIRE. AFTER THE WIRE NUT IS USED TO CONNECT THE WIRE TOGETHER AN OVERHAND KNOT SHALL BE TIED JUST OUTSIDE THE GREASE KIT TO PREVENT IT FROM COMING APART. CONTINUITY TESTING OF THE WIRE WILL BE DONE BY THE CONTRACTOR.
7. STATE PARKS WILL BE GIVEN 5 DAYS NOTICE PRIOR TO SCHEDULING A SHUTDOWN. WHERE CONNECTIONS REQUIRE "FIELD VERIFICATION", CONNECTION POINTS SHALL BE EXPOSED BY THE CONTRACTOR AND FITTINGS VERIFIED 72 HOURS PRIOR TO DISTRIBUTING SHUT- DOWN NOTICES.
8. SEPARATION BETWEEN WATER AND SEWER SHALL BE MAINTAINED PER DOE STANDARDS.
9. A CONCRETE PAD PER DETAIL SHALL BE INSTALLED AROUND ALL VALVE BOXES AND BLOW-OFFS THAT ARE NOT IN A PAVEMENT AREA.
10. AT ANY CONNECTION TO AN EXISTING LINE WHERE A NEW VALVE IS NOT INSTALLED, THE EXISTING VALVE MUST BE PRESSURE TESTED TO STANDARDS PRIOR TO CONNECTION. IF AN EXISTING VALVE FAILS TO PASS THE TEST, THE CONTRACTOR SHALL MAKE THE NECESSARY PROVISIONS TO TEST THE NEW LINE PRIOR TO CONNECTION TO THE EXISTING SYSTEM OR INSTALL A NEW VALVE.
11. THE TYPICAL MINIMUM BURIAL DEPTH OF ALL WATER LINES SHALL BE 36 INCHES. THE CONTRACTOR SHALL MAINTAIN A MINIMUM OF 18 INCHES OF VERTICAL SEPARATION BETWEEN SANITARY SEWERS/RECLAIMED WATER AND WATER MAINS.
12. IT SHALL BE THE CONTRACTOR'S RESPONSIBILITY TO FIELD VERIFY THE LOCATION AND DEPTH OF THE EXISTING MAIN AND PROVIDE THE FITTINGS REQUIRED TO MAKE THE CONNECTION TO THE EXISTING MAIN.
13. THE CONTRACTOR SHALL INSTALL A TEMPORARY 2 INCH BRASS BLOW OFF FOR FLUSHING AND SAMPLING ON THE EXISTING AND/OR NEW WATER MAIN. THE BLOW OFF SHALL BE CONSTRUCTED WITH A STANDARD 2 INCH TAPPING SADDLE AND FORD BRASS CORPORATION STOP WITH 2 INCH BRASS PIPE EXTENDED UP TO FINISHED GRADE. WHEN FLUSHING AND SAMPLING ARE COMPLETED, THE 2 INCH PIPE SHALL BE REMOVED. THE CORPORATION STOP SHALL BE SHUT OFF AND CAPPED TIGHT WITH A THREADED BRASS CAP.
14. SAND SHALL BE PLACED AROUND AND UNDER SERVICE LINES AND METER BOXES BY HAND TO A HEIGHT OF 6 INCHES ABOVE AND 6 INCHES BELOW THE LINE(S) AND BOXES. EXCAVATION FOR THE METER BOX SHALL BE AN ADDITIONAL ONE FOOT AROUND THE ENTIRE BOX AND BACKFILLED WITH SAND PER DETAIL.
15. ALL VALVE BOX, BLOW-OFF AND MANHOLE LIDS SHALL BE CLEAN AND CLEAR OF ASPHALT OR CONCRETE BEFORE SCHEDULING A WALK THROUGH, AND SHALL BE MARKED "WATER".
16. THE WATER MAIN AND APPURTENANCES AND SERVICE CONNECTIONS TO THE METER SETTER SHALL BE TESTED IN SECTIONS OF CONVENIENT LENGTHS UNDER A HYDROSTATIC PRESSURE EQUAL TO 150 PSI IN EXCESS OF THAT UNDER WHICH IT WILL OPERATE. IN NO CASE SHALL THE TEST PRESSURE BE LESS THAN 150 PSI.
17. ALL WATER MAINS AND SERVICE LINES SHALL BE BEDDED PER DETAIL 1 ON THIS SHEET AND MEET THE PIPE BEDDING SPECIFICATION CHART REQUIREMENTS.
18. ALL BRASS PIPE AND FITTINGS SHALL BE MANUFACTURED IN THE UNITED STATES OF AMERICA AND COMPLY WITH PUBLIC LAW 111-380 (REDUCTION OF LEAD IN DRINKING WATER ACT). IMPORTED BRASS PIPE AND FITTINGS SHALL NOT BE PERMITTED.
19. WHEN USING A HYDRANT METER TO FILL A TANKER TRUCK OR PORTABLE TANK OF ANY KIND, AN APPROVED PERMANENTLY INSTALLED RPBA OR AIR GAP OF AT LEAST TWO TIMES THE INSIDE DIAMETER OF THE FILL PIPE IS REQUIRED. ANY AIR GAP ON TANKER TRUCKS OR PORTABLE TANKS USED WITHIN THE WATER SYSTEM MUST BE INSPECTED ANNUALLY BY A CERTIFIED BACKFLOW ASSEMBLY TESTER (BAT) AND A TYPICAL BACKFLOW PREVENTION TEST REPORT SUBMITTED TO THE CROSS- CONNECTION SPECIALIST.

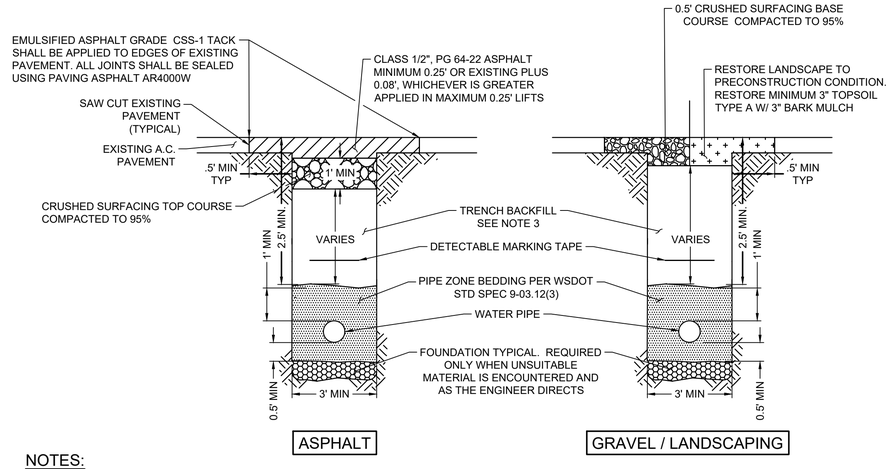

NOTES:

1. ALL MATERIALS, WORKMANSHIP, AND INSTALLATION SHALL BE IN CONFORMANCE WITH THE WSDOT STANDARD SPECIFICATIONS FOR ROAD, BRIDGE AND MUNICIPAL CONSTRUCTION.
2. KEEP TRENCH BOTTOM COMPACTED WITH UNIFORM GRADE. NO TEMPORARY SUPPORTS, I.E. BLOCKS, WILL BE ALLOWED TO SUPPORT PIPE. TRENCH BOTTOM SHALL BE TO GRADE PRIOR TO PIPE INSTALLATION.
3. ALL WATER MAIN SHALL BE INSTALLED WITH CONTINUOUS DETECTABLE MARKING TAPE 12" TO 18" ABOVE PIPE CROWN
4. RESTORATION SHALL BE IN ACCORDANCE WITH ONE OF THE FOLLOWING:
   A. SELECT BACKFILL MEETING THE REQUIREMENTS OF THE STD SPEC 9-03.19 COMPACTED TO 95% DENSITY AND PLACED IN A MAXIMUM 6" LIFTS. WRITTEN VERIFICATION OF COMPACTION, BASED ACCEPTABLE TESTING METHODS, AND PLACEMENT OF THE BACKFILL WILL BE REQUIRED; OR
   B. NATIVE MATERIAL MAY BE USED AS BACKFILL MATERIAL IF IT COMPLIES WITH THE STANDARD SPECIFICATIONS.
5. ALL WATER MAIN SHALL BE HYDROSTATICALLY PRESSURE TESTED AND DISINFECTED MEETING THE REQUIREMENTS OF WSDOT STD SPEC 7-09.3(23).
6. SERVICE CONNECTIONS SHALL BE FLUSHED AND DISINFECTED MEETING THE REQUIREMENTS OF WSDOT STD SPEC 7-15.3(1).

1 WATER TRENCH & RESTORATION DETAILS
SCALE: NTS

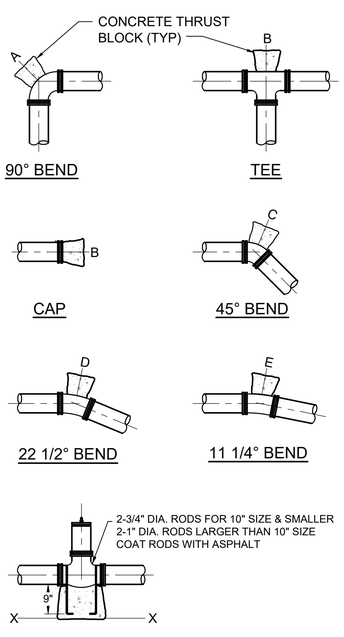

THRUST BLOCK - TABLE						
	MINIMUM BEARING AREA AGAINST UNDISTURBED SOIL SQUARE FEET					
PIPE SIZE	A	B	C	D	E	X
4"	3	2	2	1	NONE	NONE
6"	6	4	3	2	1	NONE
8"	11	8	6	3	2	3
10"	16	11	9	5	3	4
12"	24	17	13	7	4	5
14"	33	23	18	9	5	7
16"	23	23	17	9	5	10

NOTES:

1. THRUST BLOCKS SHALL BE CAST IN PLACE CEMENT CONCRETE WITH MINIMUM 28-DAY COMPRESSIVE STRENGTH OF 3000 PSI.
2. THRUST BLOCKS SHALL BEAR AGAINST FITTINGS ONLY AND BE CLEAR OF JOINTS.

2 HORIZONTAL THRUST BLOCKING DETAILS
SCALE: NTS

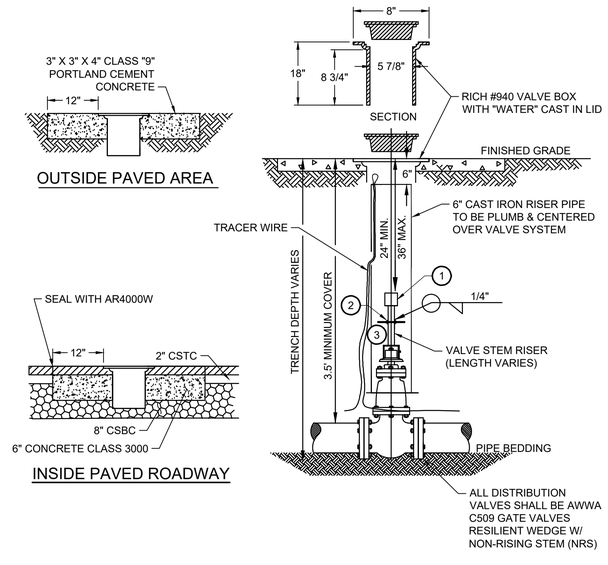

VALVE STEM EXTENSION LEGEND

1. VALVE OPERATING NUT OR 1 7/8" X 1 7/8" X 2" HIGH GRADE STEEL WELDED TO GUIDE PLATE.
2. 3/16" THICK X 5 1/5" DIA STEEL GUIDE PLATE WELDED TO RISER SHAFT.
3. 2" X 2" X 3/16" SQUARE STRUCTURAL STEEL TUBING TO FIT OPERATING NUT. LENGTH AS REQUIRED.

NOTE:

1. WELD ALL AROUND, AS SPECIFIED ABOVE
2. ALL VALVES MUST HAVE 14 GAUGE COATED COPPER TRACER WIRE TIED OFF AT VALVE BODY. EXTENDED OUTSIDE CI RISER PIPE THEN EXTENDED ONE FOOT ABOVE TOP OF VALVE BOX BOTTOM.

3 VALVE BOX DETAIL
SCALE: NTS

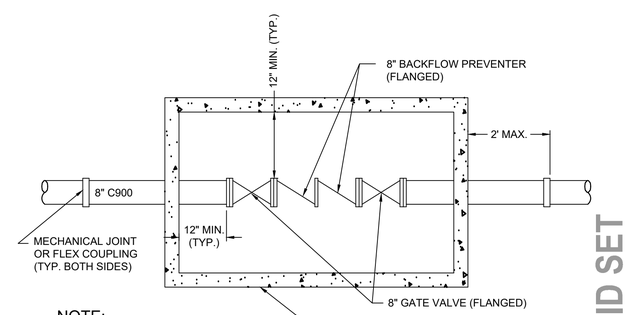

NOTE:

PROVIDE PIPE STANCHION OR CONCRETE BLOCK SUPPORTS BENEATH BACKFLOW PREVENTER & GATE VALVES

4 BACKFLOW PREVENTOR DETAIL
SCALE: NTS

Call 811 two business days before you dig

SHEET 111 OF 226

BID SET

CAD NO.

NO.	REVISIONS	INT.	APP.	DATE

ACTION	BY	DATE
DESIGNED	SDS	04/03/2025
DRAWN	SD	04/03/2025
CHECKED (FIELD)		
CHECKED (HDQTS.)		

STEVEN DENNIS SCHMITZ — STATE OF WASHINGTON — 48228 — REGISTERED PROFESSIONAL ENGINEER
04-03-2025

REGISTERED STAMP

WASHINGTON STATE PARKS AND RECREATION COMMISSION

NISQUALLY STATE PARK

PHASE 3A MAINTENANCE BUILDING AND WWTF WATER DETAILS C3.18

SCALE NTS

PARKS FILE#

I:\2019\1018190030 – Nisqually State Park\CADD\DWG\PHASE 3\C3.12 THRU C3.16 – UTILITY DETAILS.dwg
Apr-09-25 10:21am

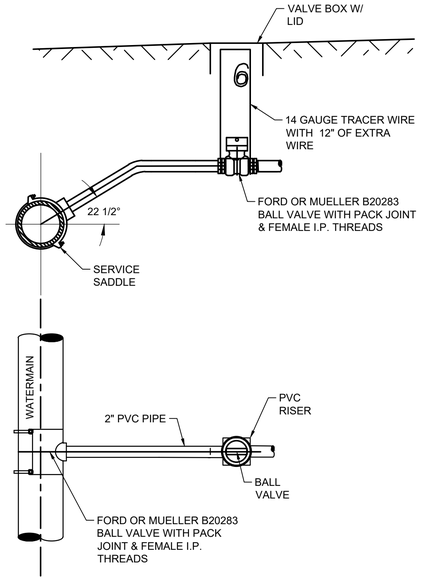

NOTES:

1. STAINLESS STEEL INSERTS REQUIRED FOR ALL PACK JOINTS.
2. ALL SERVICE SADDLES SHALL HAVE RUBBER GASKET AND I.P. THREADS

5 WATER SERVICE CONNECTION DETAIL
SCALE: NTS

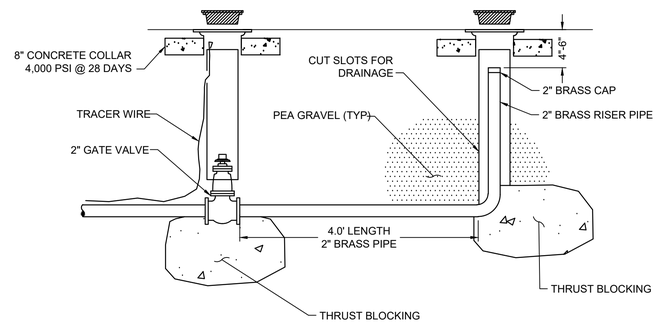

6 2" BLOWOFF DETAIL
SCALE: NTS

CUT-IN-TEE

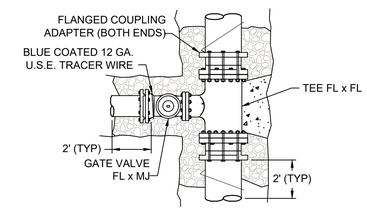

NOTES:

1. 11 MIL. PLASTIC OR CONSTRUCTION FABRIC SHALL BE WRAPPED AROUND PIPE AND FITTING BEFORE THRUST BLOCK OR CDF BACKFILL ARE POURED.
2. CONTROLLED DENSITY FILL SHALL CONSIST OF 1750# SAND, 1750# PEA GRAVEL, 230# WATER, 141# CEMENT, 6 OUNCES WATER REDUCING AGENT PER 100# CEMENT.
3. THE EXISTING LINE, TAPPING SLEEVE AND VALVE SHALL BE SUPPORTED THROUGHOUT THE ENTIRE PROCESS WHEN TAPPING THE EXISTING MAIN.
4. CONNECT TO EXISTING TRACER WIRE, IF PRESENT.
5. CUTTING AC PIPE REQUIRES PROPER AC CUTTING AND DISPOSAL PRACTICES BE FOLLOWED.
6. ADDITIONAL VALVES MAY BE REQUIRED WITH CUT IN TEE

7 CONNECTION TO EXISTING LINE DETAIL
SCALE: NTS

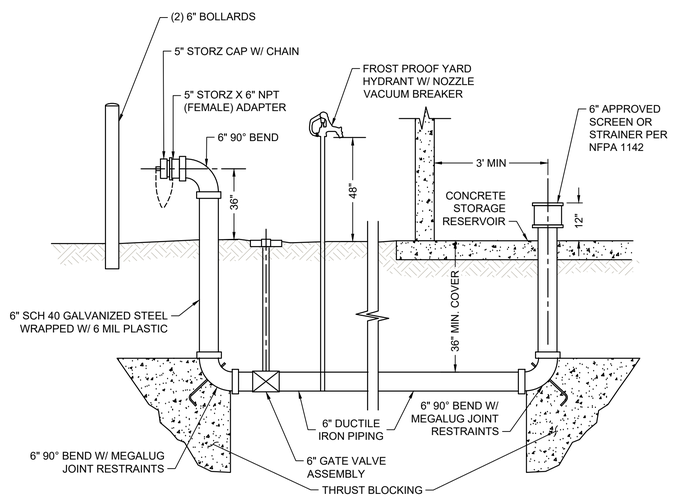

NOTES:

1. DRAFT HYDRANT TO BE CENTERED BETWEEN EXISTING FENCE POSTS. FINAL LOCATION TO BE COORDINATED WITH ENGINEER AND APPROVED BY OWNERS REPRESENTATIVE.
2. ENSURE 36" CLEAR AREA SURROUNDING DRAFT HYDRANT OUTLET.

8 DRAFT HYDRANT DETAIL
SCALE: NTS

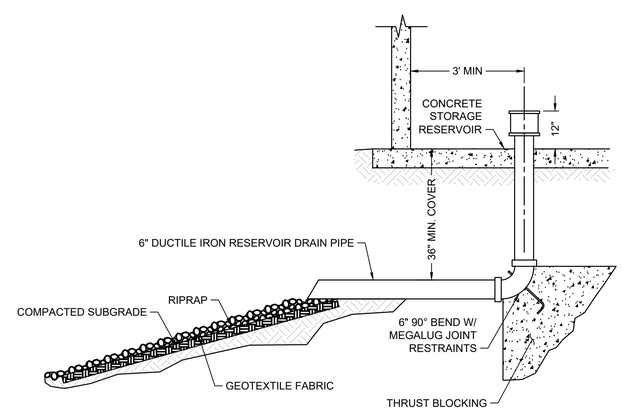

RIP RAP NOTES:

1. RIP RAP SHALL CONFORM WITH WSDOT STD SPEC SECTION 9-13.1
2. RIP RAP SHALL BE REASONABLY WELL GRADED ASSORTMENT OF ROCK WITH THE FOLLOWING GRADATION:

   MAXIMUM STONE SIZE = 18"
   MEDIAN STONE SIZE = 12"
   MINIMUM STONE SIZE = 6"

3. ARMOR SHALL BE A MINIMUM OF 5' EACH SIDE OF OUTFALL.

9 RESERVOIR DRAIN AND OUTFALL DETAIL
SCALE: NTS

Call 811 two business days before you dig

SHEET 112 OF 226

BID SET

CAD NO.

NO.	REVISIONS	INT.	APP.	DATE

ACTION	BY	DATE
DESIGNED	SDS	04/03/2025
DRAWN	SD	04/03/2025
CHECKED (FIELD)		
CHECKED (HDQTS.)		

STEVEN DENNIS SCHMITZ — STATE OF WASHINGTON — 48228 — REGISTERED PROFESSIONAL ENGINEER — 04-03-2025

REGISTERED STAMP

WASHINGTON STATE PARKS AND RECREATION COMMISSION

NISQUALLY STATE PARK

PHASE 3A MAINTENANCE BUILDING AND WWTF WATER DETAILS C3.19

SCALE NTS

PARKS FILE#

I:\2019\1018190030 - Nisqually State Park\CADD\DWG\PHASE 3\C3.12 THRU C3.16 - UTILITY DETAILS.dwg
Apr-09-25 10:21am

GRAVITY SANITARY SEWER MAIN GENERAL NOTES:

1. ALL WORKMANSHIP AND MATERIALS SHALL BE IN ACCORDANCE WITH THE LATEST EDITION OF THE STATE OF WASHINGTON STANDARD SPECIFICATIONS FOR ROAD, BRIDGE AND MUNICIPAL CONSTRUCTION (WSDOT/APWA).
2. IF CONSTRUCTION IS TO TAKE PLACE IN THE RIGHT-OF-WAY, THE CONTRACTOR SHALL NOTIFY PIERCE COUNTY AND OBTAIN ALL THE REQUIRED CONSTRUCTION RIGHT-OF-WAY PERMITS.
3. THE CONTRACTOR SHALL BE FULLY RESPONSIBLE FOR THE LOCATION AND PROTECTION OF ALL EXISTING UTILITIES. THE CONTRACTOR SHALL VERIFY ALL UTILITY LOCATIONS PRIOR TO CONSTRUCTION BY CALLING THE UNDERGROUND LOCATE LINE AT 1-800-424-5555 A MINIMUM OF 48 HOURS PRIOR TO ANY EXCAVATIONS.
4. GRAVITY SEWER MAIN SHALL BE PVC, ASTM D 3034 SDR 35 OR ASTM F 789 WITH JOINTS AND RUBBER GASKETS CONFORMING TO ASTM D 3212 AND ASTM F 477.
5. PRECAST MANHOLES SHALL MEET THE REQUIREMENTS OF ASTM C 478. MANHOLES SHALL BE TYPE 1-48" MANHOLE OR LARGER UNLESS OTHERWISE SPECIFIED ON THE PLANS. JOINTS SHALL BE RUBBER GASKETED CONFORMING TO ASTM C 443 AND SHALL BE GROUTED FROM THE INSIDE. LIFT HOLES SHALL BE GROUTED FROM THE OUTSIDE AND INSIDE OF THE MANHOLE.
6. SIDE SEWER SERVICES SHALL BE PVC, ASTM D 3034 SDR 35 WITH FLEXIBLE GASKETED JOINTS. SIDE SEWER CONNECTIONS SHALL BE MADE BY A TAP TO AN EXISTING MAIN OR A WYE BRANCH FROM A NEW MAIN.
7. ALL SEWER MAINS SHALL BE FIELD STAKED FOR GRADES AND ALIGNMENT BY A LICENSED ENGINEERING OR SURVEYING FIRM QUALIFIED TO PERFORM SUCH WORK.
8. BEDDING OF THE SEWER MAIN AND COMPACTION OF THE BACKFILL MATERIAL SHALL BE REQUIRED IN ACCORDANCE WITH THE ABOVE MENTIONED SPECIFICATION (SEE NOTE 1).
9. TEMPORARY STREET PATCHING SHALL BE ALLOWED BY THE ENGINEER. TEMPORARY STREET PATCHING SHALL BE PROVIDED BY PLACEMENT AND COMPACTION OF ONE INCH MAXIMUM ASPHALT CONCRETE COLD MIX. CONTRACTOR SHALL BE RESPONSIBLE FOR MAINTENANCE AS REQUIRED.
10. EROSION CONTROL MEASURES SHALL BE TAKEN BY THE CONTRACTOR DURING CONSTRUCTION TO PREVENT INFILTRATION OF EXISTING AND PROPOSED STORM DRAINAGE FACILITIES AND ROADWAYS.
11. PROVIDE TRAFFIC CONTROL PLAN(S) IN ACCORDANCE WITH THE MANUAL ON UNIFORM TRAFFIC CONTROL DEVICES (MUTCD) AS REQUIRED.
12. IT SHALL BE THE RESPONSIBILITY OF THE CONTRACTOR TO HAVE A COPY OF THESE APPROVED PLANS ON THE CONSTRUCTION SITE AT ALL TIMES.
13. ANY CHANGES TO THE DESIGN SHALL FIRST BE REVIEWED AND APPROVED BY THE PROJECT ENGINEER AND WASHINGTON STATE PARKS.
14. ALL LINES SHALL BE CLEANED AND PRESSURE TESTED IN CONFORMANCE WITH THE ABOVE REFERENCED SPECIFICATIONS (SEE NOTE 1). A WATER TEST OF ALL MANHOLES IS ALSO REQUIRED. TESTING SHALL TAKE PLACE AFTER ALL UNDERGROUND UTILITIES ARE INSTALLED AND COMPACTION OF THE ROADWAY SUBGRADE IS COMPLETED.
15. PRIOR TO BACKFILL, ALL MAINS AND APPURTENANCES SHALL BE INSPECTED AND APPROVED BY THE ENGINEER. APPROVAL SHALL NOT RELIEVE THE CONTRACTOR FOR CORRECTION OF ANY DEFICIENCIES AND/OR FAILURES AS DETERMINED BY SUBSEQUENT TESTING AND INSPECTIONS.

PRESSURE SANITARY SEWER GENERAL NOTES:

1. ALL WORKMANSHIP AND MATERIALS SHALL BE IN ACCORDANCE WITH THE MOST CURRENT COPY OF THE STATE OF WASHINGTON STANDARD SPECIFICATIONS FOR ROAD, BRIDGE AND MUNICIPAL CONSTRUCTION (WSDOT/APWA). IN CASES OF CONFLICT, THE MOST STRINGENT STANDARD SHALL APPLY.
2. IF CONSTRUCTION IS TO TAKE PLACE IN THE RIGHT-OF-WAY, THE CONTRACTOR SHALL NOTIFY PIERCE COUNTY AND OBTAIN ALL THE REQUIRED CONSTRUCTION RIGHT-OF-WAY PERMITS.
3. A PRE-CONSTRUCTION MEETING SHALL BE HELD WITH THE PROJECT ENGINEER AND WASHINGTON STATE PARKS PRIOR TO THE START OF CONSTRUCTION.
4. ANY CHANGES TO THE DESIGN SHALL FIRST BE REVIEWED AND APPROVED BY THE PROJECT ENGINEER AND WASHINGTON STATE PARKS.
5. THE CONTRACTOR SHALL BE RESPONSIBLE FOR ALL TRAFFIC CONTROL IN ACCORDANCE WITH THE WSDOT/APWA STANDARD PLANS FOR ROADS, BRIDGE, AND MUNICIPAL CONSTRUCTION (ALL APPLICABLE "K" PLANS) AND/OR THE MANUAL ON THE UNIFORM TRAFFIC CONTROL DEVICES (MUTCD). PRIOR TO DISRUPTION OF ANY TRAFFIC, TRAFFIC CONTROL PLANS SHALL BE PREPARED AND SUBMITTED TO WASHINGTON STATE PARKS FOR APPROVAL. NO WORK SHALL COMMENCE UNTIL ALL APPROVED TRAFFIC CONTROL IS IN PLACE.
6. THE CONTRACTOR SHALL BE FULLY RESPONSIBLE FOR THE LOCATION AND PROTECTION OF ALL EXISTING UTILITIES. THE CONTRACTOR SHALL VERIFY ALL UTILITY LOCATIONS PRIOR TO CONSTRUCTION BY CALLING THE UNDERGROUND LOCATE LINE 1-800-424-5555 A MINIMUM OF 48 HOURS PRIOR TO ANY EXCAVATION.
7. PRESSURE SEWER SHALL HAVE A MINIMUM COVER OF 36 INCHES UNLESS OTHERWISE NOTED OR REQUIRED AT UTILITY CROSSINGS.
8. PIPE SEPARATION AND ENCASEMENT REQUIREMENTS AT WATER AND SEWER PIPE CROSSING SHALL BE PROVIDED PER DOE STANDARDS.
9. BEDDING OF THE PRESSURE SEWER MAIN AND COMPACTION OF THE BACKFILL MATERIAL SHALL BE REQUIRED. BEDDING MATERIAL SHALL BE CLEAN 5/8" MINUS SAND/GRAVEL MIXTURE FREE FROM ORGANIC MATTER (SEE NOTE 1).
10. A 3 FOOT SQUARE X 8 INCH THICK CONCRETE PAD WITH #4 REBAR SHALL BE INSTALLED AROUND ALL VALVES THAT ARE NOT IN A PAVEMENT AREA.
11. UNLESS OTHERWISE NOTED ON THE PLANS; PRESSURE MAINS LESS THAN 4 INCHES IN DIAMETER SHALL BE PVC, SDR 21 ASTM D2241, WITH RUBBER GASKET JOINTS OR WELDED POLY (HDPE) PIPE SHALL BE HIGH DENSITY ASTM D 3350, SDR 11 3408 SOCKET WELDED OR BUTT FUSION WELDED. HDPE PIPE SHALL BE SIZED BY INSIDE DIAMETER. PIPING FOR SEWER LINES SHALL BE GREEN, WHITE OR BLACK. HDPE SEWER PIPE SHALL HAVE A GREEN STRIPE MANUFACTURED ON THE PIPE.
12. FITTINGS FOR PRESSURE MAINS FROM 2 INCHES TO 12 INCHES IN DIAMETER SHALL BE DUCTILE IRON AWWA C151 CLASS 50 WITH EPOXY COATING OR PE LINING AND DESIGNED FOR USE WITH CORROSIVE MATERIALS.
13. VALVES FOR PRESSURE MAINS GREATER THAN 2 INCHES SHALL BE RESILIENT WEDGE GATE VALVES WITH AN EPOXY COATING TO RESIST CORROSION.
14. ALL PLASTIC PIPE AND SERVICES SHALL BE INSTALLED WITH CONTINUOUS TRACER TAPE INSTALLED 12 INCHES TO 18 INCHES UNDER THE PROPOSED FINISHED SUB GRADE. THE MARKER SHALL BE PLASTIC NON-BIODEGRADABLE, METAL CORE OR BACKING MARKED SEWER WHICH CAN BE DETECTED BY A STANDARD METAL DETECTOR. IN ADDITION, PRESSURE MAINS SHALL BE INSTALLED WITH 12 GAUGE DIRECT BURY, U.S.E. GREEN COATED COPPER WIRE WRAPPED AROUND ALL PLASTIC PIPE, BROUGHT UP AND TIED OFF AT VALVE BODIES. TAPE SHALL BE TERRA TAPE "D" OR APPROVED EQUAL. THE TAPE AND WIRE SHALL BE FURNISHED BY THE CONTRACTOR.
15. PRIOR TO ACCEPTANCE OF THE PROJECT THE PRESSURE MAINLINE AND SERVICE LINES SHALL BE SUBJECT TO A HYDROSTATIC PRESSURE TEST OF 200 POUNDS FOR 15 MINUTES AND ANY LEAKS OR IMPERFECTIONS DEVELOPING UNDER SAID PRESSURE SHALL BE REMEDIED BY THE CONTRACTOR. NO AIR WILL BE ALLOWED IN THE LINE. THE MAIN SHALL BE TESTED BETWEEN VALVES. INSOFAR AS POSSIBLE, NO HYDR0STATIC PRESSURE SHALL BE PLACED AGAINST THE OPPOSITE SIDE OF THE VALVE BEING TESTED. THE PRESSURE TEST SHALL BE MAINTAINED WHILE THE ENTIRE INSTALLATION IS INSPECTED.
16. PRIOR TO BACKFILL, ALL MAINS AND APPURTENANCES SHALL BE INSPECTED AND APPROVED BY THE PROJECT ENGINEER. APPROVAL SHALL NOT RELIEVE THE CONTRACTOR FOR CORRECTION OF ANY DEFICIENCIES AND/OR FAILURES AS DETERMINED BY SUBSEQUENT TESTING AND INSPECTIONS. IT SHALL BE THE CONTRACTOR'S RESPONSIBILITY TO NOTIFY THE PROJECT ENGINEER FOR THE REQUIRED INSPECTIONS.

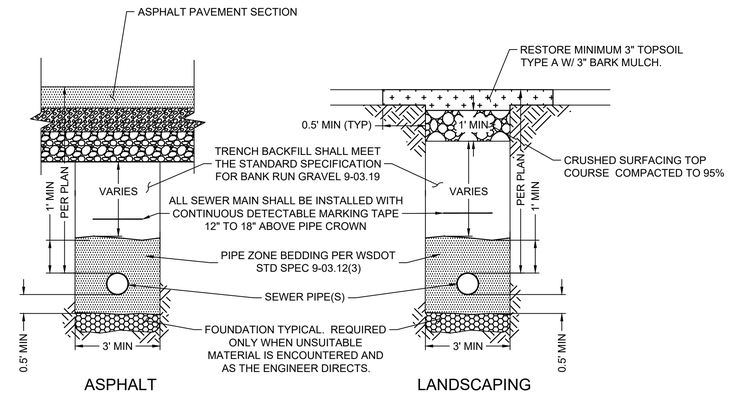

NOTES:

1. ALL MATERIALS, WORKMANSHIP, AND INSTALLATION SHALL BE IN CONFORMANCE WITH THE WSDOT STANDARD SPECIFICATIONS FOR ROAD, BRIDGE AND MUNICIPAL CONSTRUCTION.
2. KEEP TRENCH BOTTOM COMPACTED WITH UNIFORM GRADE. NO TEMPORARY SUPPORTS, I.E. BLOCKS, WILL BE ALLOWED TO SUPPORT PIPE. TRENCH BOTTOM SHALL BE TO GRADE PRIOR TO PIPE INSTALLATION.
3. RESTORATION SHALL BE IN ACCORDANCE WITH ONE OF THE FOLLOWING:
   A. SELECT BACKFILL MEETING THE REQUIREMENTS OF THE STD SPEC 9-03.19 COMPACTED TO 95% DENSITY AND PLACED IN A MAXIMUM 6" LIFTS. WRITTEN VERIFICATION OF COMP ACTION, BASED ACCEPTABLE TESTING METHODS, AND PLACEMENT OF THE BACKFILL WILL BE REQUIRED; OR
   B. NATIVE MATERIAL MAY BE USED AS BACKFILL MATERIAL IF IT COMPLIES WITH THE STANDARD SPECIFICATIONS

1 GRAVITY SEWER TRENCH & RESTORATION DETAILS
SCALE: NTS

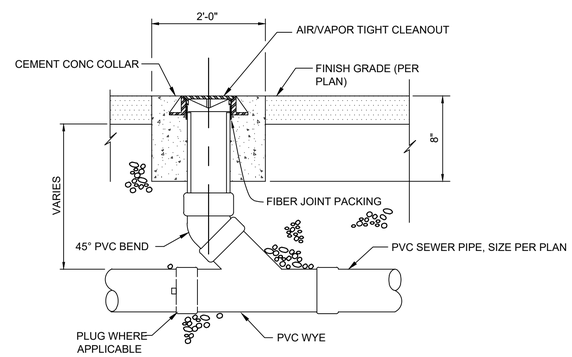

2 SEWER CLEANOUT DETAIL
SCALE: NTS

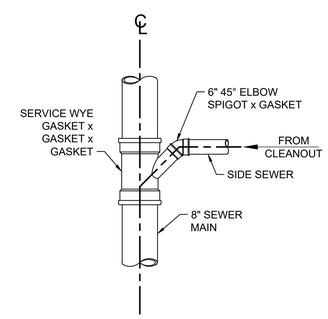

3 SIDE SEWER CONNECTION DETAIL
SCALE: NTS

Call 811 two business days before you dig

SHEET 113 OF 226

BID SET

CAD NO.

NO.	REVISIONS	INT.	APP.	DATE

ACTION	BY	DATE
DESIGNED	SDS	04/03/2025
DRAWN	SD	04/03/2025
CHECKED (FIELD)		
CHECKED (HDQTS.)		

STEVEN DENNIS SCHMITZ — STATE OF WASHINGTON — 48228 — REGISTERED PROFESSIONAL ENGINEER — 04-03-2025

REGISTERED STAMP

WASHINGTON STATE PARKS AND RECREATION COMMISSION

NISQUALLY STATE PARK

PHASE 3A MAINTENANCE BUILDING AND WWTF

SEWER DETAILS C3.20

SCALE NTS

PARKS FILE#

I:\2019\1018190030 - Nisqually State Park\CADD\DWG\PHASE 3\C3.12 THRU C3.16 - UTILITY DETAILS.dwg
Apr-09-25 10:21am

DRAWN BY: LISA CYFORD

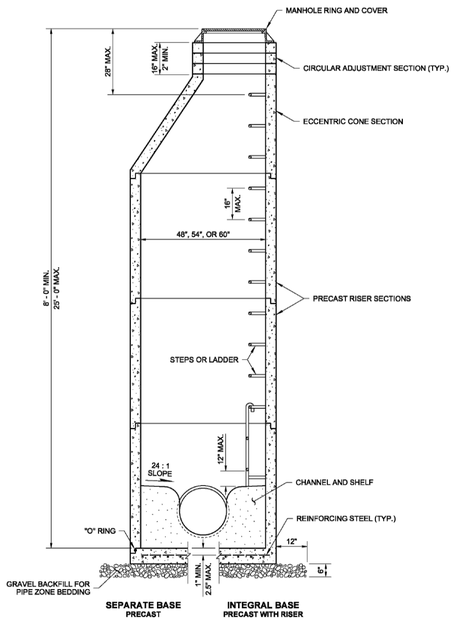

4 MANHOLE - TYPE 1
SCALE: NTS

NOTES

1. Knockouts shall have a wall thickness of 2" minimum to 2.5" maximum.
2. For pipe allowances, see **Standard Plan B-10.20.**

MANHOLE DIMENSION TABLE

DIAM.	MIN. WALL THICKNESS	MIN. BASE THICKNESS	MAXIMUM KNOCKOUT SIZE	MINIMUM DISTANCE BETWEEN KNOCKOUTS
48"	4"	6"	36"	8"
54"	4.5"	8"	42"	8"
60"	5"	8"	48"	8"

CARRY M. KRAMER STATE OF WASHINGTON 44535 REGISTERED PROFESSIONAL ENGINEER

THIS DOCUMENT WAS PREPARED BY OR UNDER THE DIRECT SUPERVISION OF AN ENGINEER LICENSED IN THE STATE OF WASHINGTON. THE ENGINEER'S SEAL AND SIGNATURE ON THIS DOCUMENT INDICATES THAT IT WAS PREPARED BY OR UNDER THE DIRECT SUPERVISION OF THE ENGINEER WHO IS RESPONSIBLE FOR ITS CONTENTS.

MANHOLE TYPE 1

STANDARD PLAN B-15.20-01

SHEET 1 OF 1 SHEET

APPROVED FOR PUBLICATION

Pasco Bakotich III *02-07-12*

STATE DESIGN ENGINEER DATE

Washington State Department of Transportation

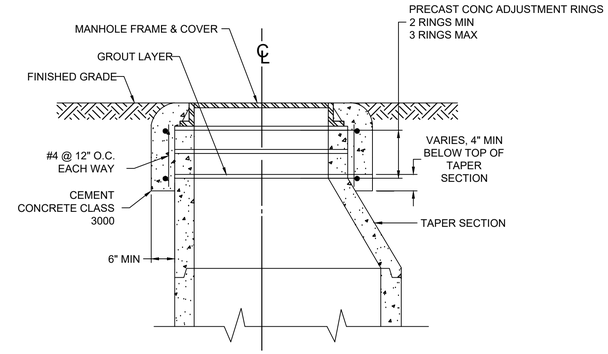

SECTION

NOTE:

CONSTRUCT CONCRETE COLLARS AROUND ALL MANHOLE FRAMES

5 MANHOLE FRAME COLLAR DETAIL
SCALE: N.T.S

BID SET

Call 811 two business days before you dig

SHEET 114 OF 226

CAD NO.

NO.	REVISIONS	INT.	APP.	DATE

ACTION	BY	DATE
DESIGNED	SDS	04/03/2025
DRAWN	SD	04/03/2025
CHECKED (FIELD)		
CHECKED (HDQTS.)		

STEVEN DENNIS SCHMITZ STATE OF WASHINGTON 48228 REGISTERED PROFESSIONAL ENGINEER
04-03-2025

REGISTERED STAMP

WASHINGTON STATE PARKS AND RECREATION COMMISSION

NISQUALLY STATE PARK

PHASE 3A MAINTENANCE BUILDING AND WWTF

SEWER DETAILS C3.21

SCALE NTS

PARKS FILE#

I:\2019\1018190030 - Nisqually State Park\CADD\DWG\PHASE 3\C3.12 THRU C3.16 - UTILITY DETAILS.dwg
Apr-09-25 10:21am

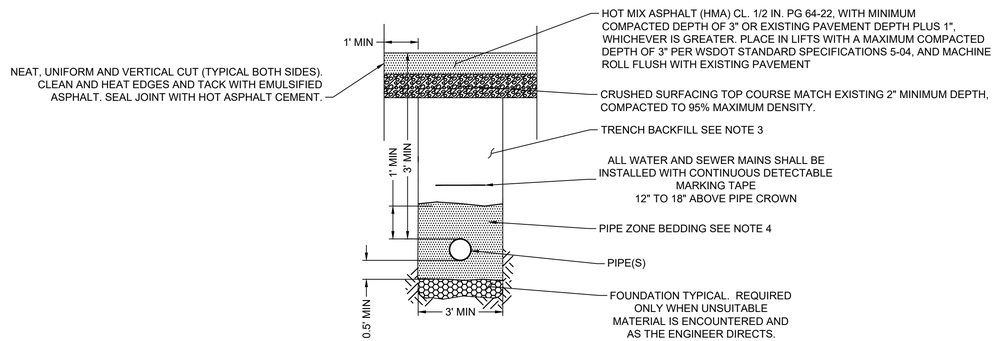

ASPHALT

NOTES:

1. ALL MATERIALS, WORKMANSHIP, AND INSTALLATION SHALL BE IN CONFORMANCE WITH THE WSDOT STANDARD SPECIFICATIONS FOR ROAD, BRIDGE AND MUNICIPAL CONSTRUCTION.

2. KEEP TRENCH BOTTOM COMPACTED WITH UNIFORM GRADE. NO TEMPORARY SUPPORTS, I.E. BLOCKS, WILL BE ALLOWED TO SUPPORT PIPE. TRENCH BOTTOM SHALL BE TO GRADE PRIOR TO PIPE INSTALLATION.

3. RESTORATION SHALL BE IN ACCORDANCE WITH THE FOLLOWING:
IMPORTED OR NATIVE MATERIAL COMPACTED TO 95% MAXIMUM DENSITY. THE MATERIAL SHALL BE ESSENTIALLY FREE FROM VARIOUS TYPES OF WOOD WASTE OR OTHER EXTRANEOUS OR OBJECTIONABLE MATERIALS. IT SHALL HAVE SUCH CHARACTERISTICS OF SIZE AND SHAPE THAT IT WILL COMPACT READILY AND SHALL MEET THE FOLLOWING TEST REQUIREMENTS:

SIEVE SIZE	PERCENT PASSING
4" SQUARE	100
2" SQUARE	75-100
U.S. No. 4	22-100
U.S. No. 200	0-10
DUST RATIO: % PASSING U.S. No. 200 / % PASSING U.S. No. 40	2/3 MAX.
SAND EQUIVALENT	30 MIN.

ALL PERCENTAGES ARE BY WEIGHT.
THE MATERIAL RETAINED ON A U.S. No. 4 SIEVE SHALL CONTAIN NOT MORE THAN 0.20 PERCENT BY WEIGHT OF WOOD WASTE. ANY NATIVE MATERIAL USED SHALL BE TESTED FOR COMPACTION AND/OR GRADATION AS REQUIRED BY THE ENGINEER.

4. BEDDING MATERIAL COMPACTED TO 95% MAXIMUM DENSITY SHALL CONSIST OF CRUSHED, PROCESSED, OR NATURALLY OCCURRING GRANULAR MATERIAL. IT SHALL BE FREE FROM VARIOUS TYPES OF WOOD WASTE OR OTHER EXTRANEOUS OR OBJECTIONABLE MATERIALS. IT SHALL HAVE SUCH CHARACTERISTICS OF SIZE AND SHAPE THAT IT WILL COMPACT AND SHALL MEET THE FOLLOWING SPECIFICATIONS FOR GRADING AND QUALITY:

SIEVE SIZE	PERCENT PASSING
1 1/2" SQUARE	100
1" SQUARE	75-100
5/8" SQUARE	50-100
U.S. NO 4	20-80
U.S. NO 40	3-24
U.S. NO 200	10.0 MAX
SAND EQUIVALENT	35 MIN.

BEDDING MATERIAL FOR SANITARY SEWERS - PEA GRAVEL SHALL BE A CLEAN, SOUND, FREE DRAINING, AND GRANULAR MATERIAL CONFORMING TO THE FOLLOWING GRADATION:

SIEVE SIZE	PERCENT PASSING
3/4" SQUARE	100
3/8" SQUARE	90-100
U.S. NO 4	50-100
U.S. NO 10	0-95
U.S. NO 20	0-85
U.S. NO 40	0-55
U.S. NO 100	0-10
U.S. NO 200	0-3

ALL PERCENTAGES ARE BY WEIGHT

6 TRENCH RESTORATION WITHIN RIGHT-OF-WAY DETAILS
SCALE: NTS

BID SET

Call 811 two business days before you dig

SHEET 115 OF 226

CAD NO.

NO.	REVISIONS	INT.	APP.	DATE

ACTION	BY	DATE
DESIGNED	SDS	04/03/2025
DRAWN	SD	04/03/2025
CHECKED (FIELD)		
CHECKED (HDQTS.)		

STEVEN DENNIS SCHMITZ
STATE OF WASHINGTON
48228
REGISTERED PROFESSIONAL ENGINEER
04-03-2025

REGISTERED STAMP

WASHINGTON STATE PARKS AND RECREATION COMMISSION

NISQUALLY STATE PARK

PHASE 3A MAINTENANCE BUILDING AND WWTF

WATER & SEWER DETAILS C3.22

SCALE
NTS

PARKS FILE#

I:\2019\1018190030 - Nisqually State Park\CADD\DWG\PHASE 3\C3.12 THRU C3.16 - UTILITY DETAILS.dwg
Apr-09-25 10:21am

ELECTRICAL SYMBOLS LEGEND

A/B	DETAIL/SECTION IDENTIFICATION: A = DETAIL/SECTION LETTER, B = SHEET NUMBER WHERE DETAIL/SECTION IS DRAWN.
A/B	EQUIPMENT CONNECTION CALLOUT. A,B EQUAL EQUIPMENT IDENTIFICATION ON MECHANICAL EQUIPMENT CONNECTION SCHEDULES. VERIFY EXACT EQUIPMENT REQUIREMENTS ON APPROVED SHOP DRAWING EQUIPMENT SUBMITTALS PRIOR TO ROUGH-IN. DO NO ROUGH-IN FOR EQUIPMENT PRIOR TO REVIEW OF SUBMITTALS. REPORT ANY DIFFERENCES IN REQUIREMENTS TO ENGINEER IN WRITING.
	CONDUIT CONCEALED. HASH MARKS INDICATE NUMBER OF #12 CONDUCTORS IN CODE SIZE CONDUIT. NO HASH MARKS INDICATES 2-#12 CONDUCTORS PLUS GROUND IN 3/4" CONDUIT, LONG HASH MARKS INDICATES NEUTRAL CONDUCTOR. INDICATES GROUND CONDUCTOR.
	CONDUIT STUBBED AND CAPPED BELOW GRADE.
	FLEXIBLE RACEWAY, PROVIDE GROUND CONDUCTORS PER NEC.
	A-1,3 ADJACENT TO ARROW INDICATES HOMERUN OF CONDUCTORS IN CONDUIT FOR CIRCUITS 1 AND 3 TO PANEL "A".
	LED EXIT LIGHT WITH BATTERY, UNIVERSAL MOUNTING.
	LED FLOODLIGHT WITH BATTERY.
	LED LIGHT FIXTURE, SURFACE MOUNTED ON CEILING.
	LED LIGHT FIXTURE, WITH EMERGENCY BATTERY PACK.
	LED LIGHT FIXTURE, WALL MOUNTED.
	LED LIGHT FIXTURE WALL MOUNT.
A1	LIGHT FIXTURE TYPE. A1 = SPECIFIC LIGHTING FIXTURE REFERENCED ON LIGHTING FIXTURE SCHEDULE.
J	JUNCTION BOX.
	POWER PANEL
	DUPLEX RECEPTACLE 20A, 125 VOLT WALL MOUNTED AT 18 INCHES AFF OR AS NOTED. G = GROUND FAULT INTERRUPTING, C = CEILING MOUNTED.
	DUPLEX RECEPTACLE 20A, 125 VOLT WALL MOUNTED HORIZONTALLY 2" ABOVE BENCH OR COUNTERTOP BACKSPLASH TO THE BOTTOM OF THE RECEPTACLE COVERPLATE.
	FOURPLEX RECEPTACLE 20A, 125 VOLT, WALL MOUNTED AT 18 INCHES AFF OR AS NOTED.
	SPECIAL RECEPTACLE. AMPERAGE AND VOLTAGE AS SHOWN.
Y	EQUIPMENT CONNECTION. PROVIDE PER NEC AND MANUFACTURERS REQUIREMENTS AND/OR RECOMMENDATIONS.
H PHX	SECONDARY POWER HANDHOLE. PHX = IDENTIFICATION.
H CHX	COMMUNICATIONS HANDHOLE. CHX = IDENTIFICATION.
SC	120V (WITH BATTERY BACKUP) COMBINATION SMOKE (PHOTOELECTRIC) AND CARBON MONOXIDE DETECTOR WITH INTEGRAL SOUNDER BASE AND SILENCING SWITCH.
EWH XX	ELECTRIC WALL HEATER IWTH INTEGRAL THERMOSTAT. SUBSCRIPT "XX" INDICATES WATTAGE. KING OR APPROVED EQUAL.
EF	EXHAUST FAN. SEE MECHANICAL PLANS FOR MANUFACTURER/ MODEL INFORMATION.
S	LIGHT SWITCH TOGGLE TYPE, SINGLE POLE, SUBSCRIPTS; 3 = THREE WAY, D = DIMMER CONTROL, a, b, c, ETC = NUMBER OF SWITCHES AT THE LOCATION AND SPECIFIC FIXTURES CONTROLLED. MOUNT AT 42 INCHES AFF.
S_T	DIGITAL 0-12 HOUR TIMER SWITCH. WATTSTOPPER TS-400 OR EQUAL
S_Y	AUTOMATIC/MANUAL OCCUPANCY SENSOR AND SINGLE POLE TOGGLE SWITCH. WATT STOPPER DW-100 OR EQUAL. SWITCH SHALL BE PROGRAMMED FOR MANUAL ON, AUTOMATIC OFF.
S_M	WIRELESS LIGHT SWITCH, SINGLE POLE, SUBSCRIPTS; 3 = THREE WAY, D = DIMMER CONTROL, a, b, c, ETC = NUMBER OF SWITCHES AT THE LOCATION AND SPECIFIC FIXTURES CONTROLLED. MOUNT AT 42 INCHES AFF.
OS	WIRELESS AUTOMATIC OCCUPANCY SENSOR DEVICE.
PS	WIRELESS DAYLIGHT PHOTOSENSOR
	DISCONNECT SWITCH
	FUSED DISCONNECT SWITCH WITH FUSES.
S_m	MOTOR RATED TOGGLE SWITCH WITH OVERLOAD HEATER(S), SIZE PER NEC AND MANUFACTURERS REQUIREMENTS.
T	OHOP UTILITY TRANSFORMER
	GROUND PER NEC.
XXX	AVAILABLE FAULT CURRENT
TVSS	TRANSIENT VOLTAGE SURGE SUPPRESSION. TPS3-X-11-15-D2, SIEMENS OR EQUAL. "X" = VOLTAGE/ PHASE (VARIES), SEE POWER RISER DIAGRAM AND/OR PANEL SCHEDULES FOR VOLTAGE AND PHASE REQUIREMENTS.
WP	WEATHERPROOF (NEMA 3R IN USE)
S	SMOKE DETECTOR (PHOTOELECTRIC).
H	HEAT DETECTOR
F	MANUAL FIRE ALARM PULL STATION. WALL MOUNT AT 42 INCHES AFF.
F XX	FIRE ALARM HORN/ADA STROBE. WALL MOUNT AT 80 INCHES AFF. SUBSCRIPT INDICATES CANDELA LEVEL.
XX	FIRE ALARM MINI ADA STROBE, WALL MOUNT AT 80 INCHES AFF. SUBSCRIPT INDICATES CANDELA LEVEL.
WAP	WIRELESS ACCESS POINT

BID SET

CROSS ENGINEERS, INC
923 MLK Jr. Way
Tacoma, WA 98405
info@crossengineers.com
Phone: (253) 759-0118
Job Number: 20-119

Call 811 two business days before you dig

CAD NO.

NO.	REVISIONS	INT.	APP.	DATE

ACTION	BY	DATE
DESIGNED	SJK	1/03/25
DRAWN	JAE	1/03/25
CHECKED (FIELD)		
CHECKED (HDQTS.)		

STEVEN L. HUBBS STATE OF WASHINGTON 00029060 REGISTERED PROFESSIONAL ENGINEER

REGISTERED STAMP

WASHINGTON STATE PARKS AND RECREATION COMMISSION

NISQUALLY STATE PARK

PHASE 3A MAINTENANCE BUILDING AND WWTF

ELECTRICAL SYMBOLS LEGEND E001

SCALE AS NOTED

PARKS FILE#

LIGHTING FIXTURE SCHEDULE

TYPE	MANUFACTURER	LAMPS	WATTS	MOUNTING
A1	METALUX 4SNLED-LD5-41SL-LW-UNV-L835-CD1-U	LED	35	SURFACE/ CEILING/WALL
A2	OXYGEN 3-537-24	LED	14	WALL
A3	METALUX 4SNLED-LD5-47SL-LW-UNV-L835-CD1-U	LED	41	SURFACE/ CEILING/WALL
A4	METALUX 4BCLED-LD4-28SL-F-UNV-L835-CD1-U	LED	29	WALL
A5	ILP LIGHTING VVT4-4L-U-40-FRL-MWS	LED	24	SURFACE
B1	HALO SMD6R-12-9S-WH-E	LED	15	SURFACE
W1	LUMARK AXCS3A-W-BK-PC1	LED	27	WALL
W1X	SAME AS TYPE W1 WITH EMERGENCY BATTERY PACK			
W2	LUMARK XTOR2B-Y-BK-PC1	LED	18	WALL
X1	SURE-LITES LPX7WSPWG511	INCLUDED	3	UNIVERSAL
X2	SAME AS TYPE X1 WITH DUAL FACE	INCLUDED	3	UNIVERSAL
X3	SURE-LITES SEL50SDSQ	INCLUDED	3	WALL

GENERAL NOTES:

1. DO NOT SCALE ELECTRICAL DRAWINGS. REFER TO ARCHITECTURAL, LANDSCAPE, CIVIL AND STRUCTURAL DRAWINGS AND FIELD MEASUREMENTS TO COORDINATE THE EXACT LOCATION OF ALL ELECTRICAL EQUIPMENT, STRUCTURES, VAULTS, CONDUITS, TRENCHED ETC. NOTIFY ENGINEER IN THE EVENT OF A CONFLICT.
2. SEE SITE PLANS, PARTIAL PLANS AND DETAILS FOR ADDITIONAL CONDUIT AND CONDUCTOR REQUIREMENTS. METALLIC CONDUITS, COUPLINGS AND JOINTS OF METALLIC CONDUITS EMBEDDED IN CONCRETE, EARTH OR ASPHALT SHALL BE 1/2 LAP TAPED 12" PAST JOINTS OR OTHERWISE MADE WATERTIGHT TO PREVENT INTRUSION OF MORTAR, WATER OR OTHER MATERIALS. TEST CONDUIT FOR ABSENCE OF ANY BLOCKAGE PRIOR TO AND WITHIN 24 HOURS OF COMPLETING A CONCRETE POUR OR ASPHALT PAVING.
3. CONTRACTOR SHALL INCLUDE IN THE BID ALL COSTS TO HAVE A DEPARTMENT OF LABOR AND INDUSTRIES APPROVED FIRM TO FIELD EVALUATE THE INSTALLATION, SAFETY, AND COMPLIANCE REQUIRED PER LABOR AND INDUSTRIES ELECTRICAL INSPECTION AND/OR PER W.A.C. 296-46B-901 FOR ANY EQUIPMENT SPECIFIED OR FURNISHED NOT UL LABELED.
4. THERE IS ADDITIONAL ELECTRICAL WORK SHOWN ON THE ARCHITECTURAL, LANDSCAPE, CIVIL, STRUCTURAL AND MECHANICAL DRAWINGS AND DESCRIBED IN THE SPECIFICATIONS. EXTENSIVE COORDINATION IS REQUIRED BY THE CONTRACTOR WITH GOVERNING AUTHORITIES, OTHER CONTRACTORS WORKING ON SITE. CONTRACTOR SHALL REVIEW ALL DRAWINGS AND SPECIFICATION SECTIONS AND INCLUDE COSTS FOR ALL COORDINATION AND RELATED WORK IN THE BID.
5. CONTRACTOR SHALL PROVIDE PULL TAPE IN ALL CONDUIT RUNS WITH POWER CONDUCTORS, COMMUNICATIONS CABLES OR EMPTY. PROVIDE COMPLETE LOOP OF ALL POWER AND COMMUNICATIONS CABLES AROUND ALL FOUR(4) WALLS OF VAULTS, HANDHOLES PRIOR TO CABLE EXITING. FOR POWER CONDUCTORS UPSIZED TO REDUCE VOLTAGE DROP AND LARGER THAN TERMINATION LUGS CONTRACTOR SHALL PROVIDE TERMINAL PINS (FINGER SPLICES) ON WIRE ENDS TO ACCOMMODATE TERMINATION.

BID SET

Call 811 two business days before you dig

CROSS ENGINEERS, INC
923 MLK Jr. Way
Tacoma, WA 98405
info@crossengineers.com
Phone: (253) 759-0118
Job Number: 20-119

CAD NO.

NO.	REVISIONS	INT.	APP.	DATE

ACTION	BY	DATE
DESIGNED	SJK	1/03/25
DRAWN	JAE	1/03/25
CHECKED (FIELD)		
CHECKED (HDQTS.)		

STEVEN L. HUBBS STATE OF WASHINGTON 00290601 REGISTERED PROFESSIONAL ENGINEER

REGISTERED STAMP

WASHINGTON STATE PARKS AND RECREATION COMMISSION

NISQUALLY STATE PARK

PHASE 3A MAINTENANCE BUILDING AND WWTF

LIGHTING FIXTURE SCHEDULE/ GENERAL NOTES E002

SCALE
AS NOTED

PARKS FILE#

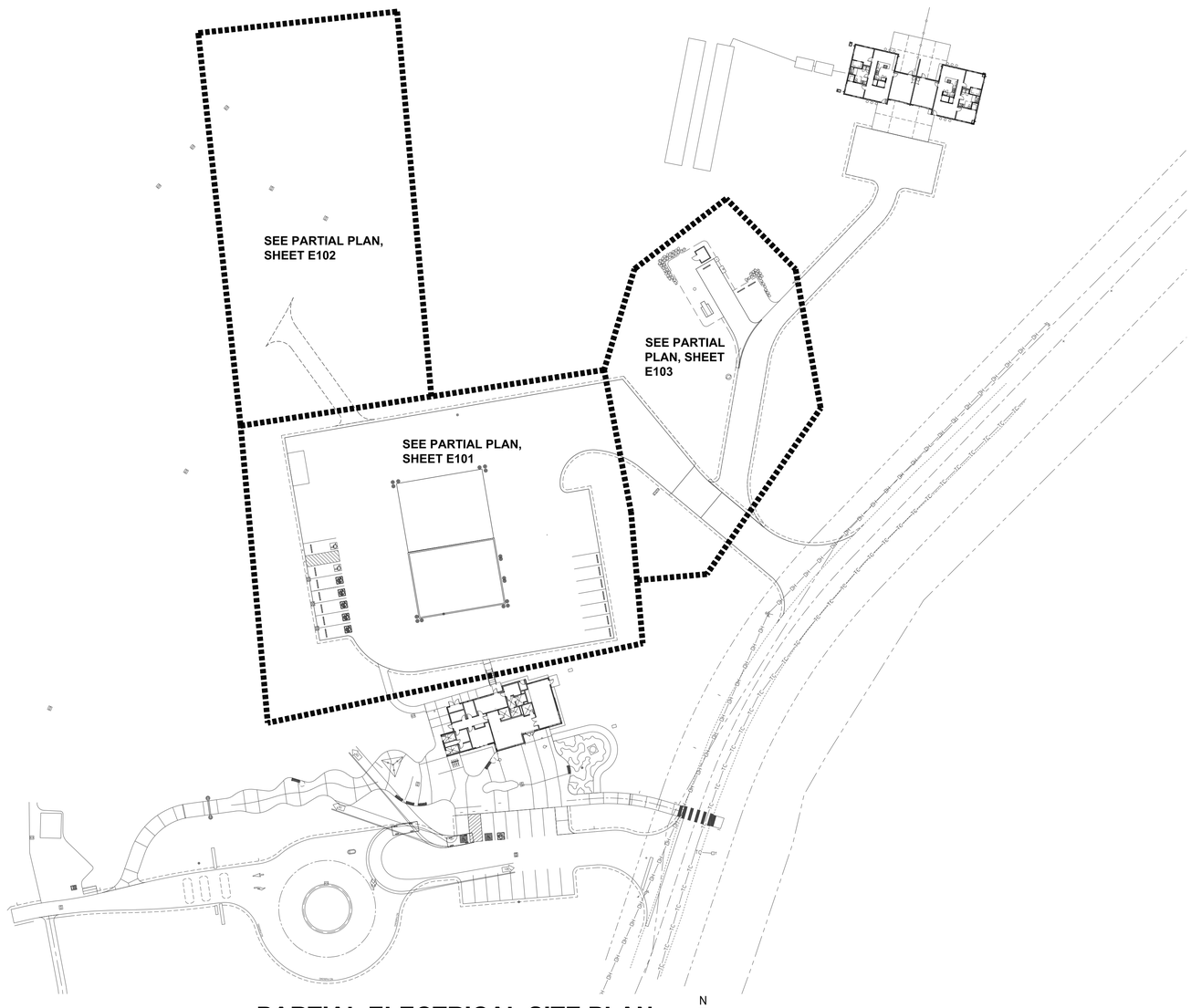

PARTIAL ELECTRICAL SITE PLAN

SCALE: 1"=50'-0"

N

BID SET

N

Call 811 two business days before you dig

CROSS ENGINEERS, INC
923 MLK Jr. Way
Tacoma, WA 98405
info@crossengineers.com
Phone: (253) 759-0118
Job Number: 20-119

SHEET 118 OF 226

CAD NO.

NO.	REVISIONS	INT.	APP.	DATE

ACTION	BY	DATE
DESIGNED	SJK	1/03/25
DRAWN	JAE	1/03/25
CHECKED (FIELD)		
CHECKED (HDQTS.)		

STEVEN L. HUBBS
STATE OF WASHINGTON
00029060
REGISTERED
PROFESSIONAL ENGINEER

REGISTERED STAMP

WASHINGTON STATE PARKS AND RECREATION COMMISSION

NISQUALLY STATE PARK

PHASE 3A MAINTENANCE BUILDING AND WWTF

PARTIAL ELECTRICAL SITE PLAN E100

SCALE

AS NOTED

PARKS FILE#

ELECTRICAL NOTES:

1. PROVIDE LEVEL 2, 30A, DUAL PORT, ELECTRIC VEHICLE CHARGER STATION WITH CONCRETE BASE. BTC POWER #LSP-30-240-16. PROVIDE TWO (2) 1"C-(2)#8 CU & (1)#10 CU GRD TO PANEL AND CIRCUITRY IDENTIFIED.

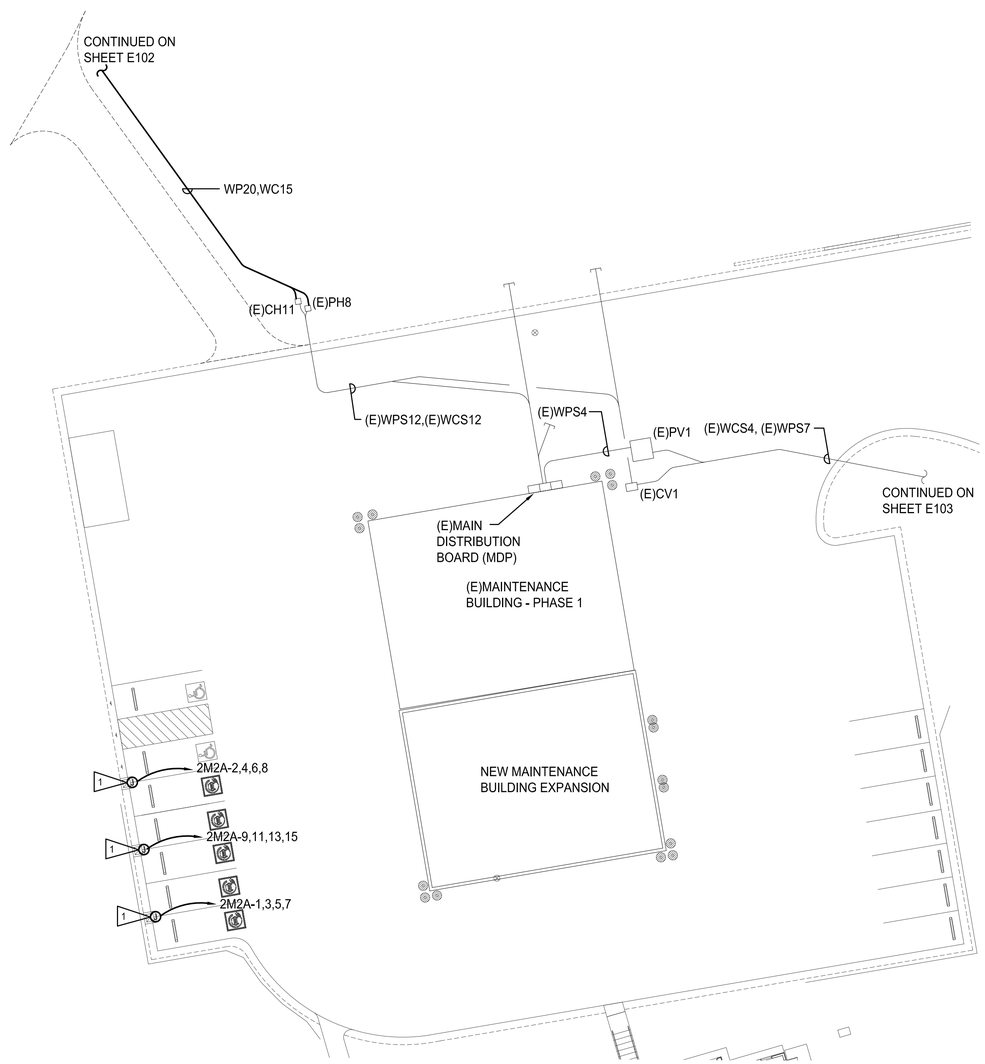

MAINTENANCE BUILDING PARTIAL ELECTRICAL SITE PLAN

SCALE: 1"=20'-0"

N

CROSS ENGINEERS, INC
923 MLK Jr. Way
Tacoma, WA 98405
info@crossengineers.com
Phone: (253) 759-0118
Job Number: 20-119

Call 811 two business days before you dig

SHEET 119 OF 226

BID SET

CAD NO.

NO.	REVISIONS	INT.	APP.	DATE

ACTION	BY	DATE
DESIGNED	SJK	1/03/25
DRAWN	JAE	1/03/25
CHECKED (FIELD)		
CHECKED (HDQTS.)		

STEVEN L. HUBBS
STATE OF WASHINGTON
00029060
REGISTERED PROFESSIONAL ENGINEER

REGISTERED STAMP

WASHINGTON STATE PARKS AND RECREATION COMMISSION

NISQUALLY STATE PARK

PHASE 3A MAINTENANCE BUILDING AND WWTF

MAINTENANCE BUILDING PARTIAL ELECTRICAL SITE PLAN
E101

SCALE
AS NOTED

PARKS FILE#

EXISTING - NEMA 3R

SURFACE MOUNTING
10,000 AIC

PANEL SCHEDULE

NO. **2WH** | LOCATION: WELL HOUSE | SERVING: EQUIPMENT | 120/208 VOLTS 3PHASE 4WIRE | 200 AMPS WITH MAIN LUGS

CKT NO.	LOAD DESCRIPTION	KVA	TRIP AMPS		TRIP AMPS	KVA	LOAD DESCRIPTION	CKT NO.	
1	LIGHTS	.10	20		30	6.30	WELL PUMP (5HP)	2	
3	RECEPTACLES	.54	20					4	
5	JOCKEY PUMP (1.5HP)	2.48	15		3			6	
7					20	.50	GEN. BATTERY CHARGER	8	
9			3		20	1.50	GEN. BLOCK HEATER	10	
11	WALL HEATER	3.00	30		60	11.59	PUMP SKID	12	*
13			2					14	
15	SPACE				3			16	
17					20	2.50	INJECTOR PUMP	18	*
19								20	
21					3			22	
23							SPACE	24	
25					30		TVSS	26	
27								28	
29	SPACE				3			30	

REMARKS: .

CONNECTED LOAD: 28.5 KVA 79 AMPS
DEMAND LOAD: 31.4 KVA 87 AMPS

* NEW CIRCUIT BREAKER

ELECTRICAL NOTES:

1. RELOCATED POWER PANEL, DISCONNECT AND ATS FROM TEMPORARY PUMP HOUSE.
2. CONTRACTOR SHALL PROVIDE 10", REINFORCED, CONCRETE PAD FOR RELOCATED GENERATOR FROM TEMP PUMP HOUSE. CONCRETE PAD SHALL BE 4" ABOVE FINISHED GRADE AND EXTEND 12" PAST FOOTPRINT OF GENERATOR ON ALL FOUR SIDES.
3. CONTRACTOR SHALL PROVIDE 1"C-(3)#12 CU & (1)#12 CU GRD FROM PANEL 2WH, CIRCUITS #8,10 TO GENERATOR FOR BATTERY CHARGER AND BLOCK HEATER CONNECTIONS.
4. PUMP SKID CONTROLLER CONNECTION. PROVIDE 1"C-(4)#6 CU & (1)#10 CU GRD FROM CONTROLLER TO PANEL 2WH, CIRCUITS #12,14,16. FIELD VERIFY ELECTRICAL REQUIREMENTS WITH PUMP SHOP DRAWINGS AND PUMP INSTALLER PRIOR TO ROUGH-IN.
5. CHLORINE INJECTOR PUMP CONNECTION. PROVIDE 3/4"C-(4)#12 CU & (1)#12 CU GRD FROM CONTROLLER TO PANEL 2WH, CIRCUITS #18,20,22. FIELD VERIFY ELECTRICAL REQUIREMENTS WITH PUMP SHOP DRAWINGS AND PUMP INSTALLER PRIOR TO ROUGH-IN.

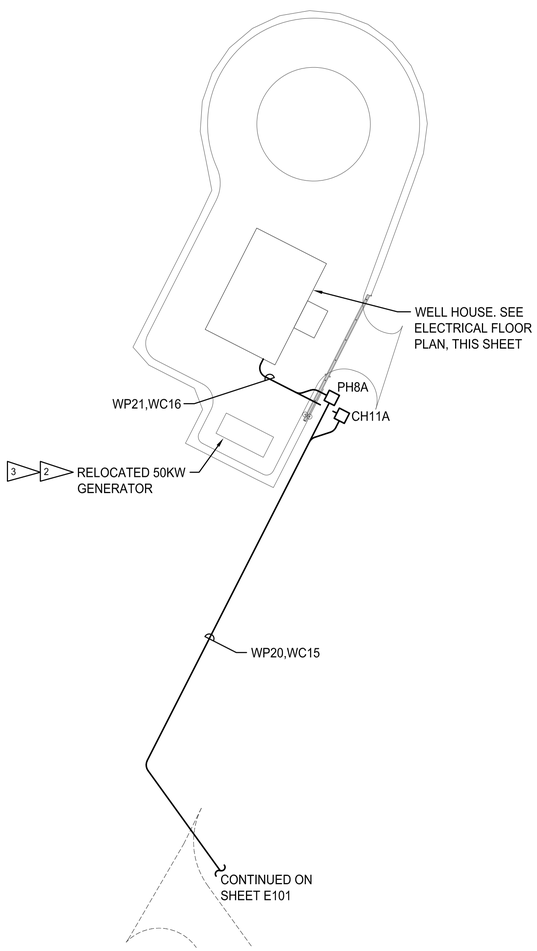

PUMP HOUSE PARTIAL ELECTRICAL SITE PLAN

SCALE: 1"=20'-0"

N

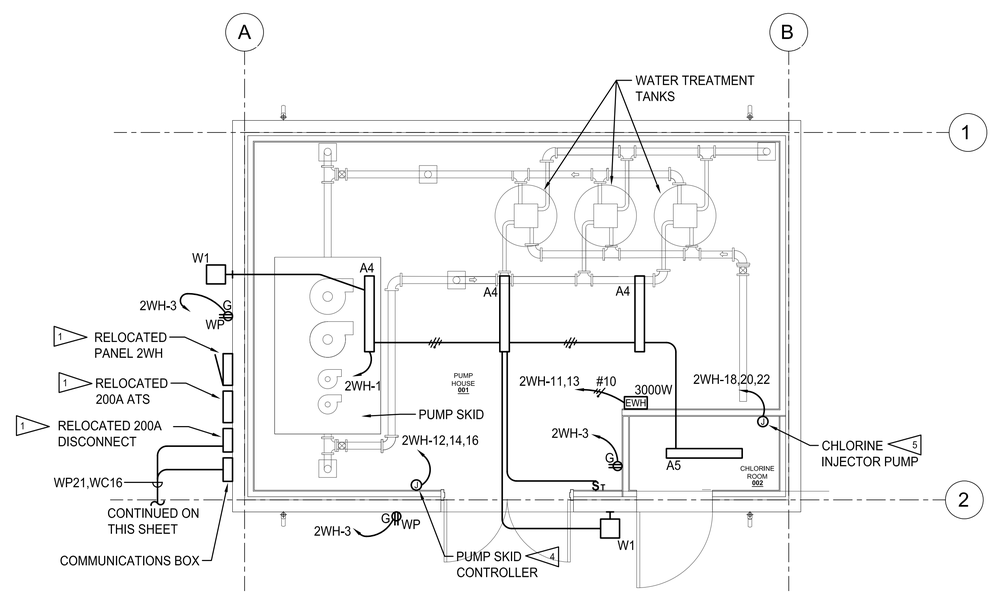

WELL HOUSE ELECTRICAL FLOOR PLAN

SCALE: 1/4"=1'-0"

N

BID SET

Call 811 two business days before you dig

CROSS ENGINEERS, INC
923 MLK Jr. Way
Tacoma, WA 98405
info@crossengineers.com
Phone: (253) 759-0118
Job Number: 20-119

CAD NO.

NO.	REVISIONS	INT.	APP.	DATE

ACTION	BY	DATE
DESIGNED	SJK	1/03/25
DRAWN	JAE	1/03/25
CHECKED (FIELD)		
CHECKED (HDQTS.)		

STEVEN L. HUBBS
STATE OF WASHINGTON
00029060
REGISTERED PROFESSIONAL ENGINEER

REGISTERED STAMP

WASHINGTON STATE PARKS AND RECREATION COMMISSION

NISQUALLY STATE PARK

PHASE 3A MAINTENANCE BUILDING AND WWTF

PUMP HOUSE PARTIAL ELECTRICAL SITE PLAN

E102

SCALE
AS NOTED

PARKS FILE#

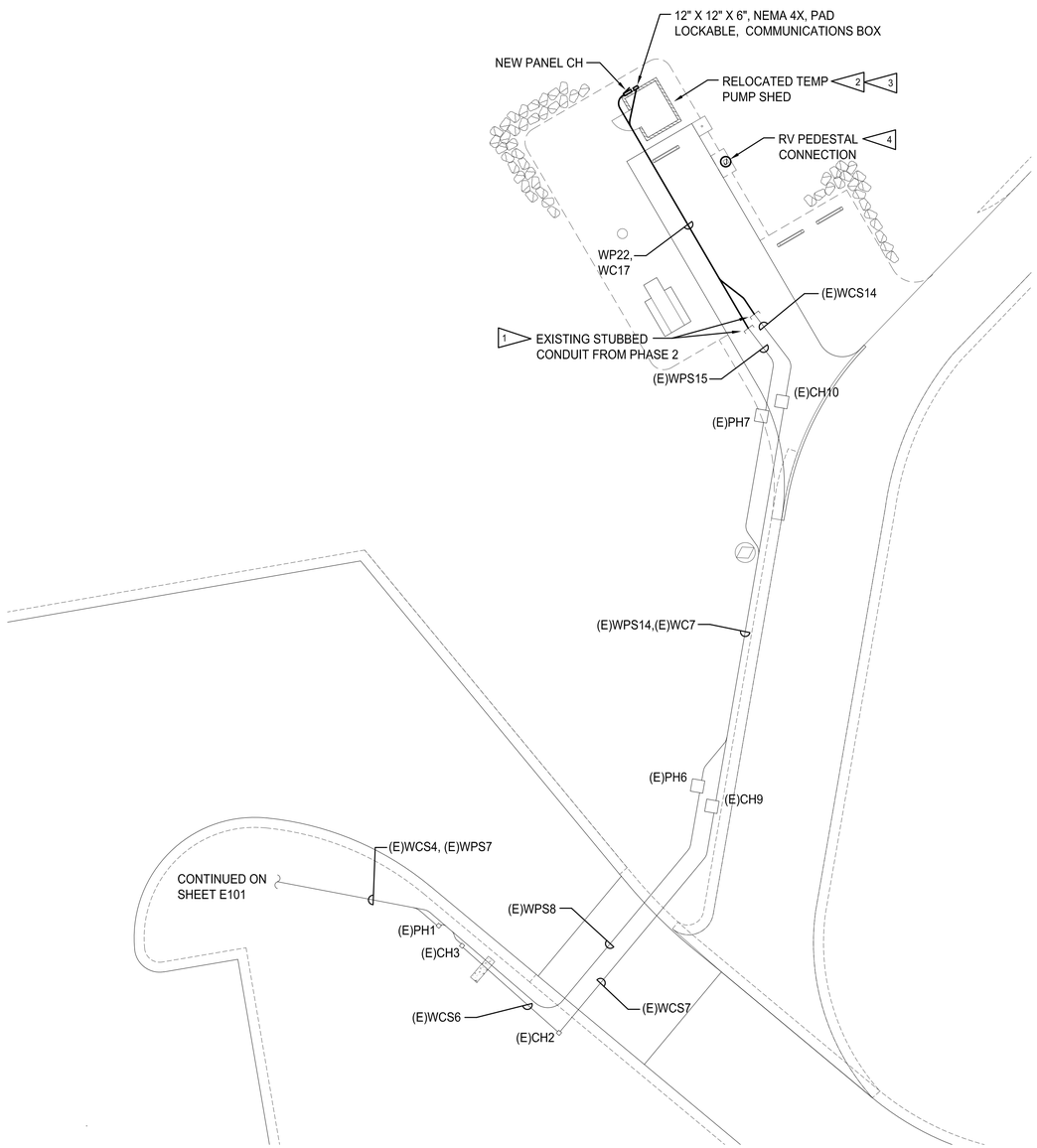

PARTIAL ELECTRICAL SITE PLAN

SCALE: 1"=15'-0"

N

ELECTRICAL NOTES:

1. INTERCEPT EXISTING STUBBED CONDUIT AND EXTEND TO NEW EQUIPMENT AS IDENTIFIED.
2. CONTRACTOR SHALL PROVIDE 125V, 20A, GFI, DUPLEX RECEPTACLE WITHIN RELOCATED TEMP PUMP SHED AND PROVIDE 3/4"C-(2)#12 CU & (1)#12 CU GRD TO NEW PANEL CH, CIRCUIT #2.
3. CONTRACTOR SHALL PROVIDE ONE (1) TYPE A1 LIGHT FIXTURE WITHIN RELOCATED TEMP PUMP SHED WITH SINGLE POLE LIGHT SWITCH AND ONE (1) EXTERIOR MOUNTED TYPE W2 LIGHT FIXTURE LOCATED ADJACENT TO DOOR AT TOP OF HEATER HEIGHT. PROVIDE 3/4"C-(2)#12 CU & (1)#12 CU GRD BETWEEN ALL EQUIPMENT AND CONNECT TO PANEL CH, CIRCUIT #4.
4. CONTRACTOR SHALL PROVIDE RV PEDESTAL, DOCK BOXES UNLIMITED #POWERHOUSE-SS PEDESTAL. PROVIDE 1"C-(3)#6 CU & (1)#10 CU GRD FROM RV PEDESTAL TO PANEL CH, CIRCUITS #1,3. RV PEDESTAL SHALL BE MOUNTED PER DETAIL 8, SHEET C3.1.

NEMA 3R, PROVIDE WITH PAD-LOCKABLE COVER.

SURFACE MOUNTING
10,000 AIC

PANEL SCHEDULE

NO. CH — LOCATION: HOST CAMPSITE — SERVING: HOST CAMPSITE — 120/208 VOLTS 3PHASE 4WIRE — 100 AMPS WITH 100 MAIN BREAKER

CKT NO.	LOAD DESCRIPTION	KVA	TRIP AMPS		TRIP AMPS	KVA	LOAD DESCRIPTION	CKT NO.
1	RV PEDESTAL	12.00	60		20	.18	RECEPTACLE	2
3			2		20	.10	LIGHTS	4
5	SPARE		20		20		SPARE	6
7	SPARE		20				SPACE	8
9	SPACE							10
11								12
13								14
15								16
17								18
19	SPACE						SPACE	20

REMARKS: SERVICE ENTRANCE RATED.

CONNECTED LOAD:	12.3 KVA	35 AMPS
DEMAND LOAD:	12.3 KVA	35 AMPS

BID SET

N

Call 811 two business days before you dig

CROSS ENGINEERS, INC
923 MLK Jr. Way
Tacoma, WA 98405
info@crossengineers.com
Phone: (253) 759-0118
Job Number: 20-119

CAD NO.

NO.	REVISIONS	INT.	APP.	DATE

ACTION	BY	DATE
DESIGNED	SJK	1/03/25
DRAWN	JAE	1/03/25
CHECKED (FIELD)		
CHECKED (HDQTS.)		

STEVEN L. HUBBS — STATE OF WASHINGTON — 00229060 — REGISTERED PROFESSIONAL ENGINEER

REGISTERED STAMP

WASHINGTON STATE PARKS AND RECREATION COMMISSION

NISQUALLY STATE PARK

PHASE 3A MAINTENANCE BUILDING AND WWTF

CAMP HOST PARTIAL ELECTRICAL SITE PLAN E103

SCALE
AS NOTED

PARKS FILE#

ELECTRICAL NOTES:

1. CONNECT NEW EXTERIOR LIGHTS TO EXISTING EXTERIOR LIGHTING CIRCUIT AND CONTROLS.

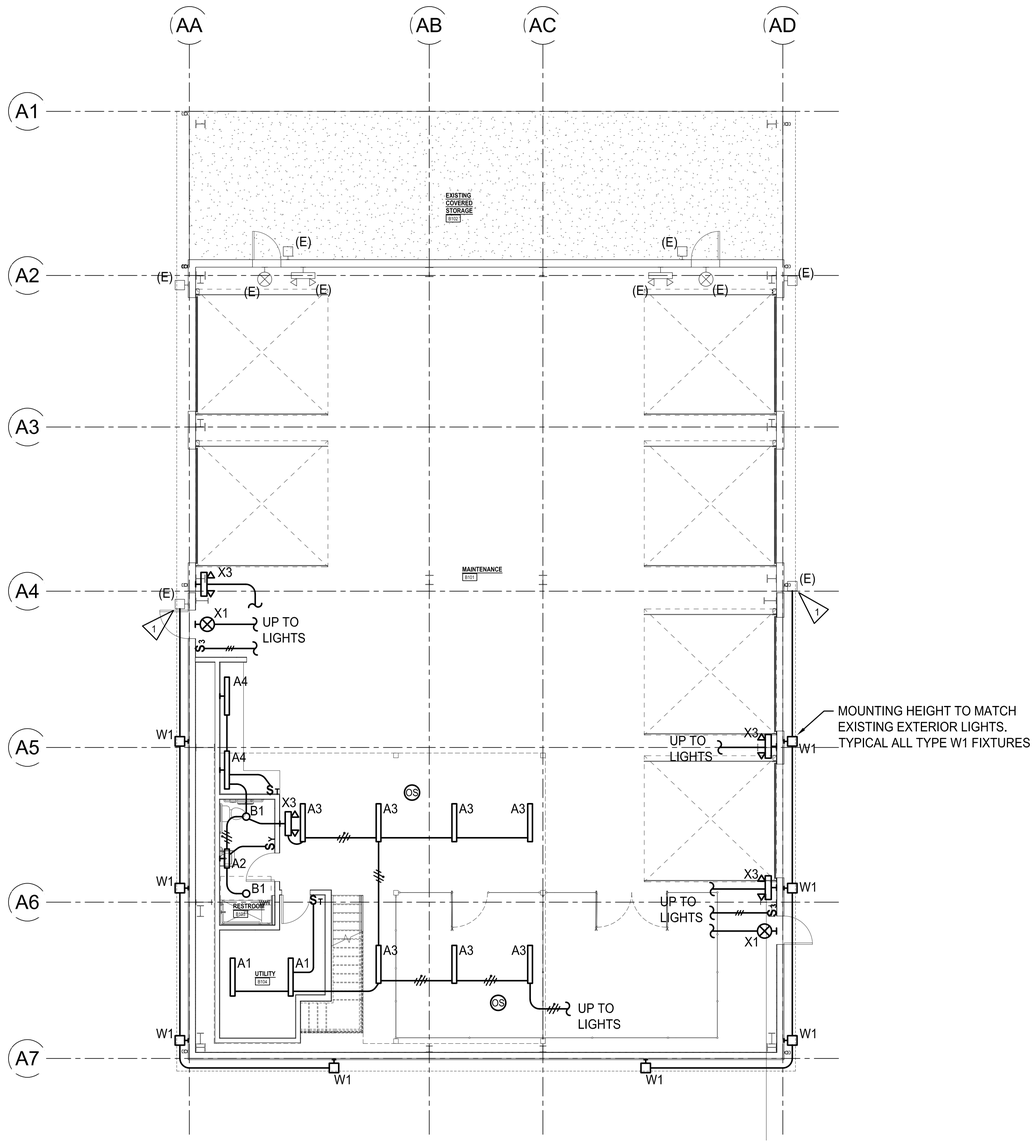

MAINTENANCE BUILDING LIGHTING FLOOR PLAN

SCALE: 1/8"=1'-0"

GRAPHIC SCALE

1/8"=1'-0" 8 0 8 16 scale feet

N

BID SET

N

Call 811 two business days before you dig

CROSS ENGINEERS, INC
923 MLK Jr. Way
Tacoma, WA 98405
info@crossengineers.com
Phone: (253) 759-0118
Job Number: 20-119

SHEET 122 OF 226

CAD NO.

NO.	REVISIONS	INT.	APP.	DATE

ACTION	BY	DATE
DESIGNED	SJK	1/03/25
DRAWN	JAE	1/03/25
CHECKED (FIELD)		
CHECKED (HDQTS.)		

STEVEN L. HUBBS STATE OF WASHINGTON 0029060 REGISTERED PROFESSIONAL ENGINEER

REGISTERED STAMP

WASHINGTON STATE PARKS AND RECREATION COMMISSION

NISQUALLY STATE PARK

PHASE 3A MAINTENANCE BUILDING AND WWTF

MAINTENANCE BUILDING LIGHTING FLOOR PLAN E201

SCALE AS NOTED

PARKS FILE#

ELECTRICAL NOTES:

1. EXISTING PHASE 1 WALL MOUNTED LIGHT FIXTURE MOUNTED ON TEMPORARY PHASE 1 WALL TO BE REMOVED.
2. CONNECT TO SPARE 20A/1-POLE CIRCUIT BREAKER IN (E)PANEL 2M1.

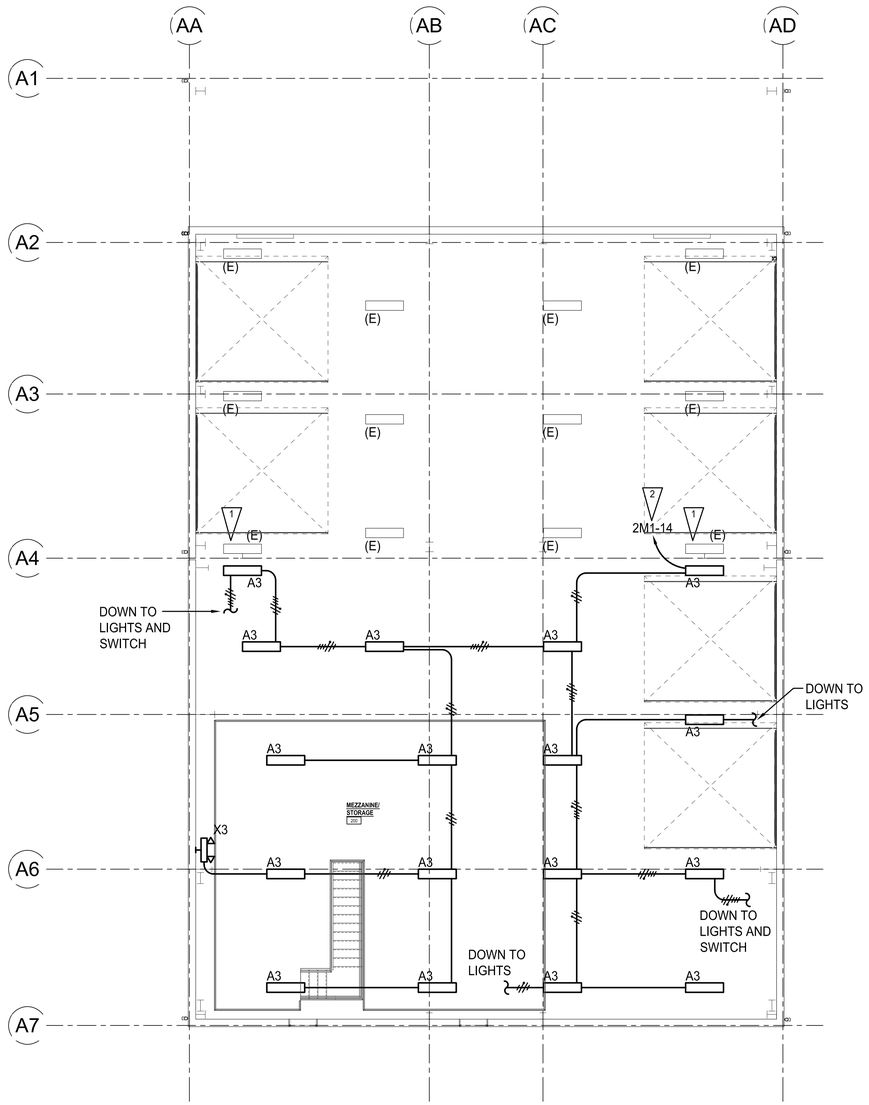

MAINTENANCE BUILDING LIGHTING 2ND FLOOR PLAN

SCALE: 1/8"=1'-0"

GRAPHIC SCALE

1/8"=1'-0" 8 0 8 16 scale feet

N

BID SET

N

Call 811 two business days before you dig

CROSS ENGINEERS, INC
923 MLK Jr. Way
Tacoma, WA 98405
Info@crossengineers.com
Phone: (253) 759-0118
Job Number: 20-119

CAD NO.

NO.	REVISIONS	INT.	APP.	DATE

ACTION	BY	DATE
DESIGNED	SJK	1/03/25
DRAWN	JAE	1/03/25
CHECKED (FIELD)		
CHECKED (HDQTS.)		

STEVEN L. HUBBS STATE OF WASHINGTON 00029060 REGISTERED PROFESSIONAL ENGINEER

REGISTERED STAMP

WASHINGTON STATE PARKS AND RECREATION COMMISSION

NISQUALLY STATE PARK

PHASE 3A MAINTENANCE BUILDING AND WWTF

MAINTENANCE BUILDING LIGHTING 2ND FLOOR PLAN E202

SCALE

AS NOTED

PARKS FILE#

ELECTRICAL NOTES:

1. CONTRACTOR SHALL PROVIDE CONNECTION FOR FUTURE GARAGE DOOR POWER CONNECTION. PROVIDE JUNCTION BOX AT TOP OF GARAGE DOOR WITH 3/4"C.O. (WITH PULLSTRING) BACK TO PANEL 2M2.

2. CONTRACTOR SHALL PROVIDE (2)2'CONDUIT ONLY WITH PULLSTRING FROM FUTURE PHOTOVOLTAIC EQUIPMENT LOCATION TO ROOF FOR ROUTING OF FUTURE SOLAR CABLING. SEE ROOF PLAN, SHEET 302 FOR DESIGNATED FUTURE PHOTOVOLTAIC SYSTEM LOCATION.

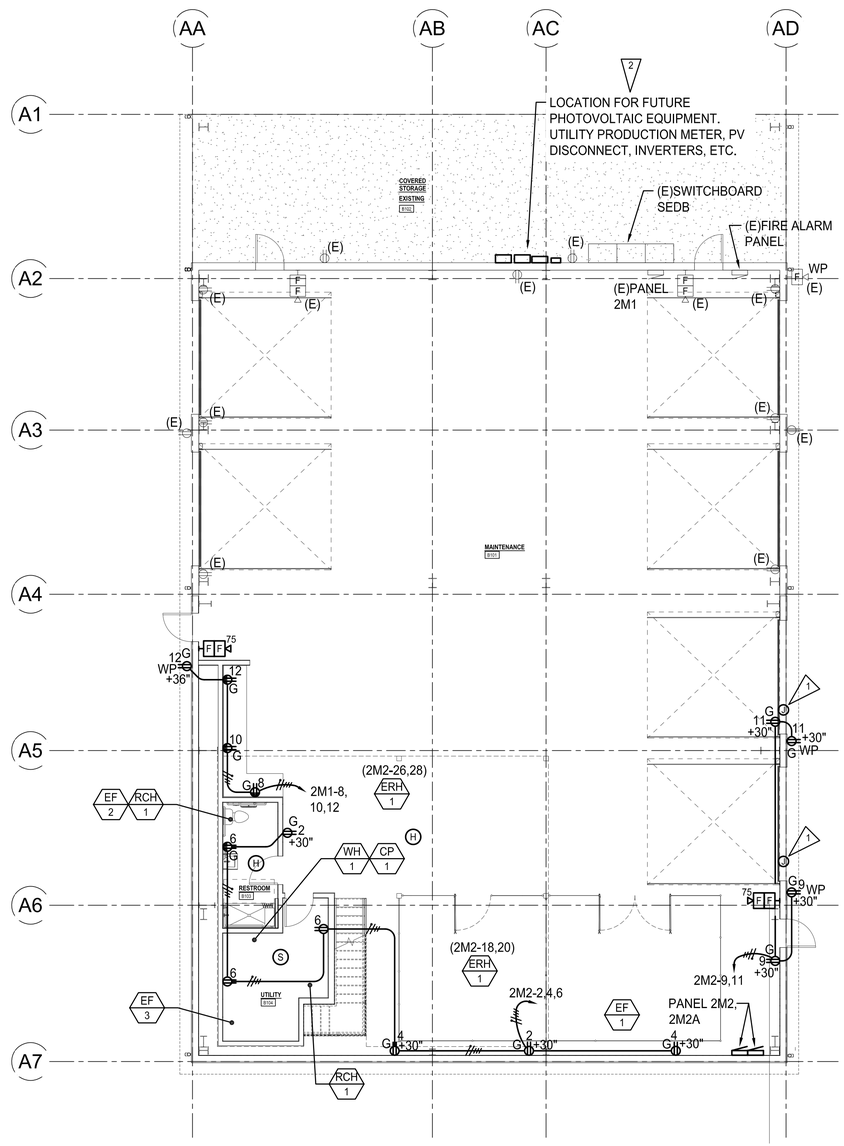

MAINTENANCE BUILDING POWER/SIGNAL FLOOR PLAN

SCALE: 1/8"=1'-0"

GRAPHIC SCALE

1/8"=1'-0" 8 0 8 16 scale feet

N

BID SET

N

Call 811 two business days before you dig

SHEET 124 OF 226

CROSS ENGINEERS, INC
923 MLK Jr. Way
Tacoma, WA 98405
info@crossengineers.com
Phone: (253) 759-0118
Job Number: 20-119

CAD NO.

NO.	REVISIONS	INT.	APP.	DATE

ACTION	BY	DATE
DESIGNED	SJK	1/03/25
DRAWN	JAE	1/03/25
CHECKED (FIELD)		
CHECKED (HDQTS.)		

STEVEN L. HUBBS STATE OF WASHINGTON 00029060 REGISTERED PROFESSIONAL ENGINEER

REGISTERED STAMP

WASHINGTON STATE PARKS AND RECREATION COMMISSION

NISQUALLY STATE PARK

PHASE 3A MAINTENANCE BUILDING AND WWTF

MAINTENANCE BUILDING POWER/SIGNAL FLOOR PLAN E301

SCALE

AS NOTED

PARKS FILE#

ELECTRICAL NOTES:

1. STUBBED AND CAPPED LOCATION FOR (2)2" CONDUITS WITH PULLSTRING FROM FUTURE PHOTOVOLTAIC EQUIPMENT LOCATION. SEE SHEET E301 FOR FUTURE PHOTOVOLTAIC SYSTEM EQUIPMENT LOCATION.

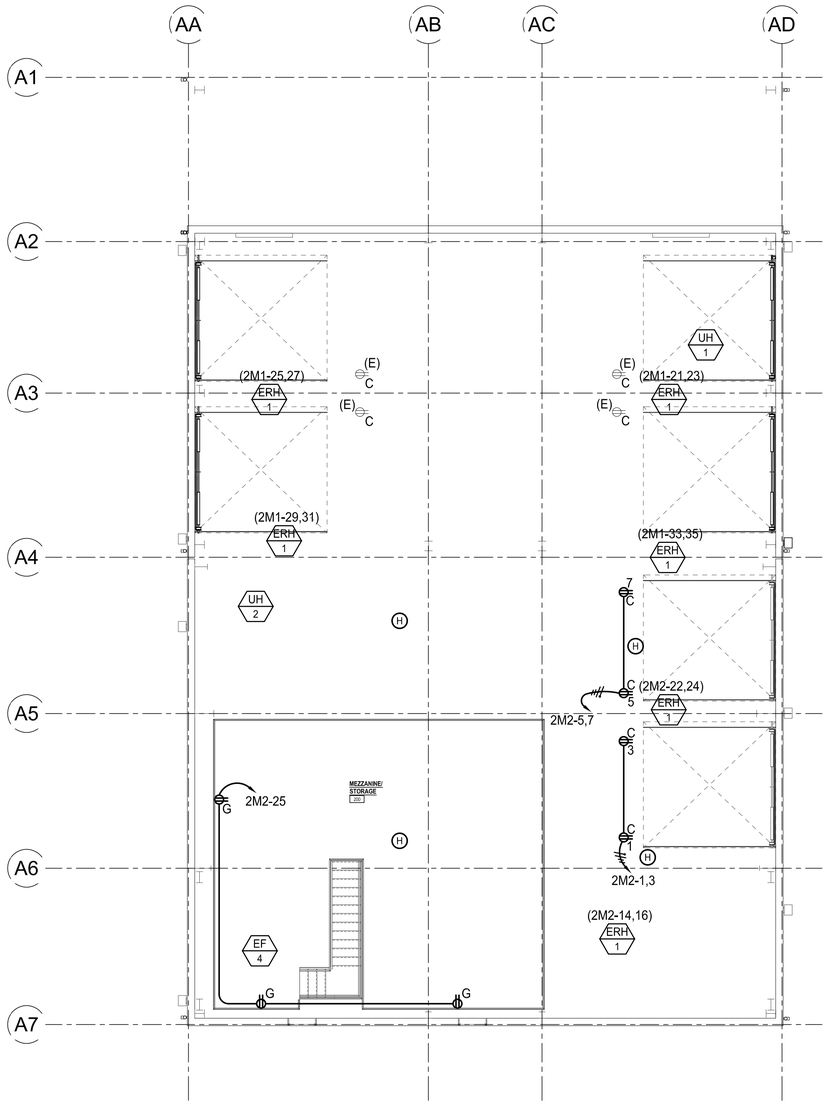

MAINTENANCE BUILDING POWER/SIGNAL 2ND FLOOR PLAN

SCALE: 1/8"=1'-0"

GRAPHIC SCALE

1/8"=1'-0" 8 0 8 16

scale feet

N

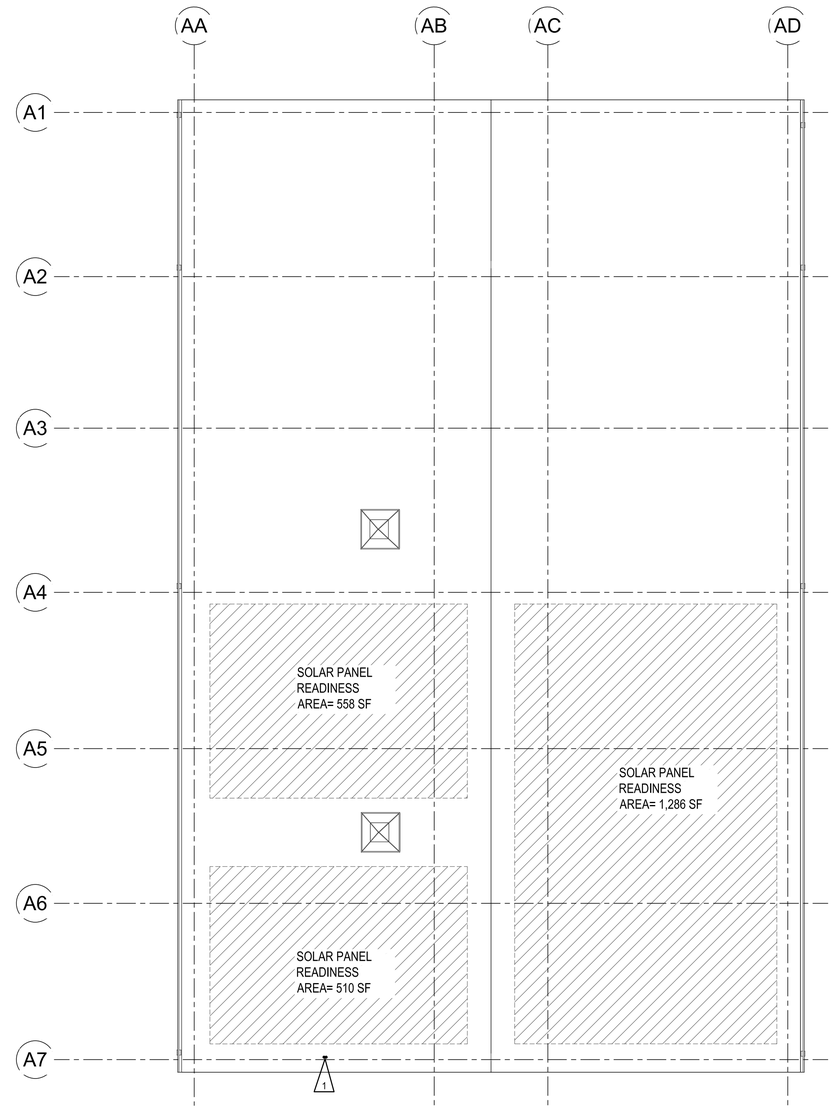

MAINTENANCE BUILDING POWER ROOF PLAN

SCALE: 1/8"=1'-0"

GRAPHIC SCALE

1/8"=1'-0" 8 0 8 16

scale feet

N

BID SET

Call 811 two business days before you dig

CROSS ENGINEERS, INC
923 MLK Jr. Way
Tacoma, WA 98405
info@crossengineers.com
Phone: (253) 759-0118
Job Number: 20-119

CAD NO.

NO.	REVISIONS	INT.	APP.	DATE

ACTION	BY	DATE
DESIGNED	SJK	1/03/25
DRAWN	JAE	1/03/25
CHECKED (FIELD)		
CHECKED (HDQTS.)		

STEVEN L. HUBBS STATE OF WASHINGTON 00229060 REGISTERED PROFESSIONAL ENGINEER

REGISTERED STAMP

WASHINGTON STATE PARKS AND RECREATION COMMISSION

NISQUALLY STATE PARK

PHASE 3A MAINTENANCE BUILDING AND WWTF

MAINTENANCE BUILDING POWER/SIGNAL 2ND FLOOR PLAN

E302

SCALE

AS NOTED

PARKS FILE#

ELECTRICAL NOTES:

1. CONTRACTOR SHALL EXTEND (2)4" CONDUITS STUBBED IN PREVIOUS PHASE TO NEW PANEL 2M2/2M2A.

CONDUIT AND CONDUCTOR SCHEDULE:

1. (E)4"C-WIRE BY OHOP MUTUAL
2. (E)(4)4"C-(4)#500 KCM AL EACH (2)4"C.O.
3. (E)2"C-(4)#3/0 CU & (1)#4 CU GRD
4. (E)(1)4"C - WITH NEW (4)#600 KCM CU & (1)#2 CU GRD (E)(1)4"C-SPARE
5. (E)2"C.O.
6. (E)1-1/4"C.O.
7. (E)(2)4"C.O.
8. (E)(1)4"C-(4)#600 KCM CU & (1)#2 CU GRD (E)(1)4"C-SPARE
9. NEW (1)4"C-(4)#600 KCM CU & (1)#2 CU GRD NEW (1)4"C-SPARE
10. (E)4"C-(4)#4/0 CU & (1)#6 CU GRD
11. NEW 3"C-(4)#4/0 CU & (1)#6 CU GRD
12. NEW 2-1/2"C-(4)#4/0 CU & (1)#6 CU GRD NEW (1)1"C-CONDUCTORS PER GENERATOR MANUFACTURER
13. (E)2"C-WITH NEW (3)#1 CU & (1)#8 CU GRD
14. NEW 2"C-(4)#1 CU & (1)#8 CU GRD

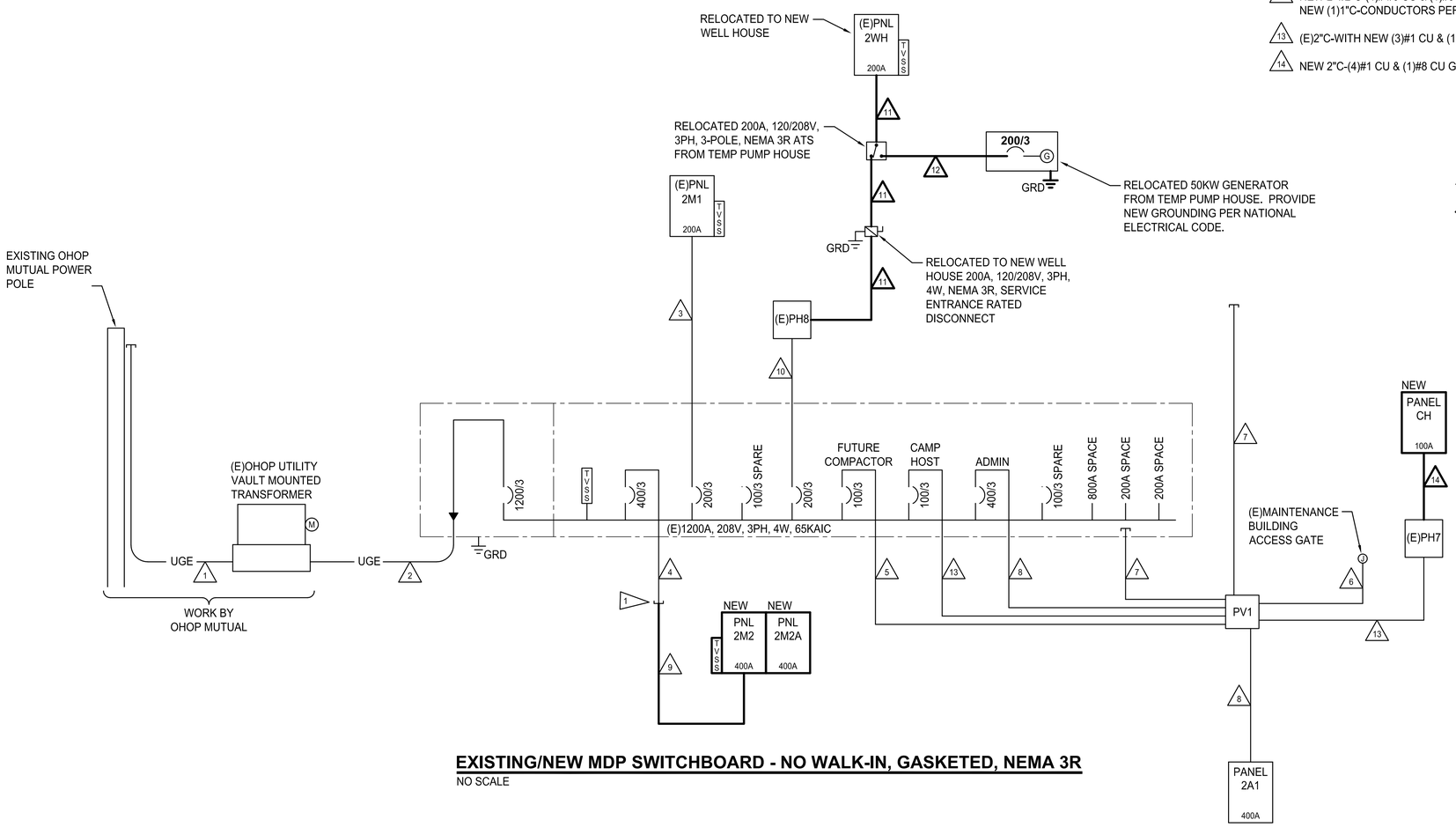

EXISTING/NEW MDP SWITCHBOARD - NO WALK-IN, GASKETED, NEMA 3R

NO SCALE

LEGEND:

- EXISTING
- NEW

N

Call 811 two business days before you dig

CROSS ENGINEERS, INC
923 MLK Jr. Way
Tacoma, WA 98405
info@crossengineers.com
Phone: (253) 759-0118
Job Number: 20-119

BID SET

CAD NO.

NO.	REVISIONS	INT.	APP.	DATE

ACTION	BY	DATE
DESIGNED	SJK	1/03/25
DRAWN	JAE	1/03/25
CHECKED (FIELD)		
CHECKED (HDQTS.)		

STEVEN L. HUBBS, STATE OF WASHINGTON, 00029060, REGISTERED PROFESSIONAL ENGINEER

REGISTERED STAMP

WASHINGTON STATE PARKS AND RECREATION COMMISSION

NISQUALLY STATE PARK

PHASE 3A MAINTENANCE BUILDING AND WWTF

MAINTENANCE BUILDING POWER RISER E401

SCALE AS NOTED

PARKS FILE#

EXISTING

PANEL SCHEDULE

SURFACE MOUNTING
22,000 AIC

NO. **2M1** | LOCATI0N: MAINTENANCE SHOP | SERVING: MAINTENANCE SHOP | 120/208 VOLTS 3PHASE 4WIRE | 200 AMPS WITH 200 MAIN BREAKER

CKT NO.	LOAD DESCRIPTION	KVA	TRIP AMPS		TRIP AMPS	KVA	LOAD DESCRIPTION	CKT NO.	
1	RECEPTS. SHOP CEILING	.18	20		20	.10	TIMECLOCK	2	
3		.18				.17	EXT. POLE LIGHTING 1,2	4	
5		.18				.18	EXT. BUILDING LIGHTING	6	
7		.18				.50	VEHICLE BAY LIGHTING	8	
9	CEILING	.36				.70	EF-1	10	
11		.36				.50	FIRE ALARM PANEL	12	
13		.36				1.17	NEW LIGHTS	14	**
15		.36					SPARE	16	
17	RECEPTS. SHOP	.54	20					18	
19	SPACE							20	
21	ERH-1	6.00	40					22	*
23			2					24	
25	ERH-1	6.00	40					26	*
27			2					28	
29	ERH-1	6.00	40		20		SPARE	30	*
31			2		60	15.00	UH-1	32	*
33	ERH-1	6.00	40					34	*
35			2		3			36	
37	TVSS	-	30		70	20.00	UH-2	38	*
39								40	
41			3		3			42	

REMARKS:

CONNECTED LOAD: 63.4 KVA 176 AMPS
DEMAND LOAD: 63.7 KVA 177 AMPS

* NEW CIRCUIT BREAKER, NEW LOAD.
** EXISTING CIRCUIT BREAKER, NEW LOAD.

PANEL SCHEDULE

SURFACE MOUNTING
22,000 AIC

NO. **2M2** | LOCATI0N: MAINTENANCE SHOP | SERVING: MAINTENANCE SHOP | 120/208 VOLTS 3PHASE 4WIRE | 400 AMPS WITH 400 MAIN BREAKER

CKT NO.	LOAD DESCRIPTION	KVA	TRIP AMPS		TRIP AMPS	KVA	LOAD DESCRIPTION	CKT NO.
1	RECEPTACLES - CEILING	.18	20		20	.36	RECEPTACLES	2
3		.18				.36		4
5		.18				.54		6
7	RECEPTACLES - CEILING	.18				.18		8
9	RECEPTACLES	.36				.18		10
11	RECEPTACLES	.36			20	.36	RECEPTACLES	12
13	EF-1	.70			40	6.00	ERH-1	14
15	EF-2,3,4	.94			2			16
17	CP-1	.19			40	6.00	ERH-1	18
19	RCH-1 (QTY OF 2)	.84	20		2			20
21	WH-1	5.00	30		40	6.00	ERH-1	22
23			2		2			24
25	RECEPTACLES	.54	20		40	6.00	ERH-1	26
27	SPARE				2			28
29							SPACE	30
31								32
33								34
35	SPARE		20					36
37	TVSS	-	30					38
39								40
41			3				SPACE	42

REMARKS: PROVIDE FEED THRU LUGS TO PANEL 2M2A

CONNECTED LOAD: 74.7 KVA 208 AMPS
DEMAND LOAD: 84.3 KVA 234 AMPS

PANEL SCHEDULE

SURFACE MOUNTING
22,000 AIC

NO. **2M2A** | LOCATI0N: MAINTENANCE SHOP | SERVING: MAINTENANCE SHOP | 120/208 VOLTS 3PHASE 4WIRE | 400 AMPS WITH MAIN LUGS

CKT NO.	LOAD DESCRIPTION	KVA	TRIP AMPS		TRIP AMPS	KVA	LOAD DESCRIPTION	CKT NO.
1	EV CHARGER	6.24	40		40	6.24	EV CHARGER	2
3			2		2			4
5	EV CHARGER	6.24	40		40	6.24	EV CHARGER	6
7			2		2			8
9	EV CHARGER	6.24	40		40		SPARE	10
11			2		2			12
13	EV CHARGER	6.24	40		40		SPARE	14
15			2		2			16
17	SPARE		20				SPACE	18
19	SPARE		20					20
21	SPARE		20					22
23	SPACE							24
25								26
27								28
29								30
31								32
33								34
35								36
37								38
39								40
41	SPACE						SPACE	42

REMARKS: .

CONNECTED LOAD: 37.4 KVA 104 AMPS
DEMAND LOAD: 46.8 KVA 130 AMPS

MECHANICAL EQUIPMENT ELECTRICAL CONNECTION SCHEDULE- MAINTENANCE BUILDING

ITEM	DESCRIPTION	LOCATION	VOLTS	PHASE	HP / KW	MIN. CIRCUIT AMPS	DISC. SWITCH	FUSES	MAGNETIC STARTER	FEEDER	CIRCUIT NUMBER	NOTES
CP 1	CIRCULATION PUMP	UTILITY B104	120	1	1/10 / -	1.6	1	-	-	3/4"C-2#12 CU & 1#12 CU GRD	2M2-17	
EF 1	EXHAUST FAN	MAINTENANCE B101	120	1	1/4 / -	5.8	1	-	-	3/4"C-2#12 CU & 1#12 CU GRD	2M2-13	
EF 2	EXHAUST FAN	RESTROOM B103	120	1	- / -	1	1	-	-	3/4"C-2#12 CU & 1#12 CU GRD	2M2-15	
EF 3	EXHAUST FAN	UTILITY B104	120	1	- / -	1	1	-	-	3/4"C-2#12 CU & 1#12 CU GRD	2M2-15	
EF 4	EXHAUST FAN	MEZZANINE	120	1	1/4 / -	5.8	1	-	-	3/4"C-2#12 CU & 1#12 CU GRD	2M2-15	
ERH 1	RADIANT HEATER	MAINTENANCE B101	208	1	- / 6.00	28.8	2P60	40	-	1"C-2#8 CU & 1#10 CU GRD	SEE FLR. PLANS	2
RCH 1	RADIANT COVE HEATER	SEE FLOOR PLANS	120	1	- / .42	3.5	1	-	-	3/4"C-2#12 CU & 1#12 CU GRD	2M2-19	3
UH 1	UNIT HEATER	MAINTENANCE B101	208	3	- / 15.00	41.7	3P60	60	-	1"C-3#6 CU & 1#10 CU GRD	2M1-32, 34,36	
UH 2	UNIT HEATER	MAINTENANCE B101	208	3	- / 20.00	55.6	3P100	70	-	1-1/4"C-3#4 CU & 1#8 CU GRD	2M1-38, 40,42	
WH 1	WATER HEATER	UTILITY B104	208	1	- / 5.00	24	2P30	30	-	3/4"C-2#10 CU & 1#10 CU GRD	2M2-21,23	

MECHANICAL EQUIPMENT CONNECTION SCHEDULES NOTES:

1. PROVIDE 20A MOTOR RATED TOGGLE SWITCH
2. QUANTITY OF EIGHT (8).
3. QUANTITY OF TWO (2).

BID SET

Call 811 two business days before you dig

CROSS ENGINEERS, INC
923 MLK Jr. Way
Tacoma, WA 98405
Info@crossengineers.com
Phone: (253) 759-0118
Job Number: 20-119

CAD NO.

NO.	REVISIONS	INT.	APP.	DATE

ACTION	BY	DATE
DESIGNED	SJK	1/03/25
DRAWN	JAE	1/03/25
CHECKED (FIELD)		
CHECKED (HDQTS.)		

STEVEN L. HUBBS, STATE OF WASHINGTON, 00029060, REGISTERED PROFESSIONAL ENGINEER

REGISTERED STAMP

WASHINGTON STATE PARKS AND RECREATION COMMISSION

NISQUALLY STATE PARK

PHASE 3A MAINTENANCE BUILDING AND WWTF

MAINTENANCE BUILDING ELECTRICAL SCHEDULES E402

SCALE
AS NOTED

PARKS FILE#

CONDUIT AND CONDUCTOR SCHEDULE - EXISTING PHASE 1 WORK COMPLETED

CIRCUIT ID	CONDUIT			CONDUCTORS PER CONDUIT			FROM	TO	REMARKS
	NO.	SIZE	TYPE	NO.	SIZE	TYPE			
(E)WC7	1	2"	PVC	-	-	-	(E)CH9	(E)CH10	
WC15	1	2"	PVC	-	-	-	(E)CH11	NEW CH11A	2
WC16	1	2"	PVC/GRS	-	-	-	NEW CH11A	COMMUNICATION BOX AT WELL HOUSE	2
WC17	1	2"	PVC/GRS	-	-	-	(E)STUB LOCATION - SHEET E103	COMMUNICATION BOX AT HOST CAMPSITE	2
(E)WCS4	4	2"	PVC	-	-	-	(E)CV1	(E)CH3	
(E)WCS6	4	2"	PVC	-	-	-	(E)CH3	(E)CH2	
(E)WCS7	1	2"	PVC	-	-	-	(E)CH2	(E)CH9	
(E)WCS14	1	2"	PVC	-	-	-	(E)CH10	(E)STUB LOCATION - SHEET E103	
(E)WPS4	1	2"	PVC	4/1	1/8	CU	(E)MDP	(E)PV1	3
(E)WPS7	2	2"	PVC	4/1	1/8	CU	(E)PV1	(E)PH1	3 4
(E)WPS8	1	2"	PVC	4/1	1/8	CU	(E)PH1	(E)PH6	3
(E)WPS12	1	4"	PVC	4/1	0000/6	CU	(E)MDP	(E)PH8	1
(E)WPS14	1	2"	PVC	4/1	1/8	CU	(E)PH6	(E)PH7	3
(E)WPS15	1	2"	PVC	4/1	1/8	CU	(E)PH7	(E)STUB LOCATION - SHEET E103	3
WP20	1	4"	PVC	4/1	0000/6	CU	(E)PH8	NEW PH8A	
WP21	1	4"	PVC/GRS	3/1	4/8	CU	NEW PH8A	RELOCATED (E)PANEL 2WH AT WELL HOUSE	
WP22	1	2"	PVC/GRS	3/1	1/8	CU	(E)STUB LOCATION - SHEET E103	NEW PANEL CH	

SCHEDULE ABBREVIATION LEGEND:

WC = WASHINGTON STATE PARKS COMMUNICATIONS CONDUIT

WP = WASHINGTON STATE PARKS POWER CONDUIT

WPS = WASHINGTON STATE PARKS SPARE POWER CONDUIT

PVC = SCHEDULE 40 PVC CONDUIT

GRS = GALVANIZED RIGID STEEL CONDUIT

CH = COMMUNICATIONS HANDHOLE

PH = POWER HANDHOLE

SCHEDULE NOTES:

1. EXISTING CONDUIT/CONDUCTORS INSTALLED IN PHASE 2 FOR TEMP WELL HOUSE.
2. PROVIDE (1) 3-CELL, EDGE DETECTABLE INNERDUCT IN (1)2" CONDUIT. MAXCELL #MXED52223 OR EQUAL.
3. EXISTING CONDUIT, NEW CONDUCTORS.
4. NEW CONDUCTORS INSTALLED IN ONLY ONE (1) OF THE EXISTING (2)2" CONDUITS.

BID SET

Call 811 two business days before you dig

CROSS ENGINEERS, INC
923 MLK Jr. Way
Tacoma, WA 98405
info@crossengineers.com
Phone: (253) 759-0118
Job Number: 20-119

CAD NO.

NO.	REVISIONS	INT.	APP.	DATE

ACTION	BY	DATE
DESIGNED	SJK	1/03/25
DRAWN	JAE	1/03/25
CHECKED (FIELD)		
CHECKED (HDQTS.)		

STEVEN L. HUBBS STATE OF WASHINGTON 00029060 REGISTERED PROFESSIONAL ENGINEER

REGISTERED STAMP

WASHINGTON STATE PARKS AND RECREATION COMMISSION

NISQUALLY STATE PARK

PHASE 3A MAINTENANCE BUILDING AND WWTF

SITE CONDUIT/ CONDUCTOR SCHEDULE E403

SCALE
AS NOTED

PARKS FILE#

VAULT AND HANDHOLE SCHEDULE			
ID	DESCRIPTION	LOADING	NOTES
PH8A	CUSTOM POWER HANDHOLE, SEE DETAIL B, THIS SHEET	MINIMUM H25	1 2 3 4 5 6
CH11A	CUSTOM COMMUNICATIONS HANDHOLE, SEE DETAIL B, THIS SHEET	MINIMUM H25	1 2 3 4 5 6

VAULT SCHEDULE NOTES:

1. ALL CONDUITS ENTERING OR LEAVING VAULTS SHALL USE BLOCK-OUTS WITH BELL ENDS AND GROUTED. PROVIDE REMOVABLE FOAM FILL IN ALL EMPTY CONDUIT OPENINGS. PROVIDE PULL STRINGS IN ALL EMPTY CONDUITS. PROVIDE CONDUIT LABELS FOR ALL CONDUITS ENTERING AND LEAVING VAULTS/HANDHOLES. PROVIDE PHENOLIC LABEL ATTACHED TO VAULT/HANDHOLE WALL WITH TWO (2) PLASTIC INSERTS AND STAINLESS STEEL SCREWS ADJACENT TO EACH CONDUIT. PHENOLIC LABEL SHALL HAVE CONDUIT ID ENGRAVED AS INDICATED ON CONDUIT AND WIRE SCHEDULE DRAWINGS.
2. POWER AND COMMUNICATIONS VAULT/HANDHOLE BEDDING. CONTRACTOR SHALL COMPACT SUBGRADE TO 95% OF MAXIMUM DENSITY, THEN INSTALL 4" OF CLASS A BACKFILL COMPACTED TO 95% OF MAXIMUM DENSITY AND THEN 2" OF .625 MINUS CRUSHED ROCK COMPACTED TO 100% MAXIMUM DENSITY FOR BEDDING. SEE CIVIL AND SLOPE ALL GRADES AWAY FROM LIDS TO PREVENT SURFACE WATER FROM ENTERING VAULT.
3. ALL WIRE (POWER AND COMMUNICATIONS) SHALL COMPLETELY LOOP AROUND VAULT/HANDHOLE WALLS PRIOR TO EXITING VAULT.
4. CONTRACTOR SHALL PROVIDE WELDED BEAD LABEL ON LID TO READ "ELECTRIC" OR "COMMUNICATIONS". METAL STAMP LID AND FRAME OF EACH VAULT/HANDHOLE TO MATCH DRAWING LABELS.
5. PROVIDE BOLTED GROUND LUG(S) ON LID AND FRAME. PROVIDE #2 BARE CU GROUND IN EACH VAULT TO TWO (2) 3/4" X 10'-0" GROUND RODS EXTERIOR TO VAULT OR HANDHOLE.
6. PROVIDE STENCIL PAINTED, VAULT/HANDHOLE LOAD RATING ON INSIDE OF VAULT DIRECTLY BELOW LID. MINIMUM 4" HIGH LETTERS.

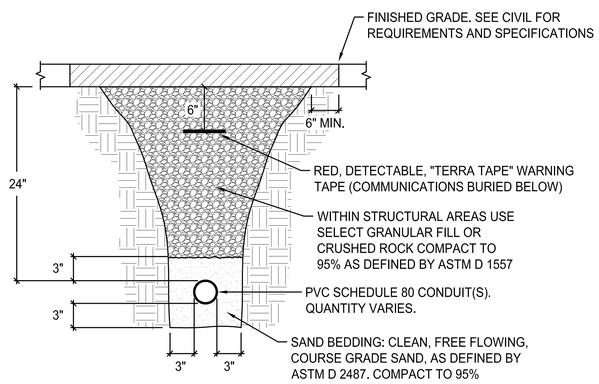

A E501 **TYPICAL CONDUIT TRENCHING DETAIL**
NOT TO SCALE

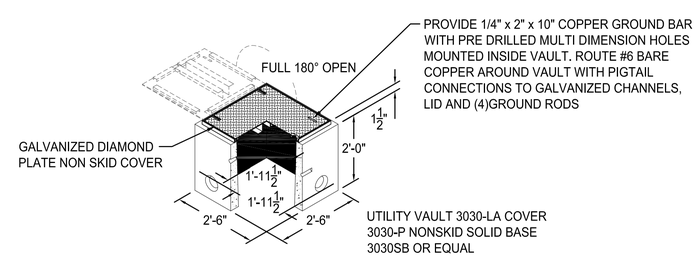

B E501 **POWER/COMMUNICATIONS HANDHOLE**
NOT TO SCALE

CROSS ENGINEERS, INC
923 MLK Jr. Way
Tacoma, WA 98405
info@crossengineers.com
Phone: (253) 759-0118
Job Number: 20-119

Call 811 two business days before you dig

BID SET

CAD NO.

NO.	REVISIONS	INT.	APP.	DATE

ACTION	BY	DATE
DESIGNED	SJK	1/03/25
DRAWN	JAE	1/03/25
CHECKED (FIELD)		
CHECKED (HDQTS.)		

STEVEN L. HUBBS STATE OF WASHINGTON 00029060 REGISTERED PROFESSIONAL ENGINEER

REGISTERED STAMP

WASHINGTON STATE PARKS AND RECREATION COMMISSION

NISQUALLY STATE PARK

PHASE 3A MAINTENANCE BUILDING AND WWTF

ELECTRICAL DETAILS E501

SCALE
AS NOTED

PARKS FILE#

PRIVATE IMPROVEMENTS

1001191
PERMIT #

01-05-2023
DATE

DEVELOPMENT ENGINEER

PIERCE COUNTY ORDINANCE NUMBER 2021-45

1. CONTACT Dennis Peterson THE AREA INSPECTOR, AT 253-798- 2539 TO COORDINATE THE PRE-CONSTRUCTION MEETING AND COUNTY INSPECTIONS. PRE-CONSTRUCTION MEETING SHALL BE REQUESTED AT LEAST 48-HOURS IN ADVANCE OF THE START OF CONSTRUCTION.
2. APPOINT A CERTIFIED EROSION AND SEDIMENT CONTROL LEAD WHO SHALL BE PROVIDED A COPY OF THE SWPPP, EROSION CONTROL PLAN & INSPECTION SCHEDULE.
3. FAILURE TO OBTAIN REQUIRED INSPECTIONS MAY ENDANGER OR DELAY PROJECT APPROVAL.
4. ALL WORK IN THE PUBLIC RIGHT-OF-WAY REQUIRES A GENERAL RIGHT-OF-WAY PERMIT FROM PIERCE COUNTY PLANNING AND PUBLIC WORKS.

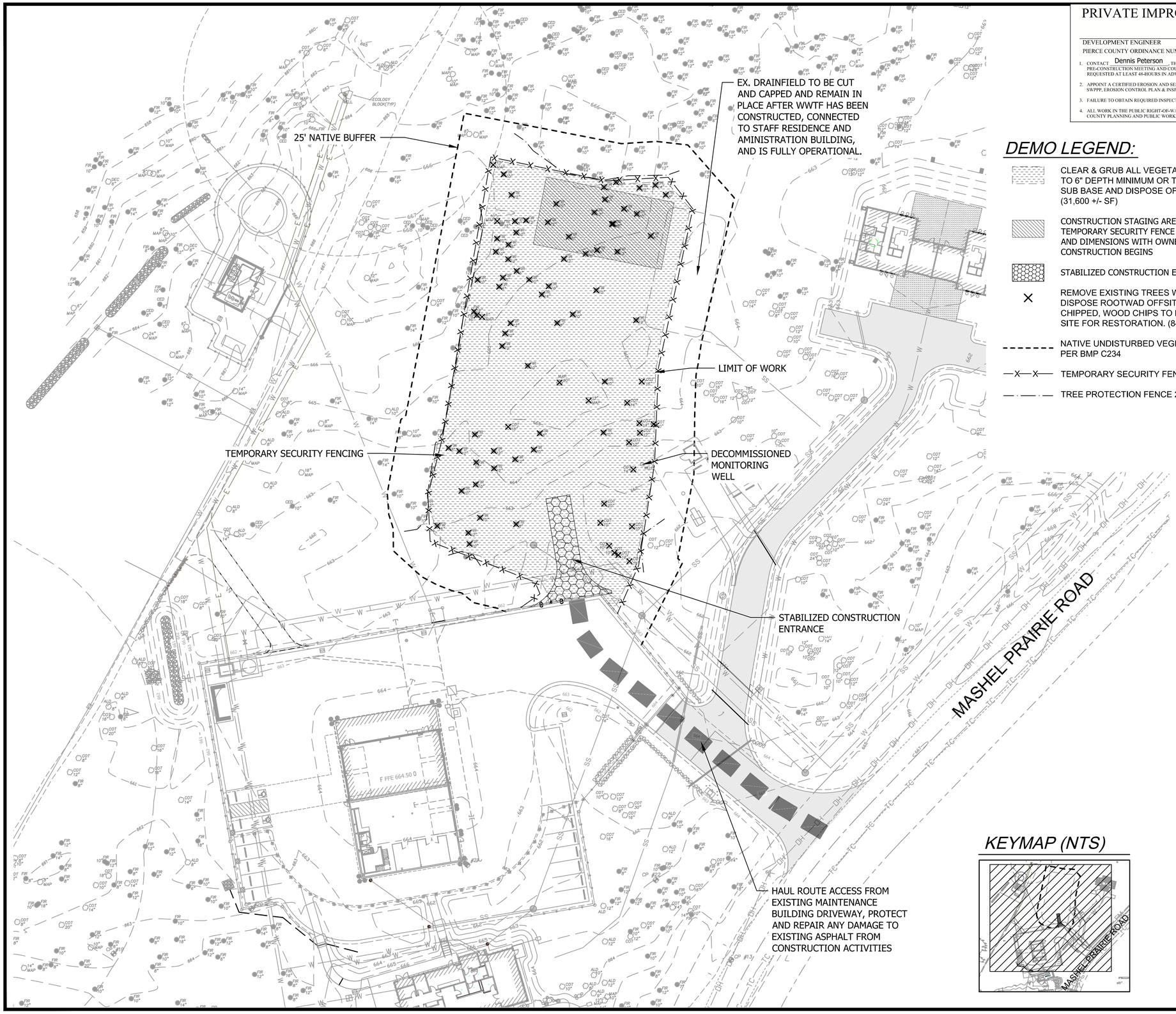

DEMO LEGEND:

- CLEAR & GRUB ALL VEGETATION FROM AREA TO 6" DEPTH MINIMUM OR TO MINERAL SOIL SUB BASE AND DISPOSE OF OFF SITE LEGALLY (31,600 +/- SF)
- CONSTRUCTION STAGING AREA ENCLOSED WITH TEMPORARY SECURITY FENCE CONFIRM LOCATION AND DIMENSIONS WITH OWNER BEFORE CONSTRUCTION BEGINS
- STABILIZED CONSTRUCTION ENTRANCE 1/D2.1
- REMOVE EXISTING TREES WITH ROOTWAD. DISPOSE ROOTWAD OFFSITE, TREES TO BE CHIPPED, WOOD CHIPS TO BE STOCKPILED ON SITE FOR RESTORATION. (84 +/- TREES)
- NATIVE UNDISTURBED VEGETATION BUFFER, PER BMP C234
- TEMPORARY SECURITY FENCING 1/D3.0
- TREE PROTECTION FENCE 2/D3.0

KEYMAP (NTS)

Call 811 two business days before you dig

SHEET 130 OF 226

BID SET

CAD NO.

NO.	REVISIONS	INT.	APP.	DATE

ACTION	BY	DATE
DESIGNED		
DRAWN		
CHECKED (FIELD)		
CHECKED (HDQTS.)		

STATE OF WASHINGTON
JONAH HAYES
No. 24012382 EXP. 05/16/2026
LICENSED LANDSCAPE ARCHITECT

REGISTERED STAMP

WASHINGTON STATE PARKS AND RECREATION COMMISSION

NISQUALLY STATE PARK

PHASE 3A MAINTENANCE BUILDING AND WWTF

WWTF DEMO AND TESC PLAN

B-D1.0

SCALE 30' 0 60'

PARKS FILE#

G:\2018\180620 New Full Service Park Design Services\Drawings\Sheets\Phase 3\Bid Set 1 Maint, Pump, WWTF, Utility\Schedule B\B-D1.0-1.1 Demo TESC Plan.dwg
Apr-09-25 9:29am

PRIVATE IMPROVEMENTS

1001191
PERMIT #

01-05-2023
DATE

DEVELOPMENT ENGINEER

PIERCE COUNTY ORDINANCE NUMBER 2021-45

1. CONTACT Dennis Peterson THE AREA INSPECTOR, AT 253-798- 2539 TO COORDINATE THE PRE-CONSTRUCTION MEETING AND COUNTY INSPECTIONS. PRE-CONSTRUCTION MEETING SHALL BE REQUESTED AT LEAST 48-HOURS IN ADVANCE OF THE START OF CONSTRUCTION.
2. APPOINT A CERTIFIED EROSION AND SEDIMENT CONTROL LEAD WHO SHALL BE PROVIDED A COPY OF THE SWPPP, EROSION CONTROL PLAN & INSPECTION SCHEDULE.
3. FAILURE TO OBTAIN REQUIRED INSPECTIONS MAY ENDANGER OR DELAY PROJECT APPROVAL.
4. ALL WORK IN THE PUBLIC RIGHT-OF-WAY REQUIRES A GENERAL RIGHT-OF-WAY PERMIT FROM PIERCE COUNTY PLANNING AND PUBLIC WORKS.

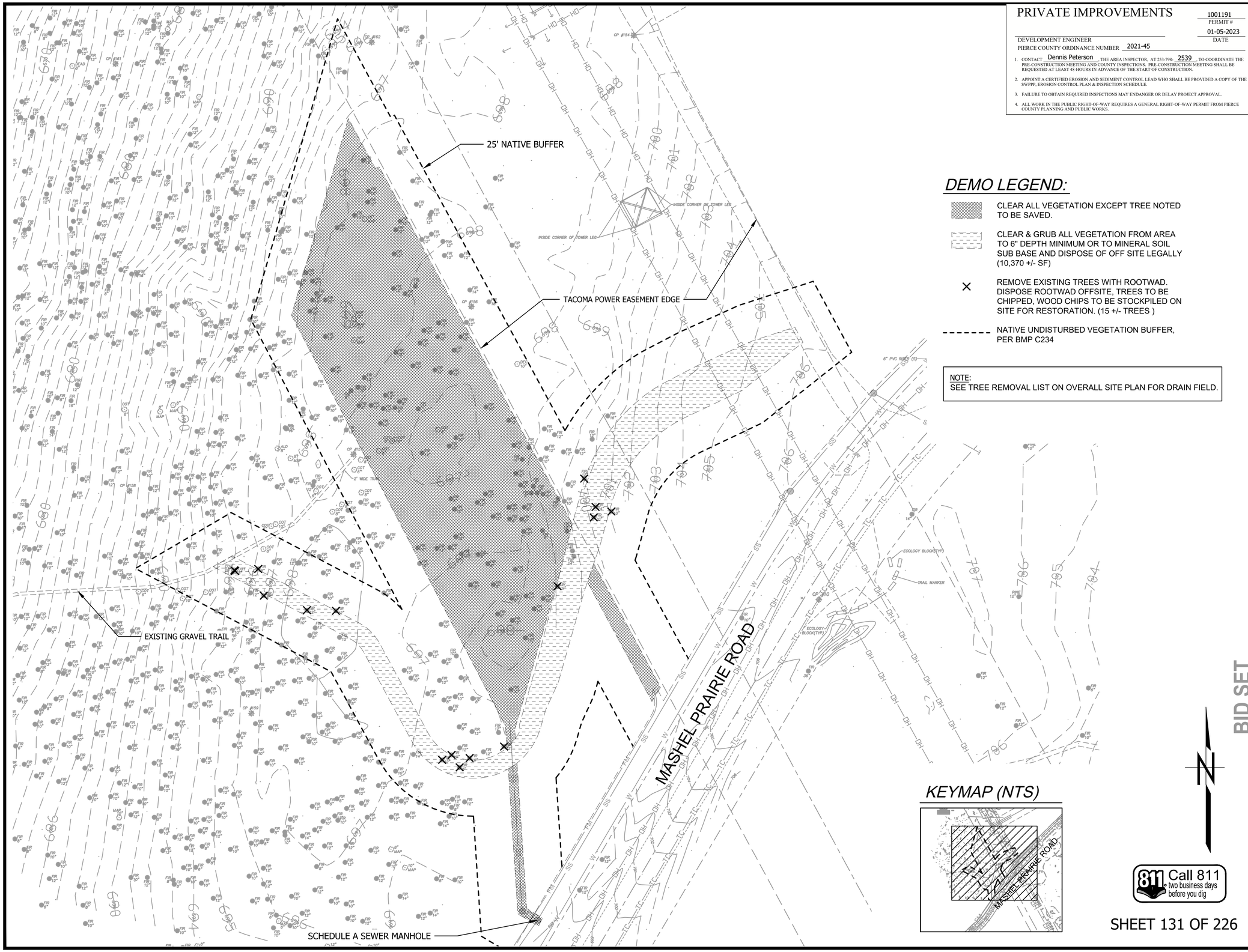

DEMO LEGEND:

- CLEAR ALL VEGETATION EXCEPT TREE NOTED TO BE SAVED.
- CLEAR & GRUB ALL VEGETATION FROM AREA TO 6" DEPTH MINIMUM OR TO MINERAL SOIL SUB BASE AND DISPOSE OF OFF SITE LEGALLY (10,370 +/- SF)
- × REMOVE EXISTING TREES WITH ROOTWAD. DISPOSE ROOTWAD OFFSITE, TREES TO BE CHIPPED, WOOD CHIPS TO BE STOCKPILED ON SITE FOR RESTORATION. (15 +/- TREES)
- NATIVE UNDISTURBED VEGETATION BUFFER, PER BMP C234

NOTE:
SEE TREE REMOVAL LIST ON OVERALL SITE PLAN FOR DRAIN FIELD.

KEYMAP (NTS)

Call 811 two business days before you dig

SHEET 131 OF 226

BID SET

CAD NO.

NO.	REVISIONS	INT.	APP.	DATE

ACTION	BY	DATE
DESIGNED		
DRAWN		
CHECKED (FIELD)		
CHECKED (HDQTS.)		

STATE OF WASHINGTON
JONAH HAYES
No. 24012362 EXP. 05/16/2026
LICENSED LANDSCAPE ARCHITECT

REGISTERED STAMP

WASHINGTON STATE PARKS AND RECREATION COMMISSION

NISQUALLY STATE PARK

PHASE 3A MAINTENANCE BUILDING AND WWTF

DRAIN FIELD DEMO AND TESC PLAN

B-D1.1

SCALE 0 30' 60'

PARKS FILE#

O:\2018\18062A New Full Service Park Design Services\Drawings\Sheets\Phase 3\Bid Set 1 Maint, Pump, WWTF, Utility\Schedule B\B-D1.0-1.1 Demo TESC Plan.dwg
Jan-10-25 11:36am

PRIVATE IMPROVEMENTS

1001191
PERMIT #

01-05-2023
DATE

DEVELOPMENT ENGINEER

PIERCE COUNTY ORDINANCE NUMBER 2021-45

1. CONTACT Dennis Peterson THE AREA INSPECTOR, AT 253-798- 2539 TO COORDINATE THE PRE-CONSTRUCTION MEETING AND COUNTY INSPECTIONS. PRE-CONSTRUCTION MEETING SHALL BE REQUESTED AT LEAST 48-HOURS IN ADVANCE OF THE START OF CONSTRUCTION.
2. APPOINT A CERTIFIED EROSION AND SEDIMENT CONTROL LEAD WHO SHALL BE PROVIDED A COPY OF THE SWPPP, EROSION CONTROL PLAN & INSPECTION SCHEDULE.
3. FAILURE TO OBTAIN REQUIRED INSPECTIONS MAY ENDANGER OR DELAY PROJECT APPROVAL.
4. ALL WORK IN THE PUBLIC RIGHT-OF-WAY REQUIRES A GENERAL RIGHT-OF-WAY PERMIT FROM PIERCE COUNTY PLANNING AND PUBLIC WORKS.

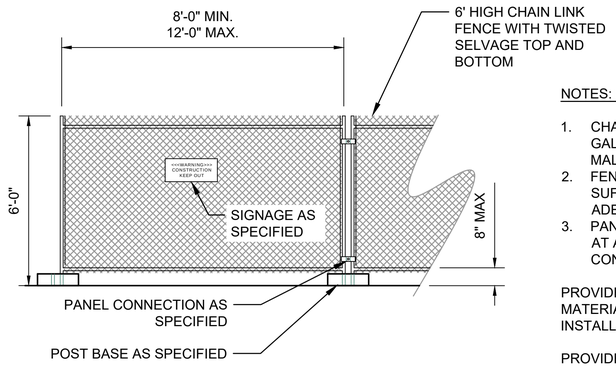

NOTES: INSTALLATION - NON-SLOPED AREAS:

1. CHAIN LINK FABRIC TO BE MIN. 11 GAUGE, GALVANIZED. NO RUSTED OR EXCESSIVELY MALFORMED FABRIC.
2. FENCE BASES SHALL BE CONCRETE AND OF SUFFICIENT WEIGHT AND/OR SPREAD TO ADEQUATELY SUPPORT EACH PANEL.
3. PANEL-TO-PANEL CONNECTIONS SHALL BE MADE AT A MINIMUM OF TWO LOCATIONS PER CONNECTION UNLESS OTHERWISE APPROVED.

PROVIDE OWNER WITH SHOP DRAWINGS DESCRIBING MATERIALS & METHODS FOR SECURE, PLUMB INSTALLATIONS ON SLOPED AREAS.

PROVIDE OWNER WITH SHOP DRAWINGS DESCRIBING MATERIALS & METHODS FOR GATES/ACCESS POINTS INSTALLATIONS.

1 D3.0 TEMPORARY SECURITY FENCING

SCALE: NTS

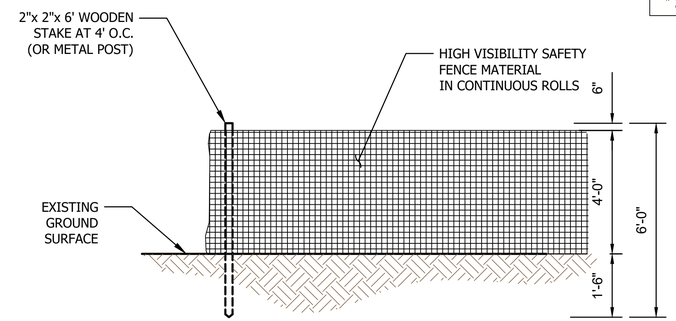

TREE PROTECTION ZONE (TPZ):

1. EXTEND FROM TREE TRUNK TO 1 FOOT FOR EVERY INCH OF TRUNK DIAMETER MEASURED AT 4.5 FEET ABOVE GRADE OR 6' WHICHEVER IS GREATER.
2. PROTECTIVE FENCING TO REMAIN INSTALLED AT ALL TIMES.
3. NO STORAGE OF EQUIPMENT OR MATERIALS WITHIN TPZ, OR WASHING OF EQUIPMENT IN OR WITHIN 10' OF TPZ.

DRIPLINE

1. EXTENDS FROM TRUNK TO OUTER CANOPY EDGE - DRIP LINE.
2. ABSOLUTELY NO STORAGE OF EQUIPMENT OR MATERIALS WITHIN DRIPLINE

2 D3.0 TREE PROTECTION FENCE

SCALE: NOT TO SCALE

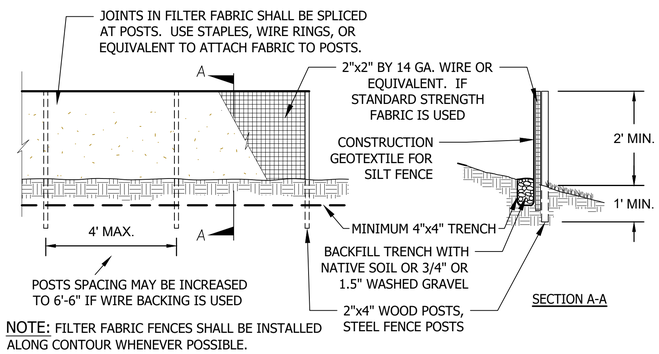

NOTE: FILTER FABRIC FENCES SHALL BE INSTALLED ALONG CONTOUR WHENEVER POSSIBLE.

3 D3.0 SILT FENCE

SCALE: NOT TO SCALE

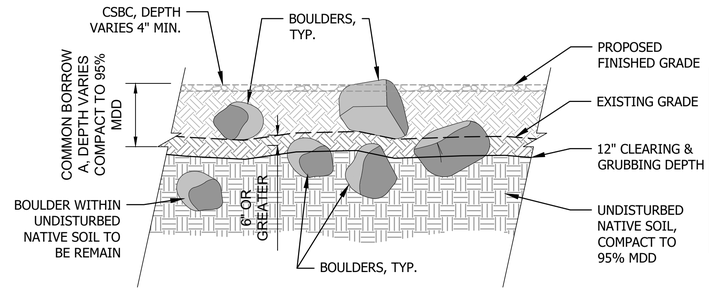

NOTE: BOULDERS DISCOVERED DURING GRUBBING AND EXCAVATION THAT ARE LARGER THAN 1' DIA ARE TO BE SALVAGED AND STOCKPILED ON SITE FOR LATER USE AS DIRECTED BY PROJECT LANDSCAPE ARCHITECT. SMALLER BOULDERS ARE TO BE DISPOSED OF OFF SITE LEGALLY.

4 D3.0 BOULDER IDENTIFICATION

SCALE: NOT TO SCALE

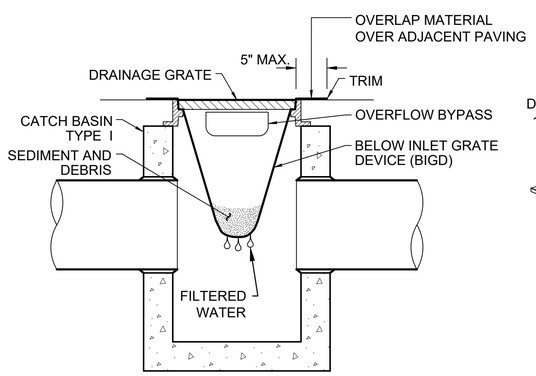

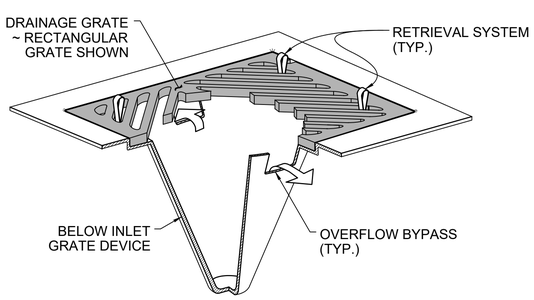

INLET PROTECTION NOTE:

CONTRACTOR SHALL CLEAN-OUT ALL SEDIMENT AND DEBRIS UPON FINAL COMPLETION AND LEAVE THE INLET PROTECTION DEVICE IN PLACE.

INSTALLATION NOTES:

1. SIZE THE BELOW INLET GRATE DEVICE (BIGD) FOR THE STORM WATER STRUCTURE IT WILL SERVICE.
2. THE BIGD SHALL HAVE A BUILT-IN HIGH-FLOW RELIEF SYSTEM (OVERFLOW BYPASS).
3. THE RETRIEVAL SYSTEM MUST ALLOW REMOVAL OF THE BIGD WITHOUT SPILLING THE COLLECTED MATERIAL.
4. PERFORM MAINTENANCE IN ACCORDANCE WITH WSDOT STANDARD SPECIFICATION 8-01.3(15).

5 D3.0 INLET PROTECTION

SCALE: NTS

BID SET

CAD NO.

NO.	REVISIONS	INT.	APP.	DATE

ACTION	BY	DATE
DESIGNED		
DRAWN		
CHECKED (FIELD)		
CHECKED (HDQTS.)		

STATE OF WASHINGTON · JONAH HAYES · No. 24012962 Exp. 06/16/2026 · LICENSED LANDSCAPE ARCHITECT

REGISTERED STAMP

WASHINGTON STATE PARKS AND RECREATION COMMISSION

NISQUALLY STATE PARK

PHASE 3A MAINTENANCE BUILDING AND WWTF

DEMO AND TESC DETAILS

B-D2.0

SCALE

AS SHOWN

PARKS FILE#

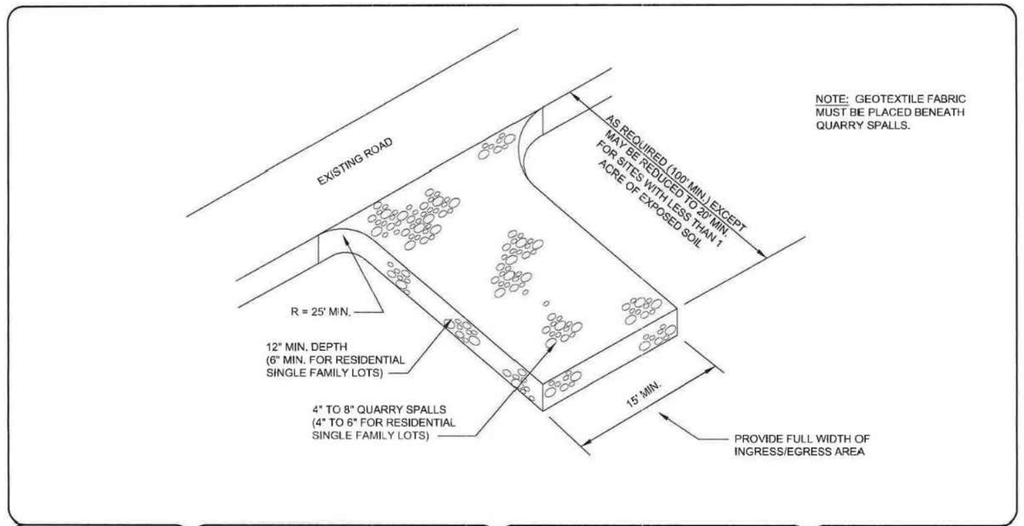

Pierce County
Public Works
Surface Water Management Division
2702 S 42nd Street, Suite 201
Tacoma, Washington 98409-7322

DATE	REVISION	APPR'D	DRAWN
6/2015	2015 SWMM UPDATE	HPH	RUTKOSKY
5/2008	PUBLISH DATE	HPH	RUTKOSKY

HANS P. HUNGER, P.E.
C.I.P. MANAGER

Surface Water Management Division

CONSTRUCTION ENTRANCE ROCK PAD

(NOT TO SCALE)

4.0

Storm Water Manual Details - Section C

1 D3.1 STABILIZED CONSTRUCTION ENTRANCE

SCALE: NTS

SWPPP NOTES:

1. APPROVAL OF THE CONSTRUCTION SWPPP DOES NOT CONSTITUTE AN APPROVAL OF PERMANENT ROAD OR DRAINAGE DESIGN (E.G., SIZE AND LOCATION OF ROADS, PIPES, RESTRICTIONS, CHANNELS, RETENTION/DETENTION/INFILTRATION FACILITIES, UTILITIES, ETC.)
2. THE IMPLEMENTATION OF THIS CONSTRUCTION SWPPP AND THE CONSTRUCTION, MAINTENANCE, REPLACEMENT, AND UPGRADING OF THESE CONSTRUCTION SWPPP FACILITIES IS THE RESPONSIBILITY OF THE CONTRACTOR UNTIL ALL CONSTRUCTION IS COMPLETED AND APPROVED AND VEGETATION/LANDSCAPING IS ESTABLISHED.
3. THE BOUNDARIES OF THE CLEARING LIMITS SHOWN ON THIS PLAN SHALL BE CLEARLY FLAGGED IN THE FIELD PRIOR TO CONSTRUCTION. DURING THE CONSTRUCTION PERIOD, NO DISTURBANCE BEYOND THE FLAGGED CLEARING LIMITS SHALL BE ALLOWED. THE FLAGGING SHALL BE MAINTAINED BY THE CONTRACTOR FOR THE DURATION OF CONSTRUCTION.
4. THE CONSTRUCTION SWPPP FACILITIES SHOWN ON THIS PLAN MUST BE CONSTRUCTED IN CONJUNCTION WITH ALL CLEARING AND GRADING ACTIVITIES, AND IN SUCH A MANNER AS TO INSURE THAT SEDIMENT AND SEDIMENT LADEN WATER DO NOT ENTER THE DRAINAGE SYSTEM, ROADWAYS, OR VIOLATE APPLICABLE WATER STANDARDS.
5. THE CONSTRUCTION SWPPP FACILITIES SHOWN ON THIS PLAN ARE THE MINIMUM REQUIREMENTS FOR ANTICIPATED SITE CONDITIONS. DURING THE CONSTRUCTION PERIOD, THESE CONSTRUCTION SWPPP FACILITIES SHALL BE UPGRADED AS NEEDED FOR UNEXPECTED STORM EVENTS AND TO ENSURE THAT SEDIMENT AND SEDIMENT-LADEN WATER DO NOT LEAVE THE SITE.
6. THE CONSTRUCTION SWPPP FACILITIES SHALL BE INSPECTED DAILY BY THE CONTRACTOR AND MAINTAINED AS NECESSARY TO ENSURE THEIR CONTINUED FUNCTIONING.
7. THE CONSTRUCTION SWPPP FACILITIES ON INACTIVE SITES SHALL BE INSPECTED AND MAINTAINED IN ACCORDANCE WITH THE NPDES PERMIT.

DEMOLITON & TESC NOTES:

1. QUANTITIES PROVIDED FOR CONTRACTOR INFORMATION ONLY. CONTRACTOR TO DERIVE THEIR OWN QUANTITIES.
2. STAGING AREA TO BE LOCATED WITHIN THE LIMIT OF WORK.
3. BOULDERS DISCOVERED DURING GRUBBING AND EXCAVATION THAT ARE LARGER THAN 1' DIA ARE TO BE SALVAGED AND STOCKPILED ON SITE FOR LATER USE AS DIRECTED BY PROJECT LANDSCAPE ARCHITECT. SMALLER BOULDERS ARE TO BE DISPOSED OF OFF SITE LEGALLY.
4. EROSION CONTROL MEASURES SHALL BE IN PLACE PRIOR TO THE BEGINNING OF CONSTRUCTION. THE PROJECT ENGINEER AND THE COUNTY SHALL INSPECT AND APPROVE THE INSTALLATION OF EROSION CONTROL MEASURES PRIOR TO BEGINNING CONSTRUCTION.
5. EROSION CONTROL MEASURES ARE NOT LIMITED TO THE ITEMS ON THIS PLAN. THE CONTRACTOR IS RESPONSIBLE FOR THE INSTALLATION AND MAINTENANCE OF ALL EROSION CONTROL MEASURES. NO SILTATION OF EXISTING OR PROPOSED DRAINAGE FACILITIES SHALL BE ALLOWED. CARE SHALL BE TAKEN TO PREVENT MIGRATION OF SILTS TO OFF-SITE PROPERTIES.
6. THE CONTRACTOR SHALL MAKE DAILY SURVEILLANCE OF ALL EROSION CONTROL MEASURES AND MAKE ANY NECESSARY REPAIRS OR ADDITIONS TO THE EROSION CONTROL MEASURES. THE CONTRACTOR SHALL PROVIDE ADDITIONAL EROSION CONTROL MEASURES AS DETERMINED NECESSARY BY THE COUNTY INSPECTOR AND/OR THE PROJECT ENGINEER.
7. DURING THE WET SEASON, NOVEMBER TO MARCH, ALL DISTURBED SOILS SHALL BE STABILIZED WITHIN 48 HOURS AFTER STOP OF WORK. EROSION CONTROL MEASURES SHALL INCLUDE, BUT ARE NOT LIMITED TO, COVERING THE EFFECTED AREA, INCLUDING SPOIL PILES, WITH PLASTIC SHEEETING, STRAW MATTING, JUTE MATTING, STRAW MULCH, OR WOOD CHIPS. SEEDING OF THE DISTURBED AREAS SHALL TAKE PLACE AS WEATHER PERMITS.
8. ALL SEEDED AREAS SHALL BE CHECKED REGULARLY TO MAKE SURE VEGETATION COVERAGE IS COMPLETE. AREAS SHALL BE REPAIRED, RESEEDED, AND FERTILIZED AS REQUIRED.
9. TRACKING OF SOIL OFF-SITE WILL NOT BE ALLOWED. IF ANY SOIL IS TRACKED ONTO A PUBLIC STREET IT SHALL BE REMOVED BY THE END OF THAT WORKING DAY, ANY FURTHER TRACKING OF MUD WILL THEN BE PREVENTED BY SWEEPING OR WASHING OF THE VEHICLE'S TIRES BEFORE DRIVING ON A PUBLIC STREET.
10. NO MORE THAN 500 LF OF TRENCH ON A DOWNSLOPE OR MORE THAN 5% SHALL BE OPENED AT ONE TIME
11. EXCAVATED MATERIAL SHALL BE PLACED ON THE UPHILL SIDE OF TRENCHES
12. TRENCH DEWATERING DEVICES SHALL BE DISCHARGED IN A MANOR THAT WILL NOT ADVERSELY AFFECT FLOWING STREAMS , DRAINAGE SYSTEMS, OR OFF-SITE PROPERTIES.
13. ALL DISTURBED AREAS SHALL BE PLANTED PER THE RESTORATION PLAN UPON COMPLETION OF WORK. THE CONTRACTOR SHALL BE RESPONSIBLE TO ENSURE THAT COMPLETE COVERAGE OF THE DISTURBED AREAS IS PROVIDED & THAT GROWTH OF THE VEGETATION IS MAINTAINED.

BID SET

PRIVATE IMPROVEMENTS

PERMIT # 1001191

DATE 01-05-2023

DEVELOPMENT ENGINEER

PIERCE COUNTY ORDINANCE NUMBER 2021-45

1. CONTACT Dennis Peterson THE AREA INSPECTOR, AT 253-798- 2539 TO COORDINATE THE PRE-CONSTRUCTION MEETING AND COUNTY INSPECTIONS. PRE-CONSTRUCTION MEETING SHALL BE REQUESTED AT LEAST 48-HOURS IN ADVANCE OF THE START OF CONSTRUCTION.
2. APPOINT A CERTIFIED EROSION AND SEDIMENT CONTROL LEAD WHO SHALL BE PROVIDED A COPY OF THE SWPPP, EROSION CONTROL PLAN & INSPECTION SCHEDULE.
3. FAILURE TO OBTAIN REQUIRED INSPECTIONS MAY ENDANGER OR DELAY PROJECT APPROVAL.
4. ALL WORK IN THE PUBLIC RIGHT-OF-WAY REQUIRES A GENERAL RIGHT-OF-WAY PERMIT FROM PIERCE COUNTY PLANNING AND PUBLIC WORKS.

CAD NO.

NO.	REVISIONS	INT.	APP.	DATE

ACTION	BY	DATE
DESIGNED		
DRAWN		
CHECKED (FIELD)		
CHECKED (HDQTS.)		

STATE OF WASHINGTON
JONAH HAYES
No. 24012382 EXP. 05/16/2026
LICENSED LANDSCAPE ARCHITECT

REGISTERED STAMP

WASHINGTON STATE PARKS AND RECREATION COMMISSION

NISQUALLY STATE PARK

PHASE 3A MAINTENANCE BUILDING AND WWTF

DEMO AND TESC DETAILS & NOTES

B-D2.1

SCALE
AS SHOWN

PARKS FILE#

MATERIALS SCHEDULE

SYMBOL	DESCRIPTION	QTY
	EQUESTRIAN PEDESTRIAN TRIAL	4,250 SF

KEYMAP (NTS)

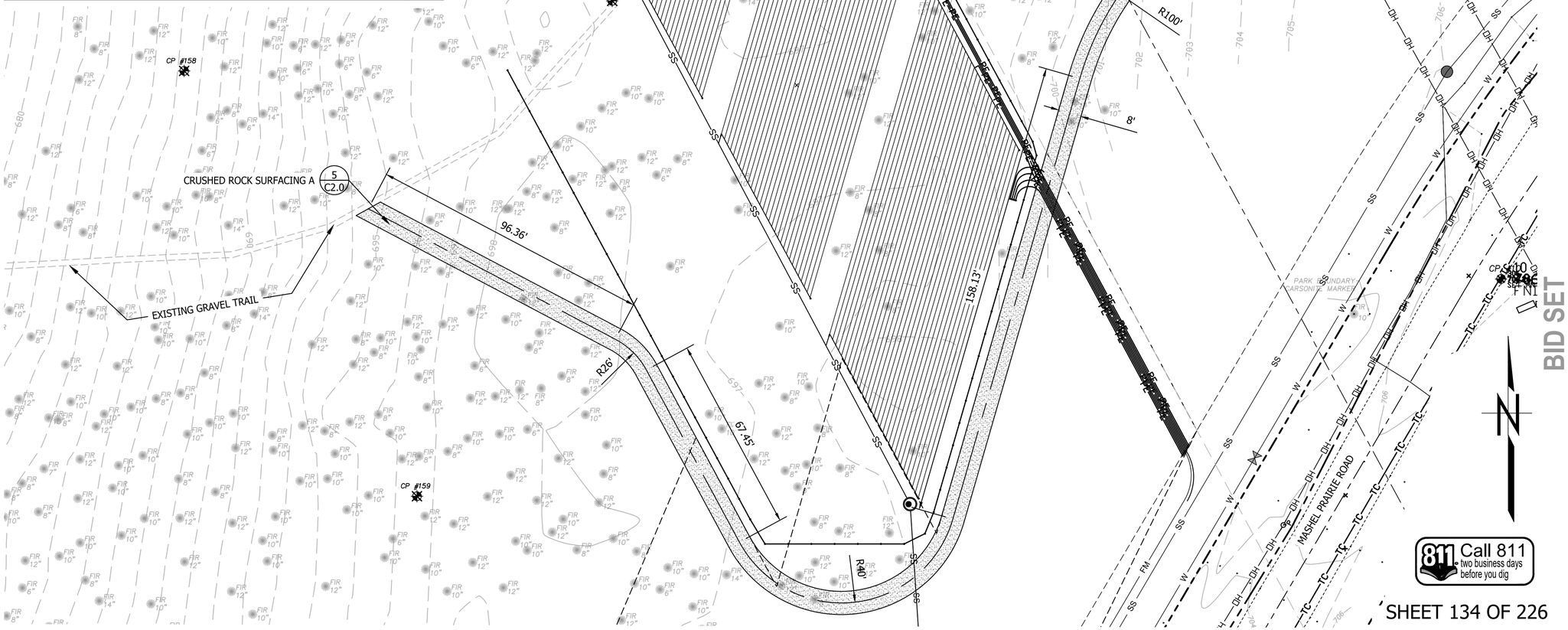

PRIVATE IMPROVEMENTS

1001191
PERMIT #

01-05-2023
DATE

DEVELOPMENT ENGINEER

PIERCE COUNTY ORDINANCE NUMBER 2021-45

1. CONTACT Dennis Peterson THE AREA INSPECTOR, AT 253-798- 2539 TO COORDINATE THE PRE-CONSTRUCTION MEETING AND COUNTY INSPECTIONS. PRE-CONSTRUCTION MEETING SHALL BE REQUESTED AT LEAST 48-HOURS IN ADVANCE OF THE START OF CONSTRUCTION.
2. APPOINT A CERTIFIED EROSION AND SEDIMENT CONTROL LEAD WHO SHALL BE PROVIDED A COPY OF THE SWPPP, EROSION CONTROL PLAN & INSPECTION SCHEDULE.
3. FAILURE TO OBTAIN REQUIRED INSPECTIONS MAY ENDANGER OR DELAY PROJECT APPROVAL.
4. ALL WORK IN THE PUBLIC RIGHT-OF-WAY REQUIRES A GENERAL RIGHT-OF-WAY PERMIT FROM PIERCE COUNTY PLANNING AND PUBLIC WORKS.

CAD NO.

NO.	REVISIONS	INT.	APP.	DATE

ACTION	BY	DATE
DESIGNED		
DRAWN		
CHECKED (FIELD)		
CHECKED (HDQTS.)		

STATE OF WASHINGTON
JONAH HAYES
No. 24012382 EXP. 05/16/2026
LICENSED LANDSCAPE ARCHITECT

REGISTERED STAMP

WASHINGTON STATE PARKS AND RECREATION COMMISSION

NISQUALLY STATE PARK

PHASE 3A MAINTENANCE BUILDING AND WWTF

SITE PLAN - DRAIN FIELD TRAIL B-C1.0

SCALE 20' 0 40'

PARKS FILE#

811 Call 811 two business days before you dig

SHEET 134 OF 226

O:\2018\180620 New Full Service Park Design Services\Drawings\Sheets\Phase 3\Bid Set 1 Maint, Pump, WWTF, Utility\B-C1.0 Site Plan - Drainfield Trail.dwg
Jan-08-25 9:55am

PRIVATE IMPROVEMENTS

1001191
PERMIT #

01-05-2023
DATE

DEVELOPMENT ENGINEER
PIERCE COUNTY ORDINANCE NUMBER 2021-45

1. CONTACT Dennis Peterson THE AREA INSPECTOR, AT 253-798- 2539 TO COORDINATE THE PRE-CONSTRUCTION MEETING AND COUNTY INSPECTIONS. PRE-CONSTRUCTION MEETING SHALL BE REQUESTED AT LEAST 48-HOURS IN ADVANCE OF THE START OF CONSTRUCTION.
2. APPOINT A CERTIFIED EROSION AND SEDIMENT CONTROL LEAD WHO SHALL BE PROVIDED A COPY OF THE SWPPP, EROSION CONTROL PLAN & INSPECTION SCHEDULE.
3. FAILURE TO OBTAIN REQUIRED INSPECTIONS MAY ENDANGER OR DELAY PROJECT APPROVAL.
4. ALL WORK IN THE PUBLIC RIGHT-OF-WAY REQUIRES A GENERAL RIGHT-OF-WAY PERMIT FROM PIERCE COUNTY PLANNING AND PUBLIC WORKS.

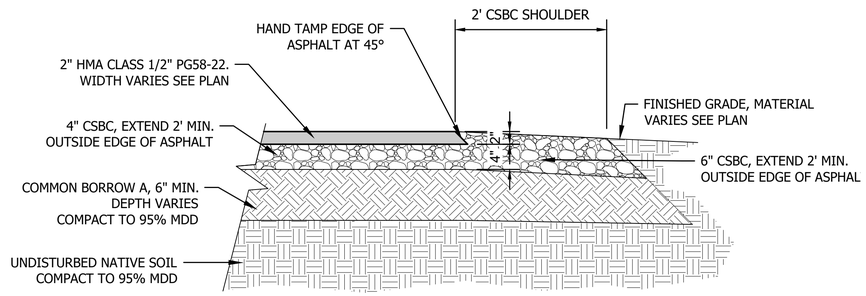

HMA PAVEMENT TYPE A

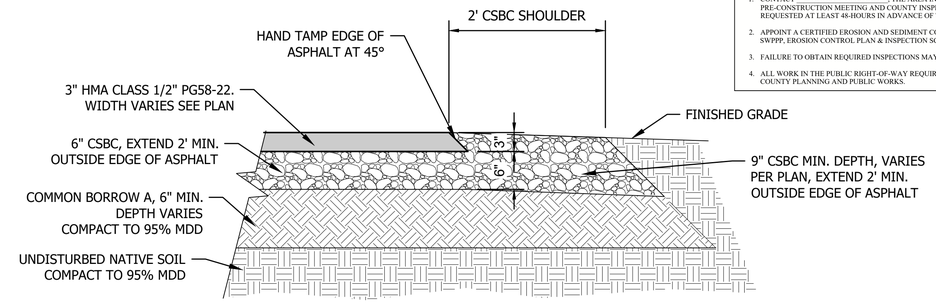

HMA PAVEMENT TYPE B

1 C2.0 HMA PAVEMENT TYPE A & B
SCALE: 1= 1'-0"

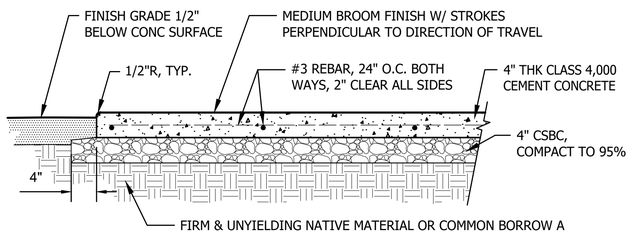

2 C2.0 CEMENT CONCRETE PAVEMENT A
SCALE: 1= 1'-0"

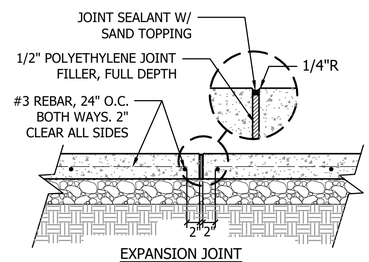

EXPANSION JOINT

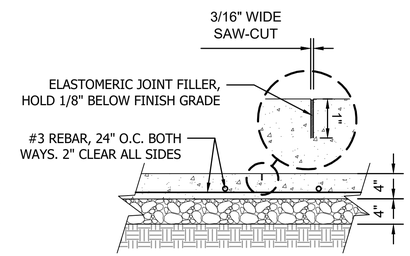

CONTROL JOINT

4 C2.0 CONTROL AND EXPANSION JOINTS
SCALE: 1= 1'-0"

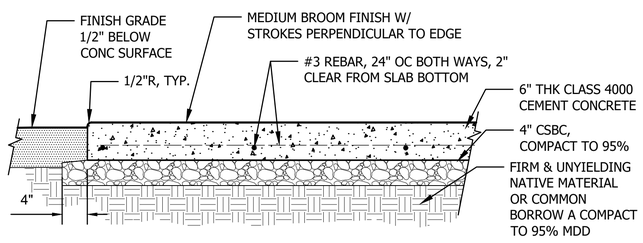

3 C2.0 CEMENT CONCRETE PAVEMENT B
SCALE: 1= 1'-0"

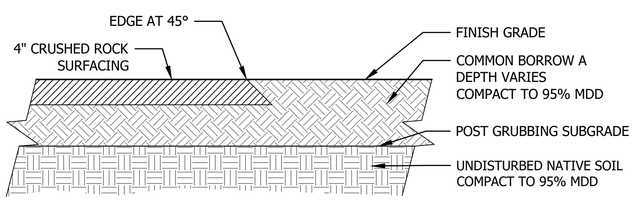

5 C2.0 CRUSHED ROCK SURFACING A
SCALE: 1= 1'-0"

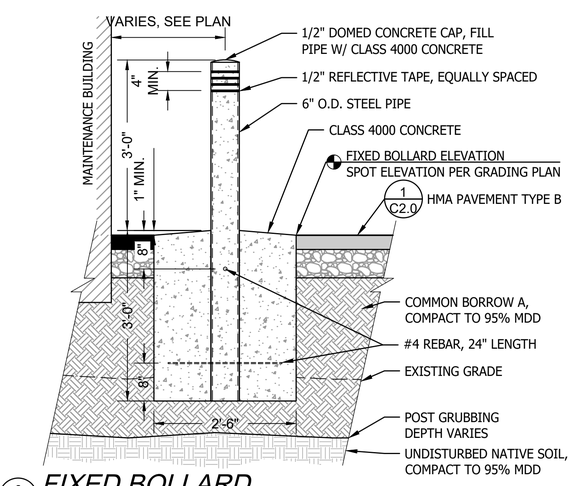

6 C2.0 FIXED BOLLARD
SCALE: 1" = 1'-0"

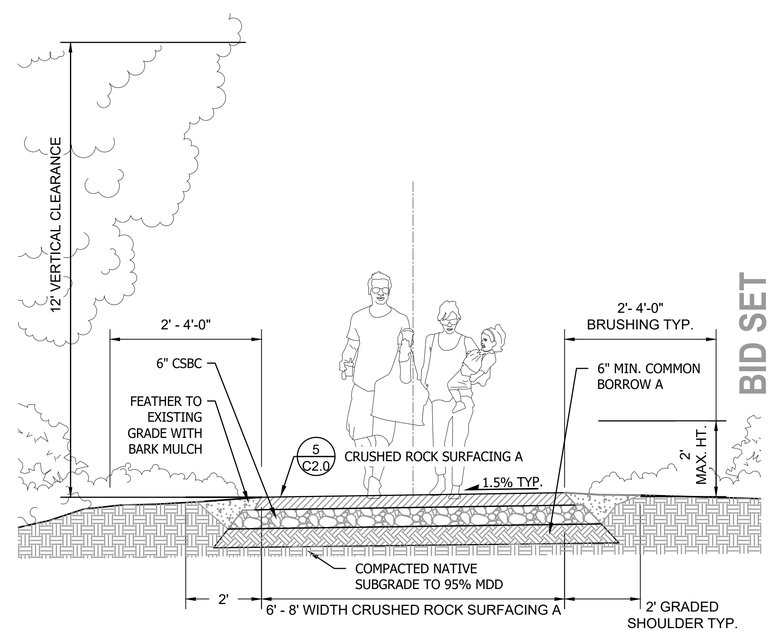

BID SET

7 C2.0 EQUESTRIAN PEDESTRIAN TRAIL
SCALE: 1/2" = 1'-0"

SHEET 135 OF 226

CAD NO.

NO.	REVISIONS	INT.	APP.	DATE

ACTION	BY	DATE
DESIGNED		
DRAWN		
CHECKED (FIELD)		
CHECKED (HDQTS.)		

STATE OF WASHINGTON · JONAH HAYES · No. 24012982 EXP. 05/18/2026 · LICENSED LANDSCAPE ARCHITECT

REGISTERED STAMP

WASHINGTON STATE PARKS AND RECREATION COMMISSION

NISQUALLY STATE PARK

PHASE 3A MAINTENANCE BUILDING AND WWTF

SITE DETAILS

B-C2.0

SCALE
AS SHOWN

PARKS FILE#

GRADING LEGEND:

XXX	PROPOSED INTERMEDIATE CONTOUR
XXX	PROPOSED INDEX CONTOUR
	GRADE BREAK
	LIMIT OF WORK
	DIRECTION OF SLOPE
662.3	FINISH GRADE ELEVATION
HP	HIGH POINT (CRUSHED SURFACING)
LP	LOW POINT (CRUSHED SURFACING)
ME	MATCH EXISTING

KEYMAP (NTS)

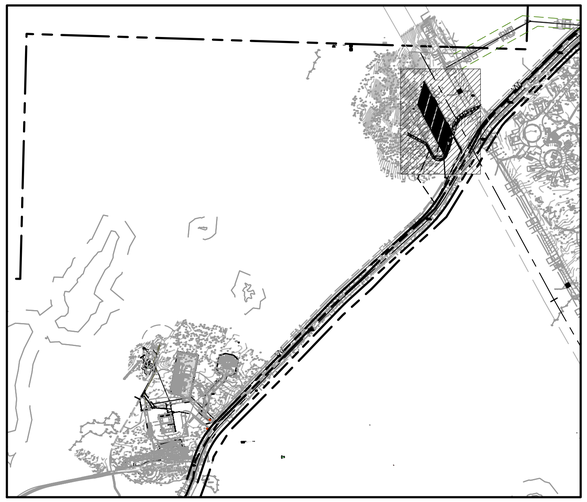

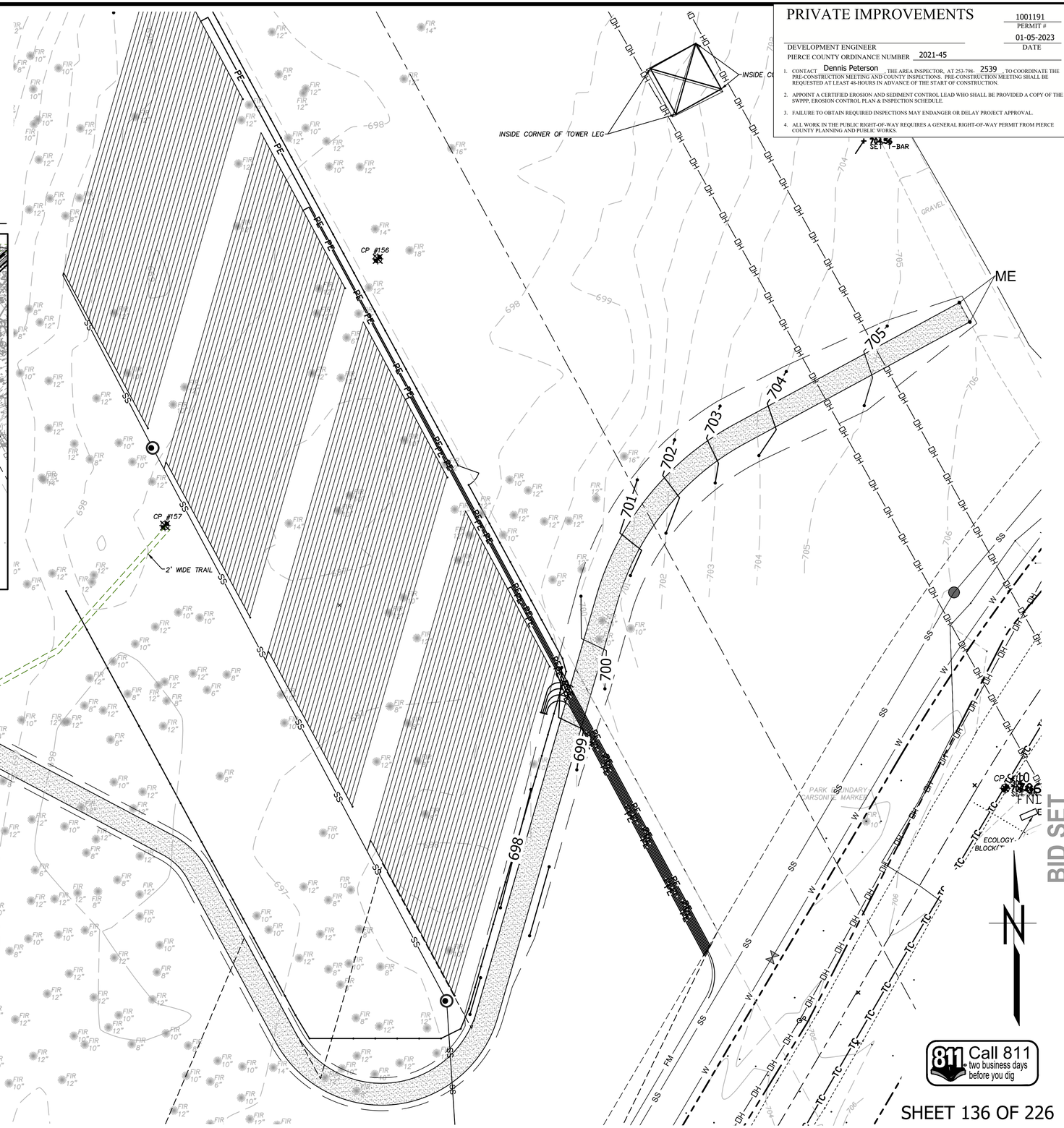

PRIVATE IMPROVEMENTS

1001191
PERMIT #

01-05-2023
DATE

DEVELOPMENT ENGINEER

PIERCE COUNTY ORDINANCE NUMBER 2021-45

1. CONTACT Dennis Peterson THE AREA INSPECTOR, AT 253-798- 2539 TO COORDINATE THE PRE-CONSTRUCTION MEETING AND COUNTY INSPECTIONS. PRE-CONSTRUCTION MEETING SHALL BE REQUESTED AT LEAST 48-HOURS IN ADVANCE OF THE START OF CONSTRUCTION.
2. APPOINT A CERTIFIED EROSION AND SEDIMENT CONTROL LEAD WHO SHALL BE PROVIDED A COPY OF THE SWPPP, EROSION CONTROL PLAN & INSPECTION SCHEDULE.
3. FAILURE TO OBTAIN REQUIRED INSPECTIONS MAY ENDANGER OR DELAY PROJECT APPROVAL.
4. ALL WORK IN THE PUBLIC RIGHT-OF-WAY REQUIRES A GENERAL RIGHT-OF-WAY PERMIT FROM PIERCE COUNTY PLANNING AND PUBLIC WORKS.

CAD NO.

NO.	REVISIONS	INT.	APP.	DATE

ACTION	BY	DATE
DESIGNED		
DRAWN		
CHECKED (FIELD)		
CHECKED (HDQTS.)		

STATE OF WASHINGTON
JONAH HAYES
No. 24012962 Exp. 05/16/2026
LICENSED LANDSCAPE ARCHITECT

REGISTERED STAMP

WASHINGTON STATE PARKS AND RECREATION COMMISSION

NISQUALLY STATE PARK

PHASE 3A MAINTENANCE BUILDING AND WWTF

GRADING PLAN - DRAIN FIELD TRAIL B-C3.0

BID SET

Call 811 two business days before you dig

SCALE 0 20' 40'

PARKS FILE#

SHEET 136 OF 226

Q:\2018\180624 New Full Service Park Design Services\Drawings\Sheets\Phase 3\Bid Set 1 Maint, Pump, WWTF, Utility\B-C3.0 Grading Plan - Drainfield Trail.dwg
Jan-08-25 9:57am

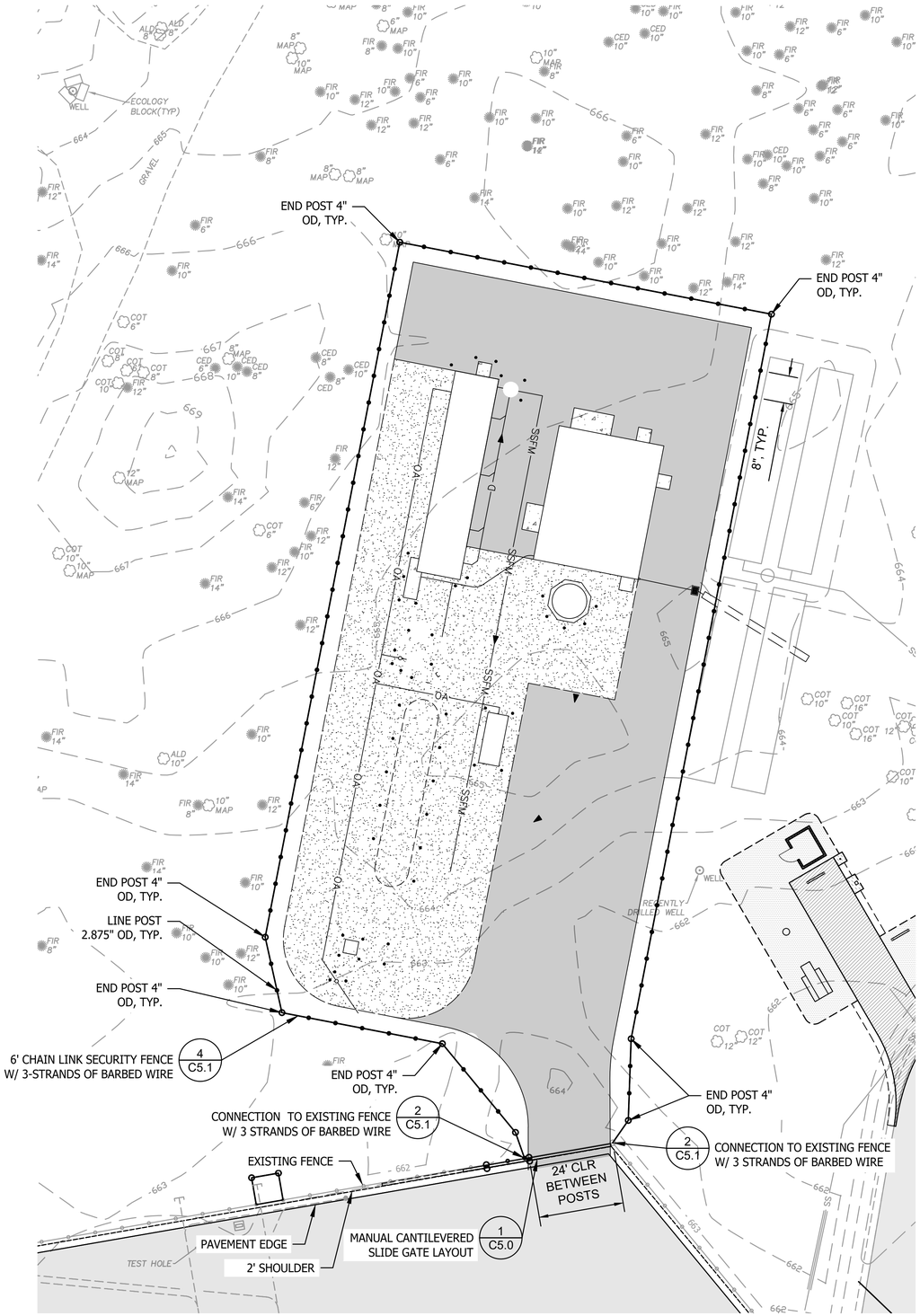

PRIVATE IMPROVEMENTS

1001191
PERMIT #

01-05-2023
DATE

DEVELOPMENT ENGINEER

PIERCE COUNTY ORDINANCE NUMBER 2021-45

1. CONTACT Dennis Peterson THE AREA INSPECTOR, AT 253-798- 2539 TO COORDINATE THE PRE-CONSTRUCTION MEETING AND COUNTY INSPECTIONS. PRE-CONSTRUCTION MEETING SHALL BE REQUESTED AT LEAST 48-HOURS IN ADVANCE OF THE START OF CONSTRUCTION.
2. APPOINT A CERTIFIED EROSION AND SEDIMENT CONTROL LEAD WHO SHALL BE PROVIDED A COPY OF THE SWPPP, EROSION CONTROL PLAN & INSPECTION SCHEDULE.
3. FAILURE TO OBTAIN REQUIRED INSPECTIONS MAY ENDANGER OR DELAY PROJECT APPROVAL.
4. ALL WORK IN THE PUBLIC RIGHT-OF-WAY REQUIRES A GENERAL RIGHT-OF-WAY PERMIT FROM PIERCE COUNTY PLANNING AND PUBLIC WORKS.

FENCE SCHEDULE

SYMBOL	DESCRIPTION	QTY	DETAIL
	6` CHAIN LINK SECURITY FENCE W/ 3 STRANDS OF BARBED WIRE	685 LF	2/C8.2
	MANUAL CANTILEVER SLIDE GATE		1/C8.1

NOTE:
1. 6' SECURITY FENCE TO HAVE 4"OD END AND TERMINAL POSTS, LINE POSTS TO BE 2.875"
2. SECURE PERMANENT FENCING TO 6' SECURITY FENCE W/ 5 WIRE TIES AT EQUAL SPACING.
3. THE PROPERTY OWNER IS RESPONSIBLE FOR MAINTAINING THE RAPID ENTRY DEVICES AT GATE IN AN OPERABLE CONDITION.
4. PRIOR TO REQUESTING A FINAL INSPECTION FROM THE DEVELOPMENT ENGINEERING SECTION THE APPLICANT SHALL SUBMIT A COPY OF THE COMPLETED GATE OPERATION TEST FORM.

BID SET

Call 811 two business days before you dig

SHEET 137 OF 226

CAD NO.

NO.	REVISIONS	INT.	APP.	DATE

ACTION	BY	DATE
DESIGNED		
DRAWN		
CHECKED (FIELD)		
CHECKED (HDQTS.)		

STATE OF WASHINGTON
JONAH HAYES
No. 24012362 EXP. 05/16/2025
LICENSED LANDSCAPE ARCHITECT

REGISTERED STAMP

WASHINGTON STATE PARKS AND RECREATION COMMISSION

NISQUALLY STATE PARK

PHASE 3A MAINTENANCE BUILDING AND WWTF

FENCE & GATE PLAN - WWTF

B-C4.0

SCALE
SCALE: 1"=20'
0' 10' 20' 30' 40'

PARKS FILE#

C:\2018\18062A New Full Service Park Design Services\Drawings\Sheets\Phase 3\Bid Set 1 Maint, Pump, WWTF, Utility\A-C7.0-7.1,B-C4.0,C4.1 Fence & Gate Plan.dwg
Jan-08-25 9:58am

PRIVATE IMPROVEMENTS

PERMIT #	1001191
DATE	01-05-2023

DEVELOPMENT ENGINEER

PIERCE COUNTY ORDINANCE NUMBER 2021-45

1. CONTACT Dennis Peterson THE AREA INSPECTOR, AT 253-798- 2539 TO COORDINATE THE PRE-CONSTRUCTION MEETING AND COUNTY INSPECTIONS. PRE-CONSTRUCTION MEETING SHALL BE REQUESTED AT LEAST 48-HOURS IN ADVANCE OF THE START OF CONSTRUCTION.
2. APPOINT A CERTIFIED EROSION AND SEDIMENT CONTROL LEAD WHO SHALL BE PROVIDED A COPY OF THE SWPPP, EROSION CONTROL PLAN & INSPECTION SCHEDULE.
3. FAILURE TO OBTAIN REQUIRED INSPECTIONS MAY ENDANGER OR DELAY PROJECT APPROVAL.
4. ALL WORK IN THE PUBLIC RIGHT-OF-WAY REQUIRES A GENERAL RIGHT-OF-WAY PERMIT FROM PIERCE COUNTY PLANNING AND PUBLIC WORKS.

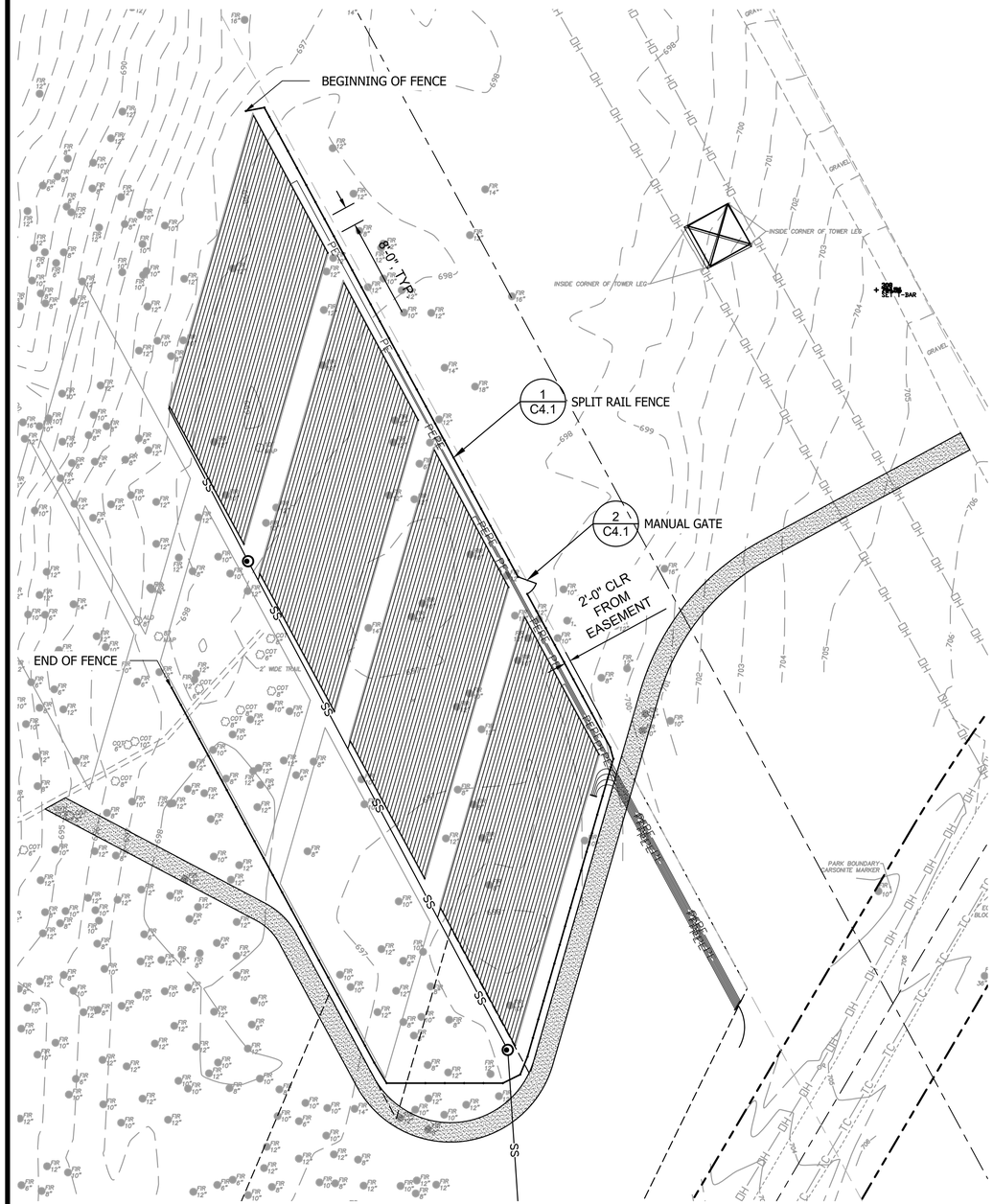

FENCE SCHEDULE

SYMBOL	DESCRIPTION	QTY	DETAIL
	SPLIT RAIL FENCE	445 LF	1/C4.1
	MANUAL GATE	1	2/C4.1

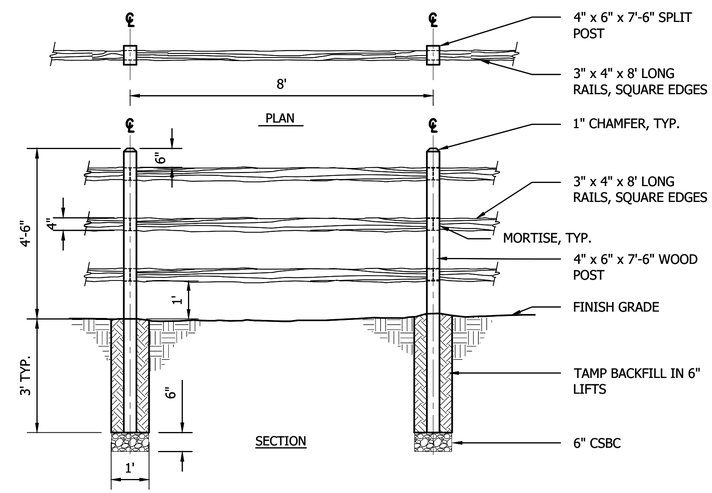

1 C4.1 *SPLIT RAIL FENCE*

SCALE: 1= 1'-0"

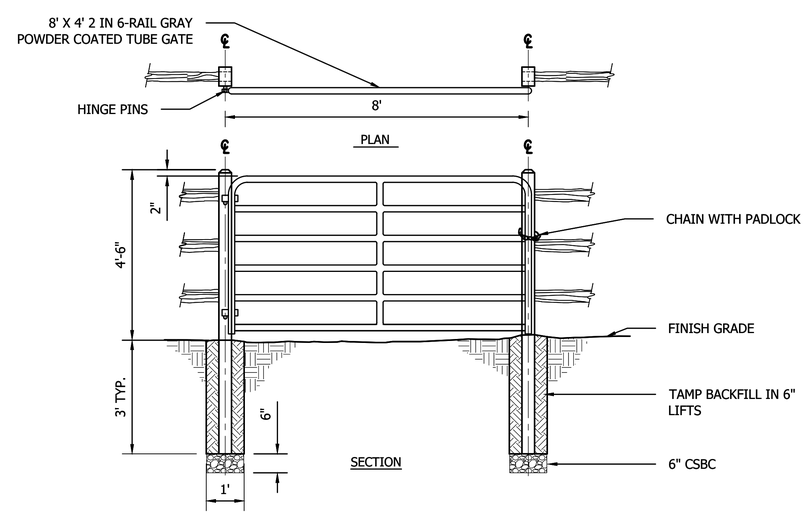

2 C4.1 *MANUAL GATE*

SCALE: 1= 1'-0"

BID SET

Call 811 two business days before you dig

SHEET 138 OF 226

CAD NO.		
	DATE	
	APP.	
	INT.	
	REVISIONS	
	NO.	

ACTION	BY	DATE
DESIGNED		
DRAWN		
CHECKED (FIELD)		
CHECKED (HDQTS.)		

STATE OF WASHINGTON JONAH HAYES No. 24012362 EXP. 09/16/2026 LICENSED LANDSCAPE ARCHITECT

REGISTERED STAMP

WASHINGTON STATE PARKS AND RECREATION COMMISSION

NISQUALLY STATE PARK

PHASE 3A MAINTENANCE BUILDING AND WWTF

FENCE & GATE PLAN - DRAIN FIELD

B-C4.1

SCALE

SCALE: 1"=30'

0 15' 30' 45' 60'

PARKS FILE#

C:\2018\180624 New Full Service Park Design Services\Drawings\Sheets\Phase 3\Bid Set 1 Maint, Pump, WWTF, Utility\A-C7.0-7.1,B-C4.0,C4.1 Fence & Gate Plan.dwg
Jan-08-23 9:58am

PRIVATE IMPROVEMENTS

1001191
PERMIT #

01-05-2023
DATE

DEVELOPMENT ENGINEER

PIERCE COUNTY ORDINANCE NUMBER 2021-45

1. CONTACT Dennis Peterson THE AREA INSPECTOR, AT 253-798- 2539 TO COORDINATE THE PRE-CONSTRUCTION MEETING AND COUNTY INSPECTIONS. PRE-CONSTRUCTION MEETING SHALL BE REQUESTED AT LEAST 48-HOURS IN ADVANCE OF THE START OF CONSTRUCTION.
2. APPOINT A CERTIFIED EROSION AND SEDIMENT CONTROL LEAD WHO SHALL BE PROVIDED A COPY OF THE SWPPP, EROSION CONTROL PLAN & INSPECTION SCHEDULE.
3. FAILURE TO OBTAIN REQUIRED INSPECTIONS MAY ENDANGER OR DELAY PROJECT APPROVAL.
4. ALL WORK IN THE PUBLIC RIGHT-OF-WAY REQUIRES A GENERAL RIGHT-OF-WAY PERMIT FROM PIERCE COUNTY PLANNING AND PUBLIC WORKS.

NOTES:

1. SURVEY NOT SHOWN FOR CLARITY.
2. ALL SAFETY DEVICES MUST CONFORM TO THE UL 325 APPROVED SAFETY DEVICES FOR HYSECURITY OPERATORS.
3. THE PROPERTY OWNER IS RESPONSIBLE FOR MAINTAINING THE RAPID ENTRY DEVICES IN AN OPERABLE CONDITION.
4. PRIOR TO FINAL INSPECTION FROM THE DEVELOPMENT ENGINEERING SECTION THE APPLICANT SHALL SUBMIT A COPY OF THE COMPLETED GATE OPERATION TEST FORM AND A COPY OF THE ELECTRICAL PERMIT. THE ELECTRICAL PERMIT SHALL BE FINALED AND COVER BOTH LINE AND LOW VOLTAGE SYSTEMS.
5. THE GATE LOCK SHALL DEFAULT TO THE UNLOCKED POSITION IN THE EVENT OF A LOSS OF ELECTRICAL POWER.
6. ALL GATES SHALL OPEN ON ACTIVATION OF THE KNOX KEY SWITCH AND SHALL REMAIN OPEN UNTIL MANUALLY RESET.
7. THE SAFTEY LOOP DETECTOR CIRCUIT SHALL PREVENT THE GATES FROM CLOSING ON A VEHICLE IN ITS PATH. AN EXIT LOOP DETECTOR CIRCUIT OR EMERGENCY VEHICLE STROBE DETECTOR RECEIVER SHALL AUTOMATICALLY OPEN THE GATE UPON EMERGENCY VEHICLE APPROACH TO THE EXIT GATE FROM INSIDE THE COMPLEX.
8. ELECTRICALLY OPERATED GATES REQUIRE A PERMIT FOR THE INSTALLATION OF LINE AND LOW VOLTAGE DEVICES. CONTACT THE APPROPRIATE PERMITTING AGENCY (STATE OR UTILITY COMPANY) FOR REQUIRED PERMITS. PIERCE COUNTY DOES NOT ISSUE ELECTRICAL PERMITS.

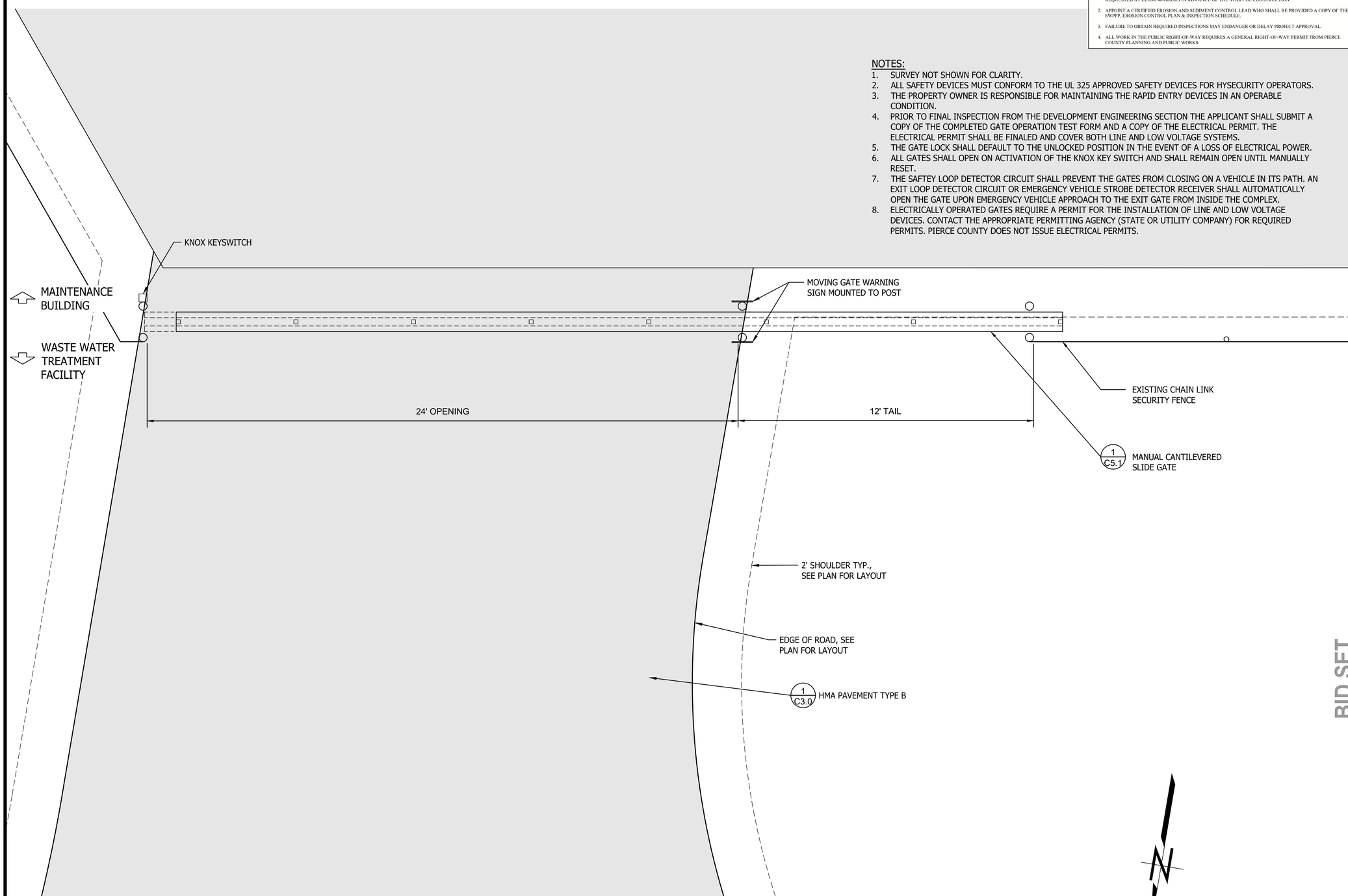

1 C5.0 *MANUAL CANTILEVERED SLIDE GATE LAYOUT*
SCALE: NOT TO SCALE

BID SET

CAD NO.

NO.	REVISIONS	INT.	APP.	DATE

ACTION	BY	DATE
DESIGNED		
DRAWN		
CHECKED (FIELD)		
CHECKED (HDQTS.)		

STATE OF WASHINGTON
JONAH HAYES
No. 24012362 Exp. 09/18/2026
LICENSED LANDSCAPE ARCHITECT

REGISTERED STAMP

WASHINGTON STATE PARKS AND RECREATION COMMISSION

NISQUALLY STATE PARK

PHASE 3A MAINTENANCE BUILDING AND WWTF

GATE LAYOUT - WWTF

B-C5.0

SCALE
AS SHOWN

PARKS FILE#

PRIVATE IMPROVEMENTS

1001191
PERMIT #

01-05-2023
DATE

DEVELOPMENT ENGINEER
PIERCE COUNTY ORDINANCE NUMBER 2021-45

1. CONTACT Dennis Peterson THE AREA INSPECTOR, AT 253-798- 2539 TO COORDINATE THE PRE-CONSTRUCTION MEETING AND COUNTY INSPECTIONS. PRE-CONSTRUCTION MEETING SHALL BE REQUESTED AT LEAST 48-HOURS IN ADVANCE OF THE START OF CONSTRUCTION.
2. APPOINT A CERTIFIED EROSION AND SEDIMENT CONTROL LEAD WHO SHALL BE PROVIDED A COPY OF THE SWPPP, EROSION CONTROL PLAN & INSPECTION SCHEDULE.
3. FAILURE TO OBTAIN REQUIRED INSPECTIONS MAY ENDANGER OR DELAY PROJECT APPROVAL.
4. ALL WORK IN THE PUBLIC RIGHT-OF-WAY REQUIRES A GENERAL RIGHT-OF-WAY PERMIT FROM PIERCE COUNTY PLANNING AND PUBLIC WORKS.

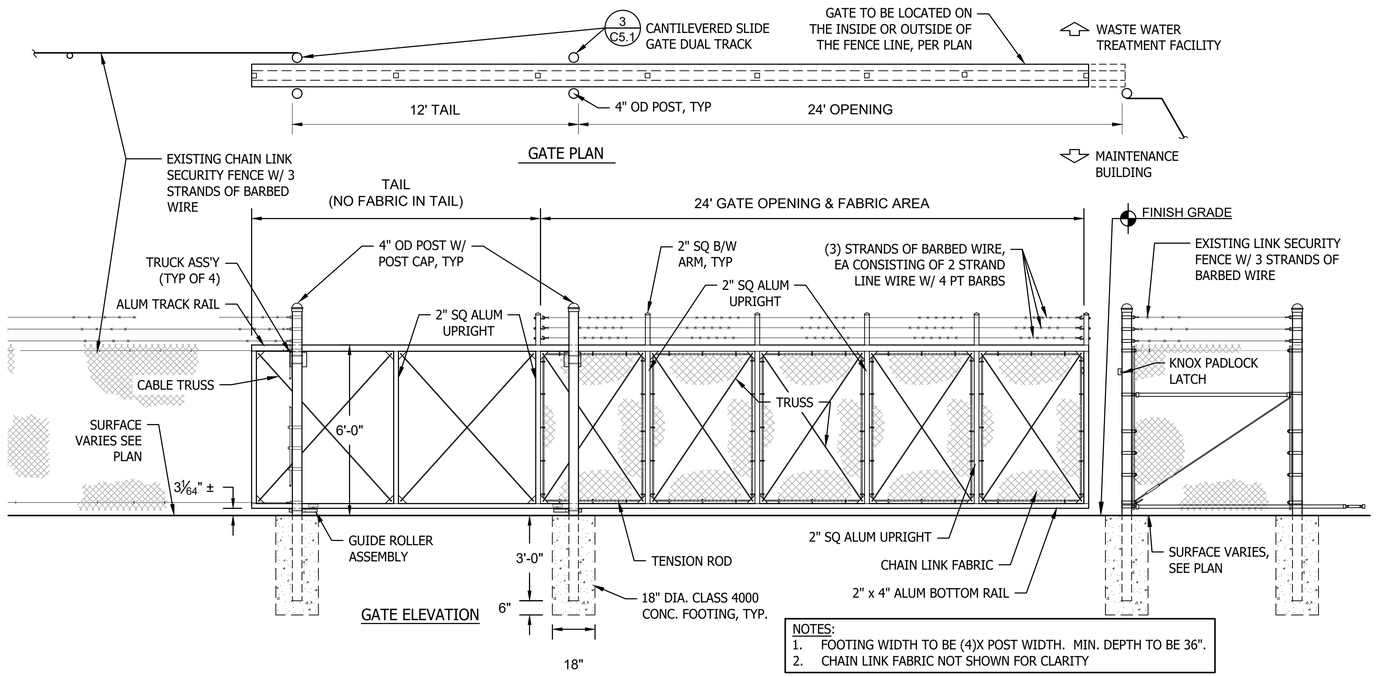

NOTES:
1. FOOTING WIDTH TO BE (4)X POST WIDTH. MIN. DEPTH TO BE 36".
2. CHAIN LINK FABRIC NOT SHOWN FOR CLARITY

1 C5.1 MANUAL CANTILEVERED SLIDE GATE
SCALE: NOT TO SCALE

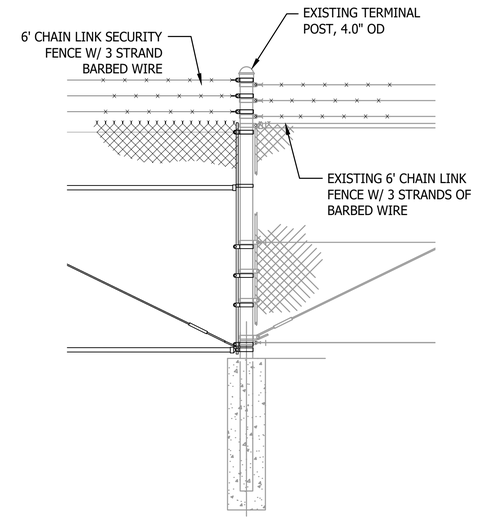

2 C5.1 CONNECTION TO EXISTING FENCE W/ 3 STRANDS OF BARBED WIRE
SCALE: 1/2" = 1'-0"

NOTE:
CHAIN LINK FABRIC & 3 STRAND BARBED WIRE NOT SHOWN FOR CLARITY.

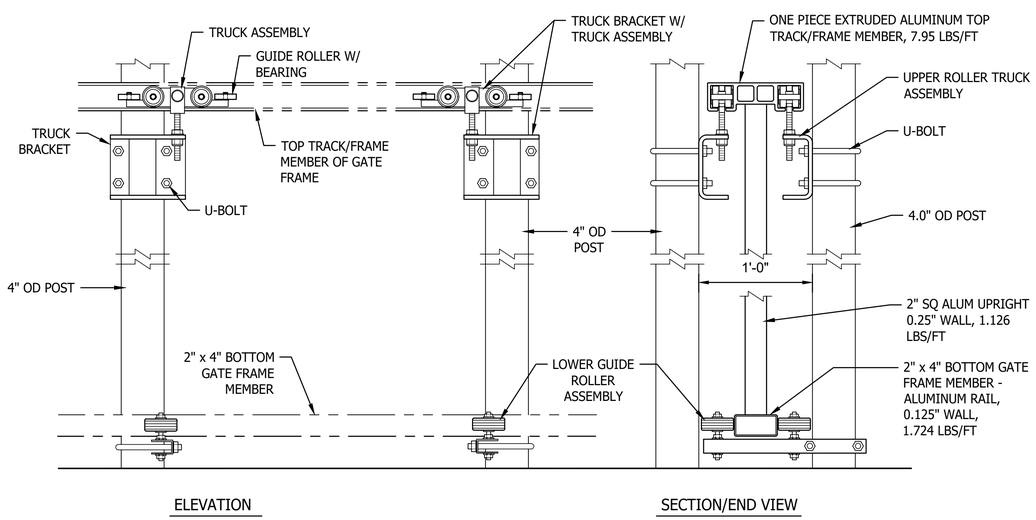

3 C5.1 CANTILEVERED SLIDE GATE DUAL TRACK
NOT TO SCALE

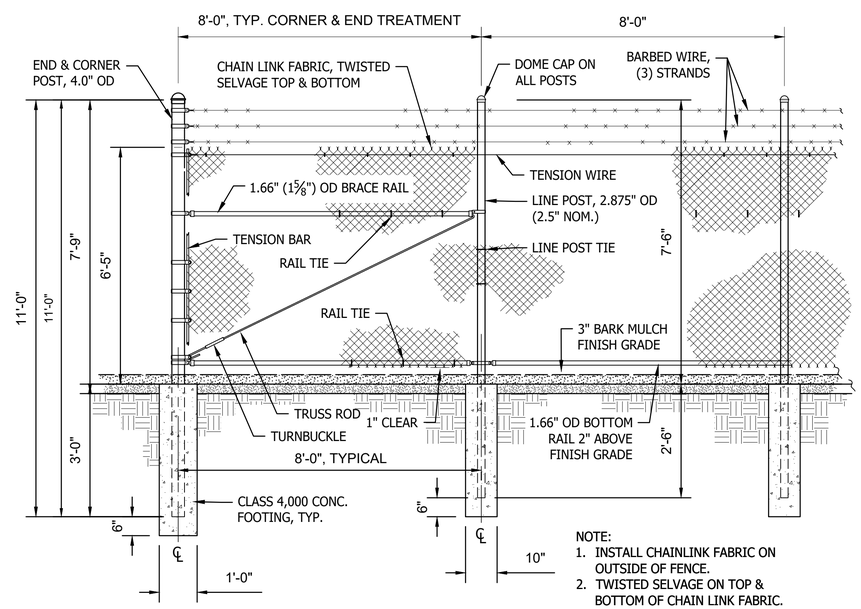

NOTE:
1. INSTALL CHAINLINK FABRIC ON OUTSIDE OF FENCE.
2. TWISTED SELVAGE ON TOP & BOTTOM OF CHAIN LINK FABRIC.

4 C5.1 6' CHAIN LINK SECURITY FENCE W/ 3 STRANDS OF BARBED WIRE
SCALE: 1/2" = 1'-0"

BID SET

SHEET 140 OF 226

CAD NO.

NO.	REVISIONS	INT.	APP.	DATE

ACTION	BY	DATE
DESIGNED		
DRAWN		
CHECKED (FIELD)		
CHECKED (HDQTS.)		

STATE OF WASHINGTON
JONAH HAYES
No. 24012362 EXP. 05/16/2026
LICENSED LANDSCAPE ARCHITECT

REGISTERED STAMP

WASHINGTON STATE PARKS AND RECREATION COMMISSION

NISQUALLY STATE PARK

PHASE 3A MAINTENANCE BUILDING AND WWTF

FENCE & GATE DETAILS - WWTF

B-C5.1

SCALE
AS SHOWN

PARKS FILE#

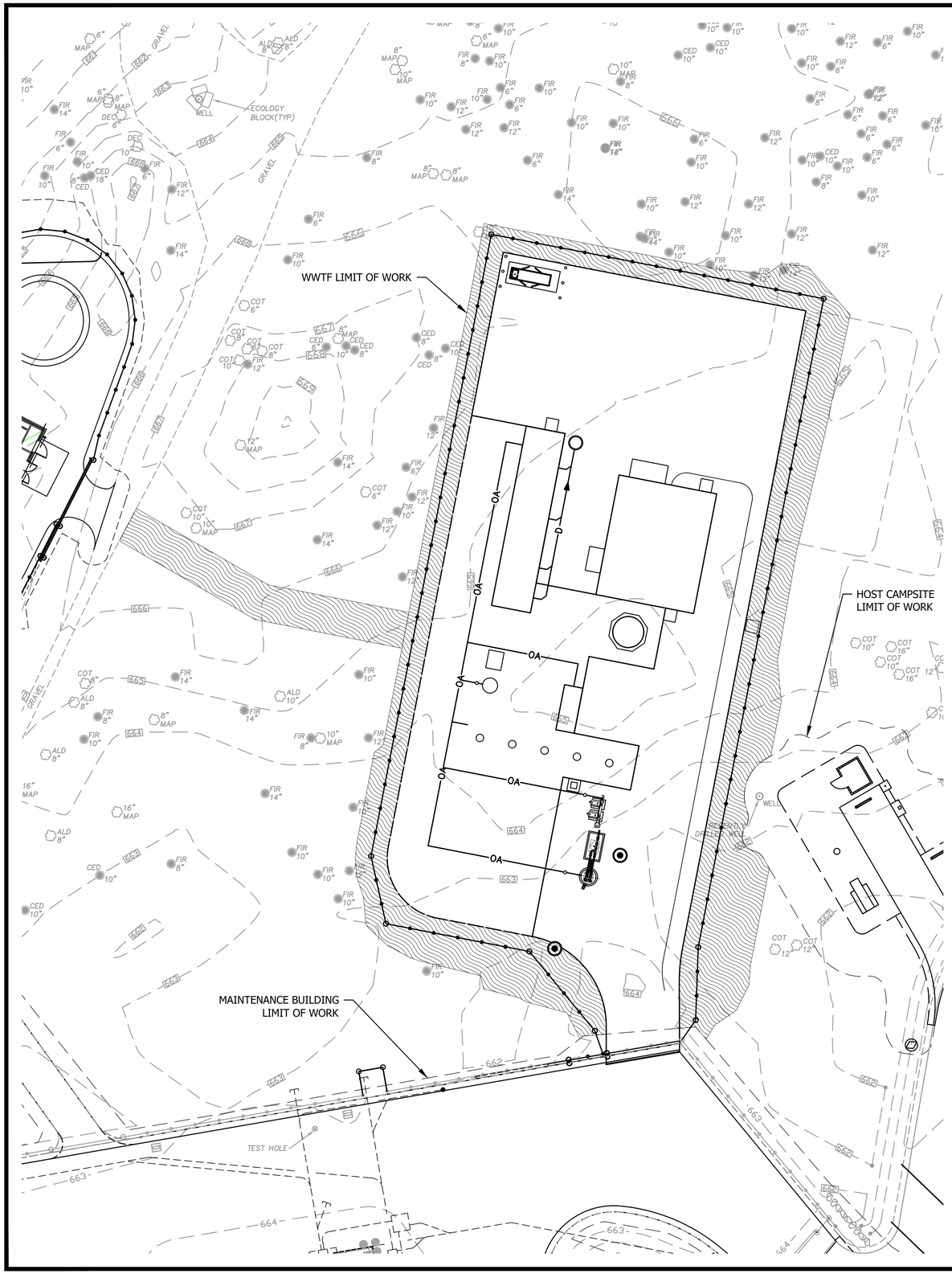

PRIVATE IMPROVEMENTS

1001191
PERMIT #

01-05-2023
DATE

DEVELOPMENT ENGINEER

PIERCE COUNTY ORDINANCE NUMBER 2021-45

1. CONTACT Dennis Peterson THE AREA INSPECTOR, AT 253-798- 2539 TO COORDINATE THE PRE-CONSTRUCTION MEETING AND COUNTY INSPECTIONS. PRE-CONSTRUCTION MEETING SHALL BE REQUESTED AT LEAST 48-HOURS IN ADVANCE OF THE START OF CONSTRUCTION.
2. APPOINT A CERTIFIED EROSION AND SEDIMENT CONTROL LEAD WHO SHALL BE PROVIDED A COPY OF THE SWPPP, EROSION CONTROL PLAN & INSPECTION SCHEDULE.
3. FAILURE TO OBTAIN REQUIRED INSPECTIONS MAY ENDANGER OR DELAY PROJECT APPROVAL.
4. ALL WORK IN THE PUBLIC RIGHT-OF-WAY REQUIRES A GENERAL RIGHT-OF-WAY PERMIT FROM PIERCE COUNTY PLANNING AND PUBLIC WORKS.

PLANT & TOPSOIL SCHEDULE

PLANT MIX W/ 3" TOPSOIL TYPE A & 3" WOOD CHIPS	9,240 SF	SIZE	SPACING
MAHONIA AQUIFOLIUM / OREGON GRAPE	280	PLUG,	30% @ 36" oc
POLYSTICHUM MUNITUM / WESTERN SWORD FERN	280	PLUG,	30% @ 36" oc
SYMPHORICARPOS ALBUS / COMMON WHITE SNOWBERRY	380	PLUG,	40% @ 36" oc

PLANTING IMPROVEMENTS GENERAL NOTES

1. CONTRACTOR IS REQUIRED TO VERIFY UTILITY LOCATIONS PRIOR TO CONSTRUCTION. CONTRACTOR SHALL CALL THE UTILITIES UNDERGROUND LOCATION CENTER (1-800-424-5555) AT LEAST TWO DAYS PRIOR TO CONSTRUCTION.
2. CONTRACTOR SHALL COORDINATE ALL WORK WITH THE GENERAL CONTRACTOR. ALL CONSTRUCTION CONFLICTS SHALL BE BROUGHT TO THE ATTENTION OF THE GENERAL CONTRACTOR AND CONSTRUCTION OBSERVER IMMEDIATELY UPON RECOGNITION.
3. CONTRACTOR IS RESPONSIBLE FOR A THOROUGH CLEAN-UP FOR THEIR RESPECTIVE WORK, DAILY AND AT PROJECT CLOSE-OUT.
4. CONTRACTOR IS RESPONSIBLE FOR PROTECTING ALL EXISTING IMPROVEMENTS. DAMAGE TO THE EXISTING IMPROVEMENTS BY THE CONTRACTOR SHALL BE REPAIRED OR REPLACED BY THE CONTRACTOR AND/OR QUALIFIED INSTALLERS/TRADES ACCEPTABLE TO THE SOLE SATISFACTION OF THE CONSTRUCTION OBSERVER AND AT NO COST TO THE OWNER.
5. PLANT MATERIALS SHALL MEET STANDARDS SET FORTH IN THE LATEST EDITION OF THE AMERICAN ASSOCIATION OF NURSERYMEN STANDARD (ANSI Z60.1) AND WASHINGTON STATE STANDARDS FOR NURSERY STOCK ORDER NO. 1627. ALL PLANT MATERIALS SHALL HAVE SUFFICIENT ROOT DEVELOPMENT TO ASSURE SURVIVAL AND HEALTHY GROWTH. CONTAINER GROWN PLANT MATERIALS ARE REQUIRED TO HAVE SUFFICIENT ROOT GROWTH TO HOLD THE SOIL INTACT WHEN REMOVED FORM THE CONTAINER, BUT SHALL NOT BE ROOT BOUND.
6. NO SUBSTITUTIONS SHALL BE CONSIDERED FOR PLANTS OR OTHER MATERIALS DURING THE BIDDING PROCESS.
6. CONTRACTOR SHALL WATER IN ALL PLANTS AT TIME OF PLANTING.
7. CONTRACTOR IS RESPONSIBLE OF KEEPING ROOT ZONES OF TREES MOIST UNTIL PROJECTS FINAL ACCEPTANCE.

KEYMAP (NTS)

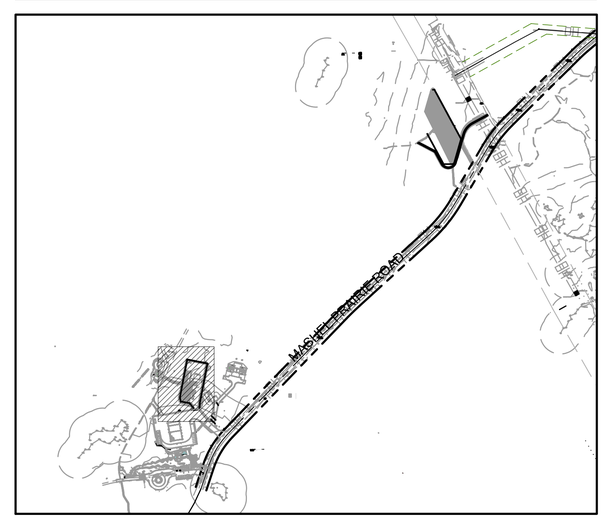

BID SET

Call 811 two business days before you dig

SHEET 141 OF 226

CAD NO.

NO.	REVISIONS	INT.	APP.	DATE

ACTION	BY	DATE
DESIGNED		
DRAWN		
CHECKED (FIELD)		
CHECKED (HDQTS.)		

STATE OF WASHINGTON · JONAH HAYES · No. 24012382 Exp. 05/10/2026 · LICENSED LANDSCAPE ARCHITECT

REGISTERED STAMP

WASHINGTON STATE PARKS AND RECREATION COMMISSION

NISQUALLY STATE PARK

PHASE 3A MAINTENANCE BUILDING AND WWTF

RESTORATION PLAN - WWTF

B-L1.0

SCALE

SCALE: 1"=20'

0' 10' 20' 30' 40'

PARKS FILE#

O:\2018\18052A New Full Service Park Design Services\Drawings\Sheets\Phase 3\Bid Set 1 Maint, Pump, WWTF, Utility\B-L1.0-1.1 Restoration Plan.dwg
Jan-08-25 10:00am

PRIVATE IMPROVEMENTS

1001191
PERMIT #

01-05-2023
DATE

DEVELOPMENT ENGINEER

PIERCE COUNTY ORDINANCE NUMBER 2021-45

1. CONTACT Dennis Peterson THE AREA INSPECTOR, AT 253-798- 2539 TO COORDINATE THE PRE-CONSTRUCTION MEETING AND COUNTY INSPECTIONS. PRE-CONSTRUCTION MEETING SHALL BE REQUESTED AT LEAST 48-HOURS IN ADVANCE OF THE START OF CONSTRUCTION.
2. APPOINT A CERTIFIED EROSION AND SEDIMENT CONTROL LEAD WHO SHALL BE PROVIDED A COPY OF THE SWPPP, EROSION CONTROL PLAN & INSPECTION SCHEDULE.
3. FAILURE TO OBTAIN REQUIRED INSPECTIONS MAY ENDANGER OR DELAY PROJECT APPROVAL.
4. ALL WORK IN THE PUBLIC RIGHT-OF-WAY REQUIRES A GENERAL RIGHT-OF-WAY PERMIT FROM PIERCE COUNTY PLANNING AND PUBLIC WORKS.

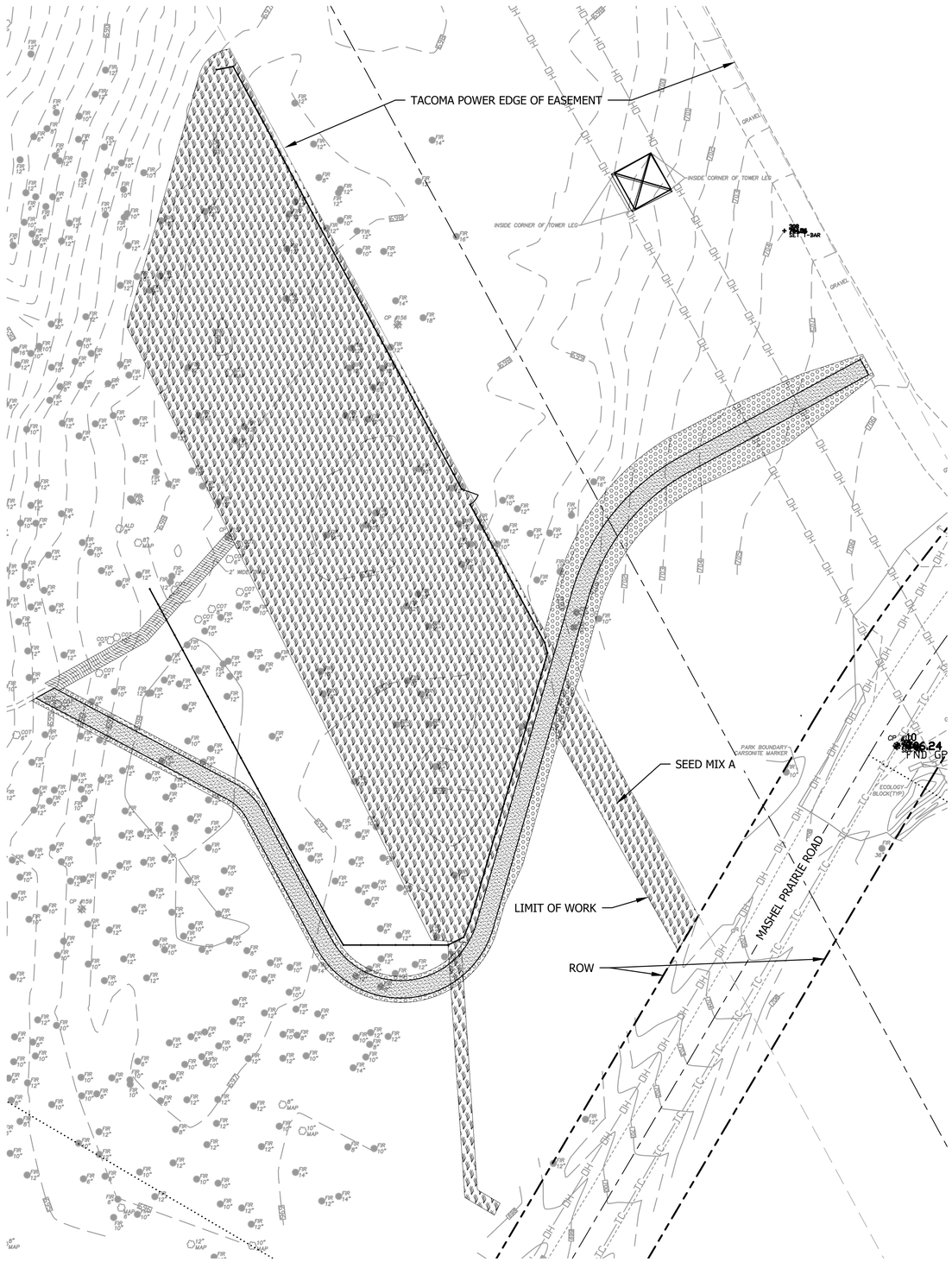

PLANT & TOPSOIL SCHEDULE

3" TOPSOIL TYPE A W/ SEED MIX A	38,040 SF		
SEED MIX A TO BE 50/50 MIX OF NATIVE UPLANDS MIX AND WOODLANDS MIX BY SUNMARK SEEDS			
CLEAR AND GRUB EX. TRAIL TO 6" DEPTH AND RESTORE	510 SF		
RESTORE WITH 3" TOPSOIL TYPE A & 3" WOOD CHIPS			
MAHONIA AQUIFOLIUM / OREGON GRAPE	20	PLUG	30% @ 36" oc
POLYSTICHUM MUNITUM / WESTERN SWORD FERN	20	PLUG	30% @ 36" oc
SYMPHORICARPOS ALBUS / COMMON WHITE SNOWBERRY	26	PLUG	40% @ 36" oc
3" WOOD CHIPS	4,790 SF		

PLANTING IMPROVEMENTS GENERAL NOTES

1. CONTRACTOR IS REQUIRED TO VERIFY UTILITY LOCATIONS PRIOR TO CONSTRUCTION. CONTRACTOR SHALL CALL THE UTILITIES UNDERGROUND LOCATION CENTER (1-800-424-5555) AT LEAST TWO DAYS PRIOR TO CONSTRUCTION.
2. CONTRACTOR SHALL COORDINATE ALL WORK WITH THE GENERAL CONTRACTOR. ALL CONSTRUCTION CONFLICTS SHALL BE BROUGHT TO THE ATTENTION OF THE GENERAL CONTRACTOR AND CONSTRUCTION OBSERVER IMMEDIATELY UPON RECOGNITION.
3. CONTRACTOR IS RESPONSIBLE FOR A THOROUGH CLEAN-UP FOR THEIR RESPECTIVE WORK, DAILY AND AT PROJECT CLOSE-OUT.
4. CONTRACTOR IS RESPONSIBLE FOR PROTECTING ALL EXISTING IMPROVEMENTS. DAMAGE TO THE EXISTING IMPROVEMENTS BY THE CONTRACTOR SHALL BE REPAIRED OR REPLACED BY THE CONTRACTOR AND/OR QUALIFIED INSTALLERS/TRADES ACCEPTABLE TO THE SOLE SATISFACTION OF THE CONSTRUCTION OBSERVER AND AT NO COST TO THE OWNER.
5. NO SUBSTITUTIONS SHALL BE CONSIDERED FOR PLANTS OR OTHER MATERIALS DURING THE BIDDING PROCESS.

KEYMAP (NTS)

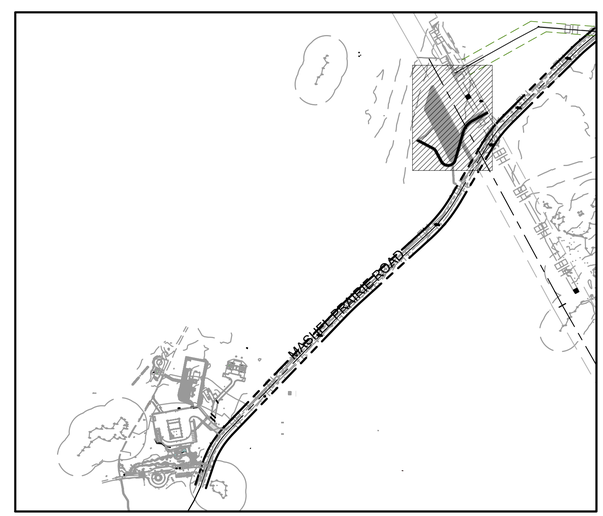

Call 811 two business days before you dig

SHEET 142 OF 226

BID SET

CAD NO.

NO.	REVISIONS	INT.	APP.	DATE

ACTION	BY	DATE
DESIGNED		
DRAWN		
CHECKED (FIELD)		
CHECKED (HDQTS.)		

STATE OF WASHINGTON
JONAH HAYES
No. 24012362 Exp. 05/10/2026
LICENSED LANDSCAPE ARCHITECT

REGISTERED STAMP

WASHINGTON STATE PARKS AND RECREATION COMMISSION

NISQUALLY STATE PARK

PHASE 3A MAINTENANCE BUILDING AND WWTF

RESTORATION PLAN - DRAIN FIELD B-L1.1

SCALE

SCALE: 1"=30'

0 15' 30' 45' 60'

PARKS FILE#

G:\2018\18062A New Full Service Park Design Services\Drawings\Sheets\Phase 3\Bid Set 1 Maint, Pump, WWTF, Utility\B-L1.0-1.1 Restoration Plan.dwg
Jan-08-25 10:01am

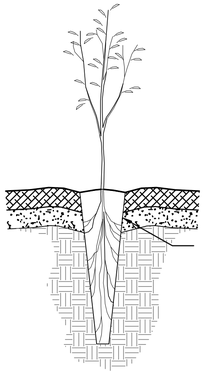

1. MAKE A SUITABLE HOLE WITH A ROCK BAR OR EQUIVALENT PLANTING TOOL.
2. REMOVE PLUG FROM CONTAINER AND INSTALL DIRECTLY INTO NATIVE SOIL.
3. GENTLY PRESS SOIL AROUND PLUG BY STEPPING LIGHTLY ON SOIL NEXT TO THE PLUG.

1 / L2.0 PLUG & CONE-TAINER PLANTING

SCALE: NTS

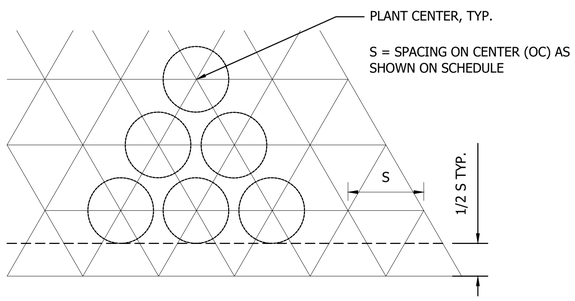

2 / L2.0 TRIANGULAR PLANT SPACING

SCALE: NOT TO SCALE

PRIVATE IMPROVEMENTS

1001191
PERMIT #

01-05-2023
DATE

DEVELOPMENT ENGINEER

PIERCE COUNTY ORDINANCE NUMBER 2021-45

1. CONTACT Dennis Peterson THE AREA INSPECTOR, AT 253-798- 2539 TO COORDINATE THE PRE-CONSTRUCTION MEETING AND COUNTY INSPECTIONS. PRE-CONSTRUCTION MEETING SHALL BE REQUESTED AT LEAST 48-HOURS IN ADVANCE OF THE START OF CONSTRUCTION.
2. APPOINT A CERTIFIED EROSION AND SEDIMENT CONTROL LEAD WHO SHALL BE PROVIDED A COPY OF THE SWPPP, EROSION CONTROL PLAN & INSPECTION SCHEDULE.
3. FAILURE TO OBTAIN REQUIRED INSPECTIONS MAY ENDANGER OR DELAY PROJECT APPROVAL.
4. ALL WORK IN THE PUBLIC RIGHT-OF-WAY REQUIRES A GENERAL RIGHT-OF-WAY PERMIT FROM PIERCE COUNTY PLANNING AND PUBLIC WORKS.

CAD NO.

NO.	REVISIONS	INT.	APP.	DATE

ACTION	BY	DATE
DESIGNED		
DRAWN		
CHECKED (FIELD)		
CHECKED (HDQTS.)		

STATE OF WASHINGTON
JONAH HAYES
No. 24012362 EXP 05/16/2026
LICENSED LANDSCAPE ARCHITECT

REGISTERED STAMP

WASHINGTON STATE PARKS AND RECREATION COMMISSION

NISQUALLY STATE PARK

PHASE 3A MAINTENANCE BUILDING AND WWTF RESTORATION PLANTING DETAILS

B-L2.0

SCALE

PARKS FILE#

BID SET

Call 811 two business days before you dig

SHEET 143 OF 226

G:\2018\180624 New Full Service Park Design Services\Drawings\Sheets\Phase 3\Bid Set 1 Maint, Pump, WWTF, Utility\Schedule B\B-L2.0 Restoration Planting Details.dwg
Jan-08-25 10:02am

DESIGN TEAM:

OWNER/CLIENT:

WASHINGTON STATE PARKS
AND RECREATION COMMISSION
1111 ISRAEL ROAD SW
P.O. BOX 42650
OLYMPIA, WA 98504-2650

OWNER'S REPRESENTATIVE:

WASHINGTON STATE PARKS
AND RECREATION COMMISSION
SPECIAL PROJECTS
1111 ISRAEL ROAD SW
PO BOX 42650
OLYMPIA, WA 98504-2650

BRIAN YEAROUT
PROJECT MANAGER
TEL (360) 725-9763

Parametrix

A/E PROJECT MANAGER:

PARAMETRIX, INC.
1019 39TH AVE SE, SUITE 100
PUYALLUP, WA 98374

BRIAN BUNKER, P.E.
TEL (253) 604-6798
CELL (360) 620-0093
BBUNKER@PARAMETRIX.COM

CIVIL:

PARAMETRIX, INC.
1019 39TH AVE SE, SUITE 100
PUYALLUP, WA 98374

BRIAN BUNKER, P.E.
TEL (253) 604-6798
CELL (360) 620-0093
BBUNKER@PARAMETRIX.COM

ELECTRICAL:

PARAMETRIX, INC.
1019 39TH AVENUE SE, SUITE 100
PUYALLUP, WA 98374

MARVIN CASANOVA, P.E.
TEL (253) 604-6559
CELL (253) 255-8201
MCASANOVA@PARAMETRIX.COM

MECHANICAL:

PARAMETRIX, INC.
1019 39TH AVENUE SE, SUITE 100
PUYALLUP, WA 98374

BRIAN BUNKER, P.E.
TEL (253) 604-6798
CELL (360) 620-0093
BBUNKER@PARAMETRIX.COM

STRUCTURAL:

PARAMETRIX, INC.
1019 39TH AVENUE SE, SUITE 100
PUYALLUP, WA 98374

JACOB LINKE, P.E.
TEL (253) 528-9911
JWLINKE@PARAMETRIX.COM

ARCHITECT:

KMB ARCHITECTS
906 COLUMBIA ST SW, SUITE 400
OLYMPIA, WA 98501

MBR FACILITY EQUIPMENT:

KUBOTA MEMBRANE USA
11807 NORTH CREEK PARKWAY S
SUITE B-109
BOTHELL, WA 98011

SHINGO KUBO, M.S.
TEL (425) 534-1006
SHINGO.KUBO@KUBOTA.COM

SHEET INDEX

DWG. NO.	SHEET TITLE
B-G2.0	DRAWING INDEX AND DESIGN TEAM
B-G3.0	LEGEND, ABBREVIATIONS AND NOTES
B-P1.0	MBR SYSTEM DESIGN DATA
B-P1.1	P&ID DIAGRAM LEGEND & ABBREVIATIONS
B-P2.0	INFLUENT PUMP STATION P&ID
B-P2.1	MBR FEED PUMP STATION P&ID
B-P3.0	MBR SYSTEM PROCESS FLOW DIAGRAM
B-P4.0	MBR SYSTEM HYDRAULIC PROFILE
B-C1.0	OVERALL SITE PLAN
B-C1.1	DRAINFIELD SITE PLAN
B-C1.2	EFFLUENT FORCE MAIN PLAN AND PROFILE
B-C1.3	EFFLUENT FORCE MAIN PLAN AND PROFILE
B-C1.4	DRAINFIELD SECTION AND DETAILS
B-C1.5	TRENCH DETAILS
B-C2.0	WWTF SITE UTILITY PLAN
B-C3.0	WWTF SITE GRADING PLAN
B-C4.0	CIVIL DETAILS
B-C4.1	CIVIL DETAILS
B-C5.0	EQUALIZATION TANK PLAN AND SECTION
B-GI-201	WWTF - GENERAL CODE INFORMATION
B-GI-301	WWTF - AIR BARRIER
B-A-101	WWTF - OVERALL FLOOR PLAN - LEVEL 1
B-A-102	WWTF - OVERALL FLOOR PLAN - LEVEL 2
B-A-151	WWTF - REFERENCE REFLECTED CEILING PLAN
B-A-161	WWTF - REFERENCE ROOF PLAN
B-A-201	WWTF - EXTERIOR ELEVATIONS
B-A-251	WWTF - INTERIOR ELEVATIONS
B-A-301	WWTF - BUILDING SECTIONS
B-A-302	WWTF - VERTICAL CIRCULATION
B-A-501	WWTF - WALL, FLOOR, AND ROOF TYPES
B-A-511	WWTF - FOUNDATION DETAILS
B-A-521	WWTF - EXTERIOR WALL DETAILS
B-A-541	WWTF - DOOR AND FRAME DETAILS
B-A-561	WWTF - CEILING DETAILS
B-A-571	WWTF - ROOF DETAILS
B-A-585	WWTF - MISCELLANEOUS DETAILS
B-A-601	WWTF - DOOR AND FRAME SCHEDULE
B-A-621	WWTF - FINISH SCHEDULE
B-S1.0	GENERAL STRUCTURAL NOTES AND ABBREVIATIONS
B-S1.1	GENERAL STRUCTURAL NOTES
B-S2.0	STRUCTURAL DETAILS
B-S3.0	BUILDING FLOOR & FOUNDATION PLAN AND SECTIONS
B-S3.1	BUILDING ROOF & FRAMING PLANS, SECTIONS, AND DETAILS
B-S3.2	BUILDING SECTIONS AND ELEVATIONS
B-S3.3	BUILDING SECTIONS AND DETAILS
B-S4.0	TANK PLAN, SECTIONS, AND DETAILS
B-S4.1	MBR TANK COVER PLANS AND DETAILS
B-S5.0	EQUIPMENT FOUNDATIONS
B-M1.0	MECH PIPING SYMBOLS, NOTES, AND ABBREVIATIONS
B-M2.0	INFLUENT PUMP STATION PLAN AND SECTION
B-M2.1	MBR FEED PUMP STATION PLAN AND SECTION
B-M2.2	INFLUENT SCREEN PLAN AND SECTION
B-M3.0	OPERATIONS BUILDING INTERNAL PIPING PLAN
B-M3.1	OPERATIONS BUILDING INTERNAL PIPING SECTIONS AND DETAILS
B-M3.2	MBR SYSTEM TANK PLAN
B-M3.3	MBR TANK INTERNAL PIPING SECTION
B-M3.4	MBR SYSTEM PIPING SECTIONS
B-M3.5	MECHANICAL PIPING DETAILS
B-M3.6	PLANT EFFLUENT STORAGE TANK DETAILS
B-M4.0	HVAC FLOOR PLANS AND SECTION
B-M4.1	OPERATIONS BUILDING PLUMBING PLAN
B-M4.2	OPERATIONS BUILDING PLUMBING SECTIONS & DETAILS
B-M5.0	MBR ODOR CONTROL TREATMENT SYSTEM PLAN AND SECTION
B-M5.1	MBR ODOR CONTROL PIPING DETAILS
B-E1.0	ELECTRICAL SYMBOLS, NOTES, AND ABBREVIATIONS
B-E2.0	ELECTRICAL DETAILS
B-E3.0	ELECTRICAL SITE PLAN
B-E4.0	BUILDING ELECTRICAL PLAN
B-E4.1	MECH / STORAGE ELECTRICAL PLAN
B-E5.0	MBR TANK ELECTRICAL PLAN
B-E5.1	INFLUENT PUMP STATION ELECTRICAL PLAN
B-E5.2	MBR FEED PUMP STATION ELECTRICAL PLAN
B-E6.0	ELECTRICAL ONE-LINE DIAGRAM
B-E6.1	ELECTRICAL PANELBOARD AND LIGHTING SCHEDULES
B-E6.2	ELECTRICAL CONDUIT AND CABLE SCHEDULE
B-E7.0	MOTOR CONTROL ELEMENTARIES 1
B-E7.1	MOTOR CONTROL ELEMENTARIES 2
B-E7.2	MOTOR CONTROL ELEMENTARIES 3
B-E7.3	MOTOR CONTROL ELEMENTARIES 4
B-E7.4	MOTOR CONTROL ELEMENTARIES 5
B-I1.0	SCADA BLOCK DIAGRAM

Call 811 two business days before you dig

BID SET

CAD NO.

NO.	REVISIONS	INT.	APP.	DATE

ACTION	BY	DATE
DESIGNED	BB	04/11/25
DRAWN	KT	04/11/25
CHECKED (FIELD)		
CHECKED (HDQTS.)		

BRIAN E BUNKER
STATE OF WASHINGTON
46055
REGISTERED PROFESSIONAL ENGINEER
4/11/2025

REGISTERED STAMP

WASHINGTON STATE PARKS AND RECREATION COMMISSION

NISQUALLY STATE PARK

PHASE 3A MAINTENANCE BUILDING AND WWTF

DRAWING INDEX AND DESIGN TEAM

B-G2.0

SCALE
NO SCALE

PARKS FILE#

U:\PSO\Projects\Clients\4763-RW Droi\216-4763-010 Nisqually ParkWWOptions\99Svcs\CADD\DWG\PS180620A-G2.0.dwg
Apr-11-25 9:03am

LEGEND

DESCRIPTION	EXISTING	NEW
FENCE		
EDGE OF PAVEMENT		
EDGE OF GRAVEL		
EDGE OF CONCRETE		
WATER LINE		W — X" WATER (HDPE)
SANITARY SEWER		SS — X" SS (PVC)
SANITARY SEWER FORCE MAIN		SSFM — X" SSFM (HDPE)
PERMEATE		PE — X" PE (HDPE)
ODOROUS AIR		OA — X" OA (PVC)
NON POTABLE WATER		NPW — X" NPW (HDPE)
DRAIN		D — X" D (PVC)
INDEX CONTOUR	220	150
INTERMEDIATE CONTOUR		146
CLEARING LIMITS		
CAP		
SS CLEAN OUT (CO)		CO
SS MANHOLE		
GATE VALVE		
HOSE BIBB		
BOLLARD		
DIRECTIONAL FLOW & SLOPE		
SILT FENCE		
TREE PROTECTION		
TREE REMOVAL		
AC PAVEMENT		
GRAVEL		
CONCRETE		

GENERAL NOTES

1. CONSTRUCTION ON HOLIDAY WEEKENDS MUST BE AUTHORIZED BY THE OWNER IN ADVANCE.
2. PRIOR TO START OF CONSTRUCTION, CONTRACTOR SHALL LOCATE AND IDENTIFY ALL EXISTING UTILITIES. NOTIFY ENGINEER OF ANY CONFLICTS.

HDPE PIPE GENERAL NOTES

DR =		7.3	9	11
BEND RATIO		20	20	25
PIPE SIZE (INCHES)	OUTSIDE DIAMETER (INCHES)	MINIMUM BEND RADIUS (FEET)		
1 1/4	1.660	3.0	3.0	3.5
1 1/2	1.900	3.0	3.0	4.0
2	2.375	4.0	4.0	4.9
3	3.500	6.0	6.0	7.3
4	4.500	8.0	8.0	9.4

ABBREVIATIONS

ACP	ASPHALT CONCRETE PAVING
@	AT
BLDG	BUILDING
BP	BEGINNING POINT
BV	BUTTERFLY VALVE
CI	CAST IRON
CIP	CAST IRON PIPE
CLR	CLEAR
CO	CLEANOUT
CONC	CONCRETE
CONST	CONSTRUCTION
CSBC	CRUSHED SURFACING BASE COURSE
CSTC	CRUSHED SURFACING TOP COURSE
CV	CHECK VALVE
CY	CUBIC YARD
DBL	DOUBLE
DIA	DIAMETER
DIM	DIMENSION
DI, DIP	DUCTILE IRON PIPE
DN	DOWN
DOH	DEPARTMENT OF HEALTH
DS	DOWNSPOUT
EA	EACH
EFF	EFFLUENT
EL	ELEVATION
EP	END POINT
EQ	EQUAL
EX,EXIST	EXISTING
FD	FLOOR DRAIN
FIN FL	FINISH FLOOR
FL	FLANGE
FM	FORCE MAIN
FT	FOOT, FEET
FTG	FOOTING
G	GAS
GAL	GALLON
GPD	GALLONS PER DAY
GPM	GALLONS PER MINUTE
GALV	GALVANIZED
GV	GATE VALVE
HT	HEIGHT
HDPE	HIGH DENSITY POLYETHYLENE
HP	HORSE POWER
IE	INVERT ELEVATION
LBS	POUNDS
LF	LINEAL FEET
MAX	MAXIMUM
MBR	MEMBRANE BIOREACTOR
MFR	MANUFACTURER
MIN	MINIMUM
MISC	MISCELLANEOUS
MJ	MECHANICAL JOINT
N.I.C.	NOT IN CONTRACT
NO.	NUMBER
NOM	NOMINAL
NPW	NON-POTABLE WATER
NTS	NOT TO SCALE
O.C.	ON CENTER
PARKS	WASHINGTON STATE PARKS AND RECREATION COMMISSION
PE	PERMEATE
PP	PRIMARY POWER
PUD	PUBLIC UTILITY DISTRICT
PSI	POUNDS PER SQUARE INCH
PVC	POLYVINYL CHLORIDE PIPE
REINF	REINFORCING
REQ	REQUIRED
SCH	SCHEDULE
SHT	SHEET
SIM	SIMILAR
SP	SINGLE PHASE POWER
SPEC	SPECIFICATIONS
SS	SANITARY SEWER
SSFM	SANITARY SEWER FORCE MAIN
STA	STATION
TBM	TEMPORARY BENCH MARK
TESC	TEMPORARY EROSION AND SEDIMENTATION CONTROL
TYP	TYPICAL
U/G	UNDERGROUND
UNO	UNLESS NOTED OTHERWISE
VERT	VERTICAL
W	WATER
WM	WATER METER
W/	WITH
W/O	WITHOUT

BID SET

Call 811 two business days before you dig

CAD NO.

	DATE	APP.	INT.	REVISIONS	NO.

ACTION	BY	DATE
DESIGNED	KT	04/11/25
DRAWN	KT	04/11/25
CHECKED (FIELD)		
CHECKED (HDQTS.)		

BRIAN E BUNKER STATE OF WASHINGTON 46055 REGISTERED PROFESSIONAL ENGINEER 4/11/2025

REGISTERED STAMP

WASHINGTON STATE PARKS AND RECREATION COMMISSION

NISQUALLY STATE PARK

PHASE 3A MAINTENANCE BUILDING AND WWTF

LEGEND, ABBREVIATIONS, AND NOTES

B-G3.0

SCALE

NO SCALE

PARKS FILE#

U:\PSO\Projects\Clients\4763-RW Droll\216-4763-010 Nisqually PorkWWOptions\99Svcs\CADD\DWG\PS18062A-G3.0.dwg
Apr-11-25 9:06am

DESIGN DATA SUMMARY FOR NISQUALLY MBR SYSTEM

DESCRIPTION	VALUE
DESIGN FLOWS (GPD)	
DOH INFLUENT DESIGN FLOW (PEAK DAY)	11,400
PLANT PEAK DAY CAPACITY (FOR FUTURE FLOWS)	22,700
DESIGN LOADINGS (LBS/DAY)	
PEAK MONTH	
BOD	50
TSS	43
TKN	14
PEAK DAY	
BOD	100
TSS	86
TKN	28
EFFLUENT REQUIREMENTS (mg/L)	
BOD	30
TSS	30
TKN	10
SAMPLING MANHOLE	
INSIDE DIAMETER (FT)	4
INFLUENT SAMPLER	REFRIGERATED COMPOSITE WITH HEATED ENCLOSURE
INFLUENT FLOW METER	
TYPE	MAGNETIC FLOW METER
INFLUENT PUMP STATION	
NUMBER	2
MOTOR SIZE, HP	3
CAPACITY, GPM	120
TDH, FT	29
WETWELL, INSIDE DIAMETER (FT)	5
EQUALIZATION TANK	
EQUALIZATION VOLUME	
LENGTH, FT	40
WIDTH, FT	16
DEPTH, FT	9
MAXIMUM SIDE WATER DEPTH, FT	8.0
NORMAL FLUID CAPACITY, GALS	30,000
AIR MIXING COMPRESSOR, HP	0.5
FINE SCREENS	
NUMBER	2
TYPE	DRUM
SCREEN OPENING	2 MM
CAPACITY, GPM	140
MOTOR SIZE, HP	0.33
CONVEYOR/WASHER/COMPACTOR	
NUMBER	1
MOTOR SIZE, HP	0.33 / 1.5
MBR FEED PUMP STATION	
NUMBER	2
MOTOR SIZE, HP	2
CAPACITY, GPM	25
TDH, FT	30
WETWELL, INSIDE DIAMETER (FT)	5

DESIGN DATA SUMMARY FOR NISQUALLY MBR SYSTEM

DESCRIPTION	VALUE
MBR SYSTEM - KUBOTA	
INFLUENT FLOW METER	
TYPE	MAGNETIC FLOW METER
DIAMETER, INCHES	2
PRE-ANOXIC BASIN	
LENGTH, FT	10
WIDTH, FT	11
DEPTH, FT	12
SIDE WATER DEPTH, FT	8.5
VOLUME, GAL	6,200
MIXER	
TYPE	SUBMERSIBLE PROPELLER
NUMBER	1
MOTOR SIZE, HP	2.14
CAPACITY, GALLONS	7,800
PRE-AERATION BASIN	
LENGTH, FT	16.5
WIDTH, FT	11
DEPTH, FT	12
SIDE WATER DEPTH, FT	9.5
VOLUME, GAL	12,400
MIXER	
TYPE	SUBMERSIBLE PROPELLER
NUMBER	1
MOTOR SIZE, HP	2.14
CAPACITY, GALLONS	12,900
AERATION SYSTEM	
DIFFUSER TYPE	FINE BUBBLE DISK GRID
NUMBER OF DIFFUSERS	14
CAPACITY, SCFM	78
ALPHA	0.62
BETA	0.95
SOTE, %	19
AERATION TANK BLOWER	
NUMBER	1
CAPACITY, SCFM	88
MOTOR SIZE, HP	8.7
OPERATING PRESSURE, FT	19.42
POST-ANOXIC BASIN	
LENGTH, FT	9.0
WIDTH, FT	11
DEPTH, FT	12
SIDE WATER DEPTH, FT	VARIES
VOLUME, GAL	6,300
MIXER	
TYPE	SUBMERSIBLE PROPELLER
NUMBER	1
MOTOR SIZE, HP	2.14
CAPACITY, GALLONS	6,700

DESIGN DATA SUMMARY FOR NISQUALLY MBR SYSTEM

DESCRIPTION	VALUE
MBR SYSTEM - KUBOTA (CONTINUED)	
MEMBRANE BIOREACTOR BASIN	
NUMBER	1
LENGTH, FT	9.5
WIDTH, FT	11
DEPTH, FT	12
SIDE WATER DEPTH, FT	8.5
VOLUME, GAL	7,700
MEMBRANES	
MEMBRANE MODULES, NUMBER	2
AREA PER MEMBRANE MODULE, FT2	1075
TOTAL MEMBRANE AREA, FT2	2150
MEMBRANE NOMINAL PORE SIZE	0.45 µm
DESIGN MLSS, mg/L	8000
FLUX RATES, GAL/FT2 AT 15oC	
DESIGN	14.7
PEAK	29.4-36.7
HYDRAULIC CAPACITY, GFD	7-20
TMP, PSIG	
DESIGN	0.3
MAXIMUM	3
MEMBRANE BIOREACTOR BASIN AERATION SYSTEM	
NUMBER OF BLOWERS	2
MOTOR SIZE, HP	8.7
CAPACITY, SCFM	88
OPERATING PRESSURE, PSI	6.8
MASS AIR FLOW METER, SCFM/IN	200/4
PRE-ANOXIC BASIN RECYCLE PUMPS	
NUMBER	2
MOTOR SIZE, HP	2.3
CAPACITY, GPM	130
TDH, FT	15
EFFLUENT (PERMEATE PUMPS)	
NUMBER (OPERATING/STANDBY)	1/1
MOTOR SIZE, HP	0.75
CAPACITY, GPM	35
TDH, FT	41
CHEMICAL FEED PUMPS, SUBMERSIBLE	
NUMBER (OPERATING/STANDBY)	1/0
MOTOR SIZE, HP	0.33
CAPACITY, GPM	31
TDH, FT	10
CHEMICAL FEED PUMPS, ALKALINITY	
NUMBER (OPERATING/STANDBY)	1/0
MOTOR SIZE, HP	<0.33
CAPACITY, GPH @ 100 PSI	1.0
CHEMICAL FEED PUMPS, CARBON ADDITION	
NUMBER (OPERATING/STANDBY)	1/0
MOTOR SIZE, HP	<0.33
CAPACITY, GPH @ 30 PSI	3.3
UV DISINFECTION SYSTEM	
TYPE:	AQUIONICS INLINE
NUMBER OF CONTACT VESSELS	2
INSIDE DIAMETER, INCHES	2
HYDRAULIC CAPACITY, GPD	50,000
POWER CONSUMPTION, PEAK, KW	0.5
UV DOSE, MJ/SQ CM	35
DESIGN UVT PERCENT	70

DESIGN DATA SUMMARY FOR NISQUALLY MBR SYSTEM

DESCRIPTION	VALUE
EFFLUENT FLOW SAMPLER	
TYPE:	REFRIGERATED COMPOSITE, INDOOR
EFFLUENT FLOW METER	
TYPE:	MAGNETIC FLOW METER
DIAMETER, INCHES	3
WAS SLUDGE STORAGE AND PUMPING SYSTEM	
SLUDGE HOLDING BASIN	
LENGTH, FT	9
WIDTH, FT	11
SIDE WATER DEPTH, FT	8.5
VOLUME, GAL	6,300
WAS AERATION SYSTEM	
COARSE BUBBLE DIFFUSER	
NUMBER	3
CAPACITY, SCFM	15
WAS BLOWER	
CAPACITY, SCFM	30
MOTOR SIZE, HP	2.4
SLUDGE HOLDING BASIN PUMP	
NUMBER (OPERATING/STANDBY)	1
MOTOR SIZE, HP	0.75
CAPACITY, GPM	100
TDH, FT	20
MISCELLANEOUS PUMPING SYSTEMS	
NON-POTABLE WATER PUMPS	
NUMBER (OPERATING/STANDBY)	1/1
MOTOR SIZE, HP	2
CAPACITY, GPM	~30
TDH, FT	~115
PLANT DRAIN PUMP	
NUMBER (OPERATING/STANDBY)	1/0
MOTOR SIZE, HP	0.75
CAPACITY, GPM	100
TDH, FT	20
ODOR CONTROL SYSTEM	
NUMBER	1
FAN MOTOR SIZE, HP	2
MEDIA UNIT DIA., FT	4
MEDIA UNIT HEIGHT, FT	6
CARBON MEDIA DEPTH, FT	2
PERMANGANATE MEDIA DEPTH, FT	1
STANDBY GENERATOR	
NUMBER	1
TYPE	DIESEL
CAPACITY, KW	125
STORAGE TANK	
GALLONS	4,000

*ALL VALUES SUBJECT TO CHANGE BASED ON ACTUAL SITE CHARACTERISTICS AND DETAILS.

BID SET

Call 811 two business days before you dig

CAD NO.

	DATE
	APP.
	INT.
	REVISIONS
	NO.

ACTION	BY	DATE
DESIGNED	TS	04/11/25
DRAWN	KT	04/11/25
CHECKED (FIELD)		
CHECKED (HDQTS.)		

BRIAN E BUNKER, STATE OF WASHINGTON, 46055, REGISTERED PROFESSIONAL ENGINEER
4/11/2025

REGISTERED STAMP

WASHINGTON STATE PARKS AND RECREATION COMMISSION

NISQUALLY STATE PARK

PHASE 3A MAINTENANCE BUILDING AND WWTF

MBR SYSTEM DESIGN DATA

B-P1.0

SCALE

NO SCALE

PARKS FILE#

U:\PSO\Projects\Clients\4763-RW Droll\216-4763-010 Nisqually PortKWOptions\99Svcs\CADD\DWG\PS18062A-P1.0.dwg
Apr-11-25 10:07am

INSTRUMENT IDENTIFICATION LETTERS (NOTE 2)

	FIRST LETTER		SUCCEEDING LETTERS		
	MEASURED OR PROCESS VARIABLE	MODIFIER	READOUT OR PASSIVE FUNCTION	OUTPUT FUNCTION	MODIFIER
A	ANALYSIS		ALARM		
B	BURNER, COMBUSTION		USER'S CHOICE	USER'S CHOICE	USER'S CHOICE
C	USER'S CHOICE			CONTROL	
D	DENSITY	DIFFERENTIAL			
E	VOLTAGE		SENSOR (PRIMARY ELEMENT)		
F	FLOW RATE	RATIO (FRACTION)			
G	USER'S CHOICE		GLASS, VIEWING DEVICE		
H	HAND				HIGH
I	CURRENT (ELECTRICAL)		INDICATE		
J	POWER	SCAN			
K	TIME, TIME SCHEDULE	TIME RATE OF CHANGE		CONTROL STATION	
L	LEVEL		LIGHT		LOW
M	MOISTURE	MOMENTARY			MIDDLE, INTERMEDIATE
N	USER'S CHOICE		USER'S CHOICE	USER'S CHOICE	USER'S CHOICE
O	USER'S CHOICE		ORIFICE,RESTRICTION		
P	PRESSURE, VACUUM		POINT (TEST) CONNECTION		
Q	QUANTITY	INTEGRATE, TOTALIZE			
R	RADIATION		RECORD		
S	SPEED, FREQUENCY	SAFETY		SWITCH	
T	TEMPERATURE			TRANSMIT	
U	MULTIVARIABLE		MULTIFUNCTION	MULTIFUNCTION	MULTIFUNCTION
V	VIBRATION, MECHANICAL ANALYSIS			VALVE, DAMPER, OR LOUVER	
W	WEIGHT, FORCE		WELL		
X	UNCLASSIFIED	X AXIS	UNCLASSIFIED	UNCLASSIFIED	UNCLASSIFIED
Y	EVENT, STATE, PRESENCE	Y AXIS		RELAY, COMPUTE, CONVERT	
Z	POSITION, DIMENSION	Z AXIS		DRIVER, ACTUATOR, UNCLASSIFIED FINAL CONTROL ELEMENT	

LINE SYMBOLS

LINE	DESCRIPTION
	MAIN PROCESS FLOW (WITH TYPICAL DIRECTION OF FLOW SHOWN)
	MAIN (EXISTING)
	SUBSIDIARY PROCESS FLOW
	SUBSIDIARY (EXISTING)
	INSTRUMENT SUPPLY, PROCESS TAPS, NON PROCESS FLOW
// //	PNEUMATIC SIGNAL (ANALOG)
	ELECTRIC SIGNAL (ANALOG)
	PNEUMATIC SIGNAL (DISCRETE)
	ELECTRIC SIGNAL (DISCRETE)
	CAPILLARY TUBE OR FILLED SYSTEM
	ELECTROMAGNETIC OR SONIC SIGNAL (GUIDED)
	ELECTROMAGNETIC OR SONIC SIGNAL (UNGUIDED)
	SOFTWARE OR DATA LINK
	MECHANICAL LINK
	HYDRAULIC
120V	ELECTRIC POWER SUPPLY 120VAC, 60HZ U.N.O.
XX	SERVICE AIR OR INSTRUMENT AIR SUPPLY
	STRUCTURES AND SPECIAL EQUIPMENT

MECHANICAL — OR — CONNECTED — ELECTRICAL

NOT CONNECTED

VALVES

- GATE VALVE
- 3 WAY VALVE
- BALL VALVE
- 3 WAY BALL VALVE
- GLOBE VALVE
- 3 WAY GLOBE VALVE
- PLUG VALVE
- ECCENTRIC PLUG VALVE
- NEEDLE VALVE
- BUTTERFLY VALVE
- DIAPHRAM VALVE
- SWING CHECK VALVE
- WAFER CHECK VALVE
- BALL CHECK VALVE
- PINCH VALVE
- REGULATED SIDE
- SELF ACTUATED REGULATING VALVE
- SELF ACTUATED REGULATING VALVE W/ EXTERNAL TAP
- COMBINATION AIR/VAC RELEASE VALVE
- PRESSURE SAFETY VALVE
- MUD VALVE
- AIR RELEASE VALVE
- VACUUM RELEASE VALVE

VALVE IDENTIFIERS

B
C
A

A = TAG
B = SIZE
C = NORMAL STATE

VALVE OPERATORS

- HAND
- M — MOTORIZED
- CYLINDER OPERATOR
- S — SOLENOID
- DIAPHRAGM

INSTRUMENT & MECHANICAL EQUIPMENT SYMBOLS & MISCELLANEOUS

- CENTRIFUGAL PUMP
- SUBMERSIBLE PUMP - RAIL MOUNTED
- VERTICAL PUMP
- METERING PUMP
- PROGRESSING CAVITY PUMP
- SUBMERSIBLE PUMP
- ROTARY PUMP
- BLOWER
- CALIBRATION CHAMBER
- SILENCER
- M — MOTOR
- M — SUBMERSIBLE MIXER
- INTAKE SCREEN/FILTER
- EXPANSION JOINT, FLEXIBLE SPOOL
- HOSE
- IXXX (E) (N) — INTERFACE CONTROL (E) = EXISTING (N) = NEW
- MIXER
- NO NC — SLUICE GATE
- NO NC — FLAP GATE
- NO NC — SLIDE GATE
- NO NC — STOP GATE
- INJECTOR
- F — FILTER OR SEPARATOR
- T — DRIP TRAP
- HOSE BIBB CONNECTION
- DIAPHRAGM SEAL
- RUPTURE DISK, PRESSURE
- RUPTURE DISK, VACUUM
- IN-LINE PRESSURE SENSOR
- PUMP SEAL OR VALVE WATER SUPPLY, PLANT WATER
- FLANGE
- UNION
- Y STRAINER
- FLOW STRAIGHTENING VANE
- HOSE CONNECTION
- CAP OR PLUG
- BLIND FLANGE
- P — PURGE
- DRAIN
- THERMOWELL
- AIR COMPRESSOR
- PULSATION DAMPENER
- REDUCER
- STATIC MIXER
- HEAT TRACE
- I 3 — INTERLOCK. NUMBER IS THE NOTE IDENTIFIER (NOTE 2)
- X | DWG # — DESCRIPTION — CONNECTION TO PROCESS WITHIN PROJECT
- SYSTEM CONNECTION OUTSIDE PROJECT

ABBREVIATIONS

AAS - ALKALINITY ADJUSTMENT SOLUTION
AC - ACID
AL - ALUM
AMP - AMPERE
AS - AIR SUPPLY
BW - BELT WASH WATER
BWR - BELT WASH WATER RECYCLE
CD - CONDENSATE
CDR - CONDENSER RETURN
CDS - CONDENSER SUPPLY
CHF - CHEMICAL FEED
CLS - CHLORINE SOLUTION
CP - CONTROL PANEL
CWR - CHILLED WATER RETURN
CWS - CHILLED WATER SUPPLY
D - DRAIN
DE - DISINFECTED EFFLUENT
DIS - DISTILLED WATER
DS - DIGESTED SLUDGE
ECR - EFFLUENT COOLING RETURN
ECS - EFFLUENT COOLING SUPPLY
ED - EQUIPMENT DRAIN
EE - ENGINE EXHAUST
EFF - EFFLUENT
ETM - ELAPSED TIME METER
ES - ELECTRICAL SUPPLY
F - FIRE SPRINKLER
FC - FAIL CLOSED
FD - FLOOR DRAIN
FE - FINAL EFFLUENT
FIL - FILTRATE
FM - FORCEMAIN
FO - FAIL OPEN
GR - GRIT
GRC - GAS RECIRCULATION
HOA - HAND-OFF-AUTO
HOH - HIGH PRESSURE HYDRAULIC OIL
HOL - LOW PRESSURE HYDRAULIC OIL
HOR - HAND-OFF-REMOTE
HRR - HEAT RESERVOIR RETURN
HRS - HEAT RESERVOIR SUPPLY
HWS - DOMESTIC HOT WATER SUPPLY
IA - INSTRUMENT AIR
I/O - ON/OFF
JOR - JOG-OFF-REMOTE
LCP - LOCAL CONTROL PANEL
LOR - LOCAL-OFF-REMOTE
LSR - LOWER-STOP-RAISE
ML - MIXED LIQUOR
MUD - MUD VALVE
MV - MOTORIZED VALVE
NaOH - SODIUM HYDROXIDE
NC - NORMALLY CLOSED
NG - NATURAL GAS
NO - NORMALLY OPEN
OA - ODOROUS AIR
OF - OVERFLOW
OSC - OPEN-STOP-CLOSE
PA - PROCESS AIR
PD - PUMPED DRAINAGE
PE - PLANT EFFLUENT
PLC - PROGRAMMABLE LOGIC CONTROLLER
POL - POLYMER SOLUTION
PRS - PROCESS SAMPLING
PSV - PRESSURE SAFETY VALVE
PV - PNEUMATIC VALVE
PVC - POLYVINYL CHLORIDE
RP - RAW POLYMER
RS - RAW SEWAGE
SA - SERVICE AIR
SC - SCUM
SD - STORM DRAIN
SE - SECONDARY EFFLUENT
SG - SLUICE GATE
SLG - SLIDE GATE
SN - SUPERNANANT
SRS - SCREENED/DEGRITTED RAW SEWAGE
SS - SANITARY SEWER
STG - STOP GATE
SV - SOLENOID VALVE
TD - TANK DRAIN
THS - THICKENED SLUDGE
TO - THICKENER OVERFLOW
TURB - TURBIDITY
UNO - UNLESS NOTED OTHERWISE
V - VENT
VAC - VACUUM
VFD - VARIABLE FREQUENCY DRIVE
W1 - POTABLE
W2 - NON-POTABLE
WAS - WASTE ACTIVATED SLUDGE
WML - WASTE MIXED LIQUOR

GENERAL INSTRUMENT OR FUNCTION SYMBOLS (NOTE 2)

	FIELD MOUNTED	PRIMARY LOCATION, ACCESSIBLE TO OPERATOR	AUXILIARY LOCATION, ACCESSIBLE TO OPERATOR	NORMALLY INACCESSIBLE OR BEHIND THE PANEL
DISCRETE INSTRUMENTS				
SHARED DISPLAY, SHARED CONTROL				
COMPUTER FUNCTION				
PROGRAMMABLE LOGIC CONTROL				

A B C D E

A INSTRUMENT IDENTIFICATION LETTERS (SEE TABLE ABOVE)
B LOOP NUMBER
C MODIFIER
D SEQUENCE
E USER

FLOW ELEMENTS

- ORIFICE PLATE
- SINGLE PORT PITOT TUBE OR PITOT-VENTURI TUBE
- AVERAGING PITOT TUBE
- FLUME
- WEIR
- TURBINE OR PROPELLER-TYPE PRIMARY ELEMENT
- ROTAMETER
- POSITIVE DISPLACEMENT TYPE FLOW TOTALIZING INDICATOR
- VORTEX SENSOR
- TARGET TYPE SENSOR
- FLOW NOZZLE
- M — MAGNETIC FLOWMETER
- SONIC FLOWMETER
- D — DENSITY METER
- VENTURI

PIPE SIZE, SERVICE, AND MATERIAL IDENTIFICATION

(FOR REFERENCE ONLY. SEE SITE AND MECHANICAL DRAWINGS)

NOMINAL PIPE DIAMETER IN INCHES — 4" RS

FLOW STREAM ABBREVIATION

NOTES:

1. THIS IS A GENERALIZED LEGEND SHEET. THIS PROJECT MAY NOT USE ALL INFORMATION SHOWN.
2. INSTRUMENT SYMBOLS AND IDENTIFICATION ARE BASED ON INSTRUMENT SOCIETY OF AMERICA STANDARD ANSI/ISA 5.1-1984 (R 1992)

Call 811 two business days before you dig

SHEET 147 OF 226

BID SET

CAD NO.

	DATE
	APP.
	INT.
	REVISIONS
	NO.

ACTION	BY	DATE
DESIGNED	KT	04/11/25
DRAWN	KT	04/11/25
CHECKED (FIELD)		
CHECKED (HDQTS.)		

BRIAN E BUNKER — STATE OF WASHINGTON — 46055 — REGISTERED PROFESSIONAL ENGINEER — 4/11/2025

REGISTERED STAMP

WASHINGTON STATE PARKS AND RECREATION COMMISSION

NISQUALLY STATE PARK

PHASE 3A MAINTENANCE BUILDING AND WWTF

P&ID DIAGRAM LEGEND & ABBREVIATIONS

B-P1.1

SCALE

NO SCALE

PARKS FILE#

U:\ PSO\Projects\Clients\4763-RW Droll\216-4763-010 Nisqually&PorkWWOptions\99Svcs\CADD\DWG\PS18062A-P1.1.dwg
Apr-11-25 10:05am

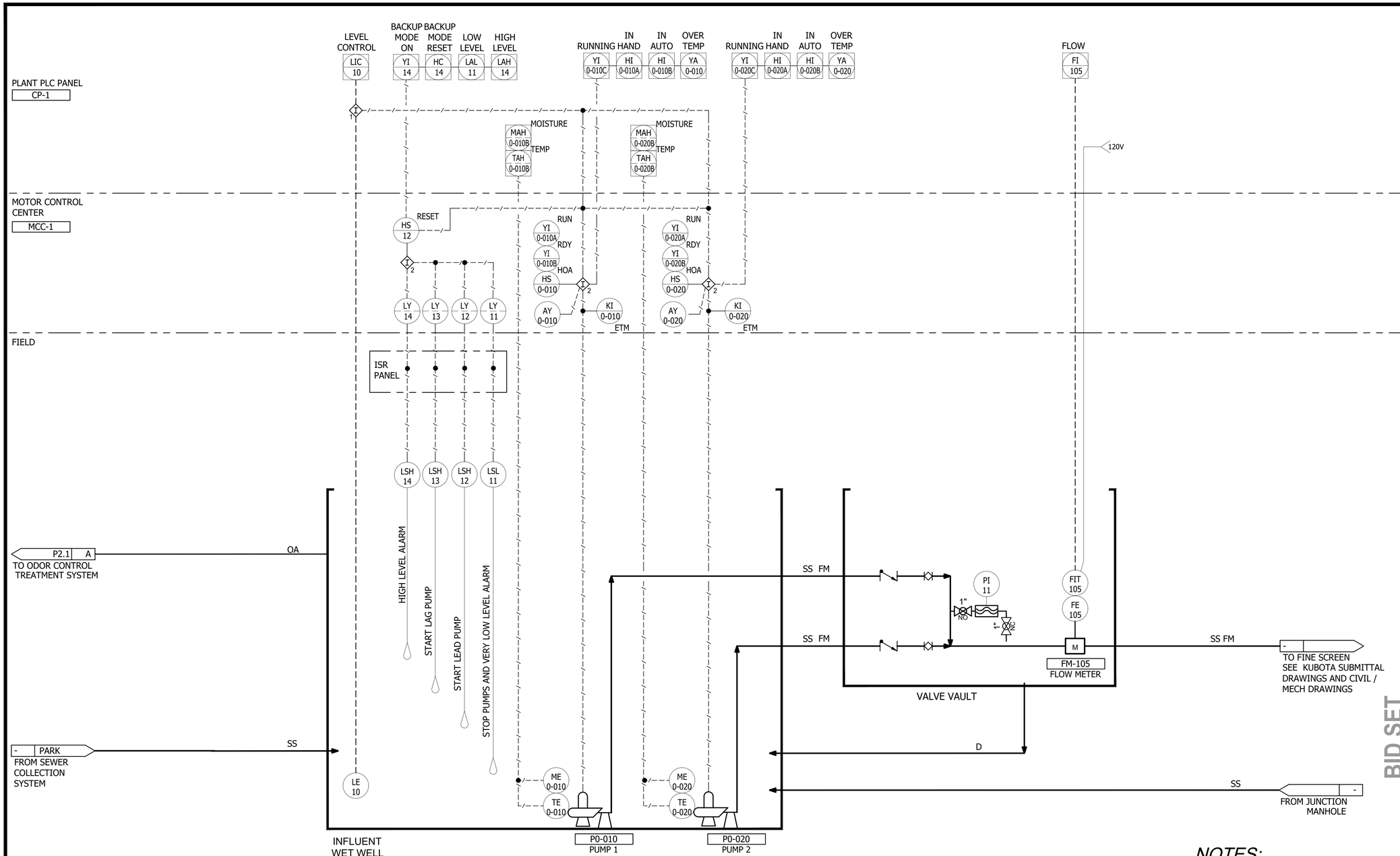

NOTES:

1. SEE M2.0 FOR WET WELL OPERATING LEVELS.
2. BACK UP PUMPING: WHEN LSH-14 IS TRIPPED, BACKUP MODE IS ENABLED. PUMPS TO OPERATE ON A AUTO ALTERNATOR IN A LEAD/ LAG/ STANDBY FASHION. SEE E7.1 FOR CONTROL CIRCUIT.

Call 811 two business days before you dig

BID SET

SHEET 148 OF 226

CAD NO.

	DATE	APP.	INT.	REVISIONS	NO.

ACTION	BY	DATE
DESIGNED	MC	04/11/25
DRAWN	KT	04/11/25
CHECKED (FIELD)		
CHECKED (HDQTS.)		

MARVIN C. CASANOVA STATE OF WASHINGTON 48989 REGISTERED PROFESSIONAL ENGINEER 4/11/2025

BRIAN E BUNKER STATE OF WASHINGTON 46055 REGISTERED PROFESSIONAL ENGINEER 4/11/2025

REGISTERED STAMP

WASHINGTON STATE PARKS AND RECREATION COMMISSION

NISQUALLY STATE PARK

PHASE 3A MAINTENANCE BUILDING AND WWTF

INFLUENT PUMP STATION P&ID

B-P2.0

SCALE

NO SCALE

PARKS FILE#

U:\PSO\Projects\Clients\4763-RW Droit\216-4763-010 Nisqually-PortWWOptions\99Svcs\CADD\DWG\PS18062A-P2.0.dwg
Apr-11-25 10:04am

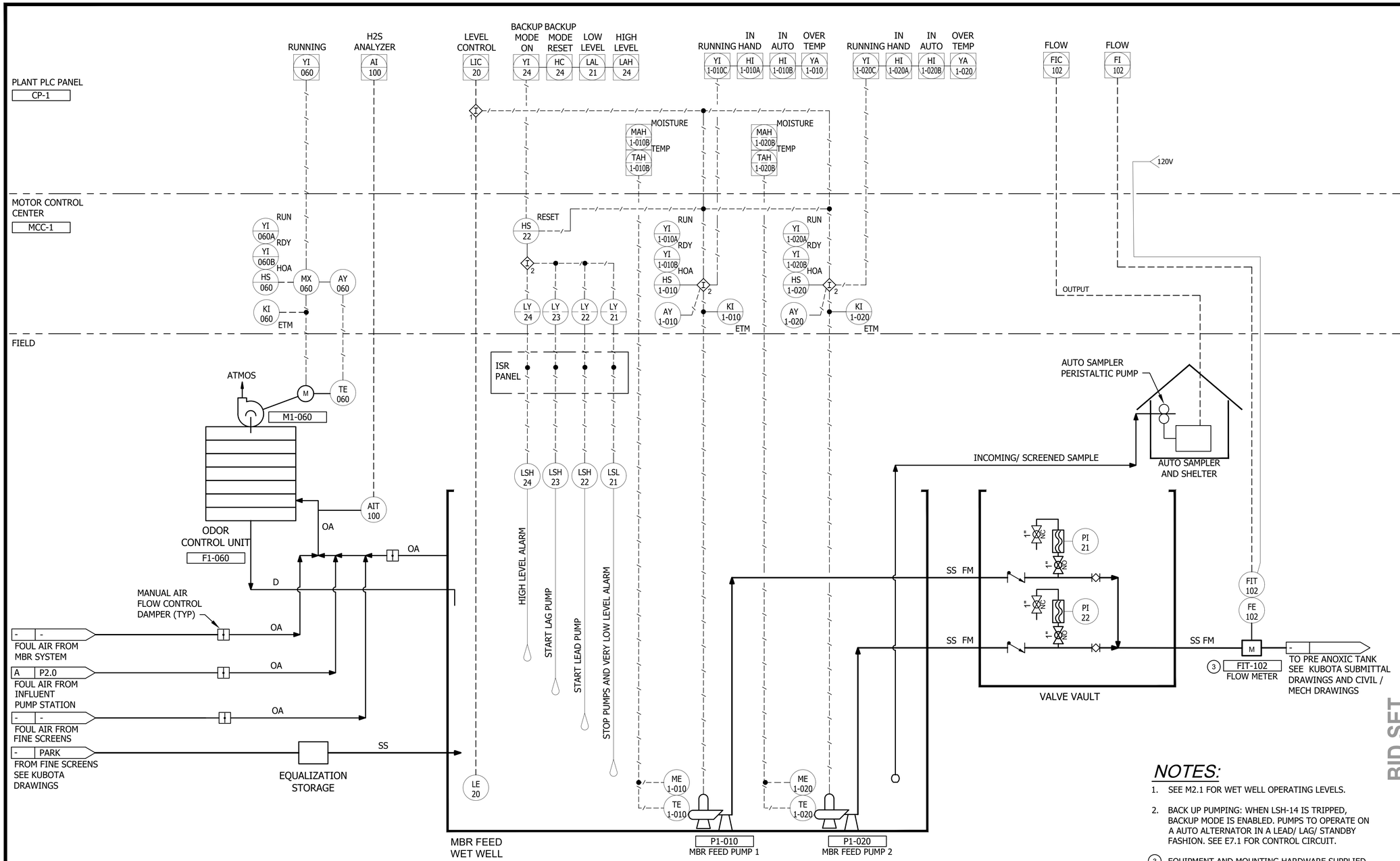

NOTES:

1. SEE M2.1 FOR WET WELL OPERATING LEVELS.
2. BACK UP PUMPING: WHEN LSH-14 IS TRIPPED, BACKUP MODE IS ENABLED. PUMPS TO OPERATE ON A AUTO ALTERNATOR IN A LEAD/ LAG/ STANDBY FASHION. SEE E7.1 FOR CONTROL CIRCUIT.
3. EQUIPMENT AND MOUNTING HARDWARE SUPPLIED BY MANUFACTURER KUBOTA AND INSTALLED BY CONTRACTOR.

BID SET

Call 811 two business days before you dig

SHEET 149 OF 226

CAD NO.

NO.	REVISIONS	INT.	APP.	DATE

ACTION	BY	DATE
DESIGNED	MC	04/11/25
DRAWN	KT	04/11/25
CHECKED (FIELD)		
CHECKED (HDQTS.)		

MARVIN C. CASANOVA, STATE OF WASHINGTON, 48989, REGISTERED PROFESSIONAL ENGINEER — 4/11/2025

BRIAN E. BUNKER, STATE OF WASHINGTON, 46055, REGISTERED PROFESSIONAL ENGINEER — 4/11/2025

REGISTERED STAMP

WASHINGTON STATE PARKS AND RECREATION COMMISSION

NISQUALLY STATE PARK

PHASE 3A MAINTENANCE BUILDING AND WWTF

MBR FEED PUMP STATION P&ID

B-P2.1

SCALE

NO SCALE

PARKS FILE#

U:\PSO\Projects\Clients\4763-RW Droll\216-4763-010 NisquallyParkWWOptions\99Svcs\CADD\DWG\PS18062A-P2.1.dwg
Apr-11-25 10:15am

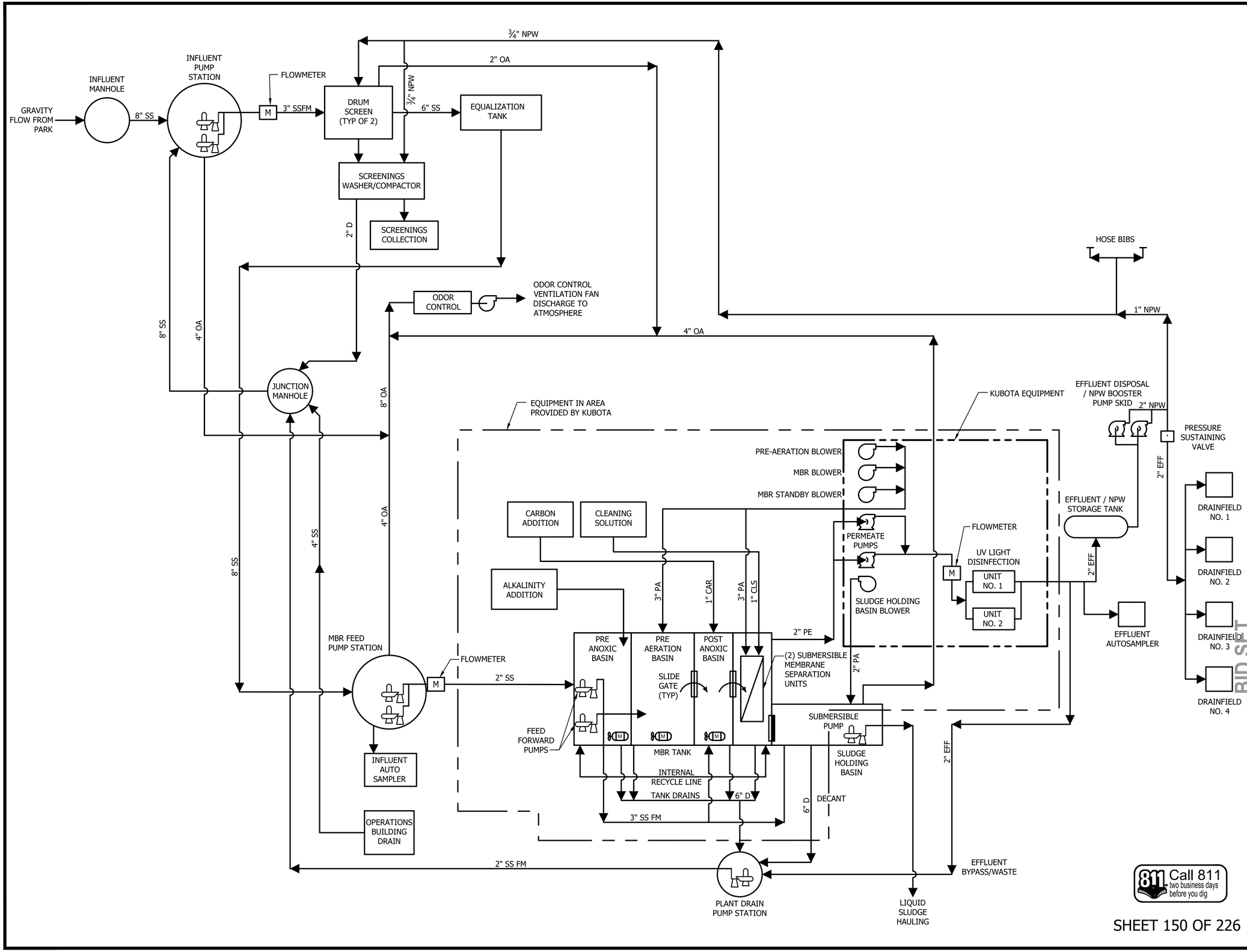

SHEET 150 OF 226

CAD NO.

NO.	REVISIONS	INT.	APP.	DATE

ACTION	BY	DATE
DESIGNED	TS	04/11/25
DRAWN	KT	04/11/25
CHECKED (FIELD)		
CHECKED (HDQTS.)		

BRIAN E BUNKER
STATE OF WASHINGTON
46055
REGISTERED PROFESSIONAL ENGINEER
4/11/2025

REGISTERED STAMP

WASHINGTON STATE PARKS AND RECREATION COMMISSION

NISQUALLY STATE PARK

PHASE 3A MAINTENANCE BUILDING AND WWTF

MBR SYSTEM PROCESS FLOW DIAGRAM

B-P3.0

SCALE

NO SCALE

PARKS FILE#

U:\PSO\Projects\Clients\4763-RW Droll\216-4763-010 NisquallyParkWWOptions\99Svcs\CADD\DWG\PS18062A-P3.0.dwg
Apr-11-25 10:14am

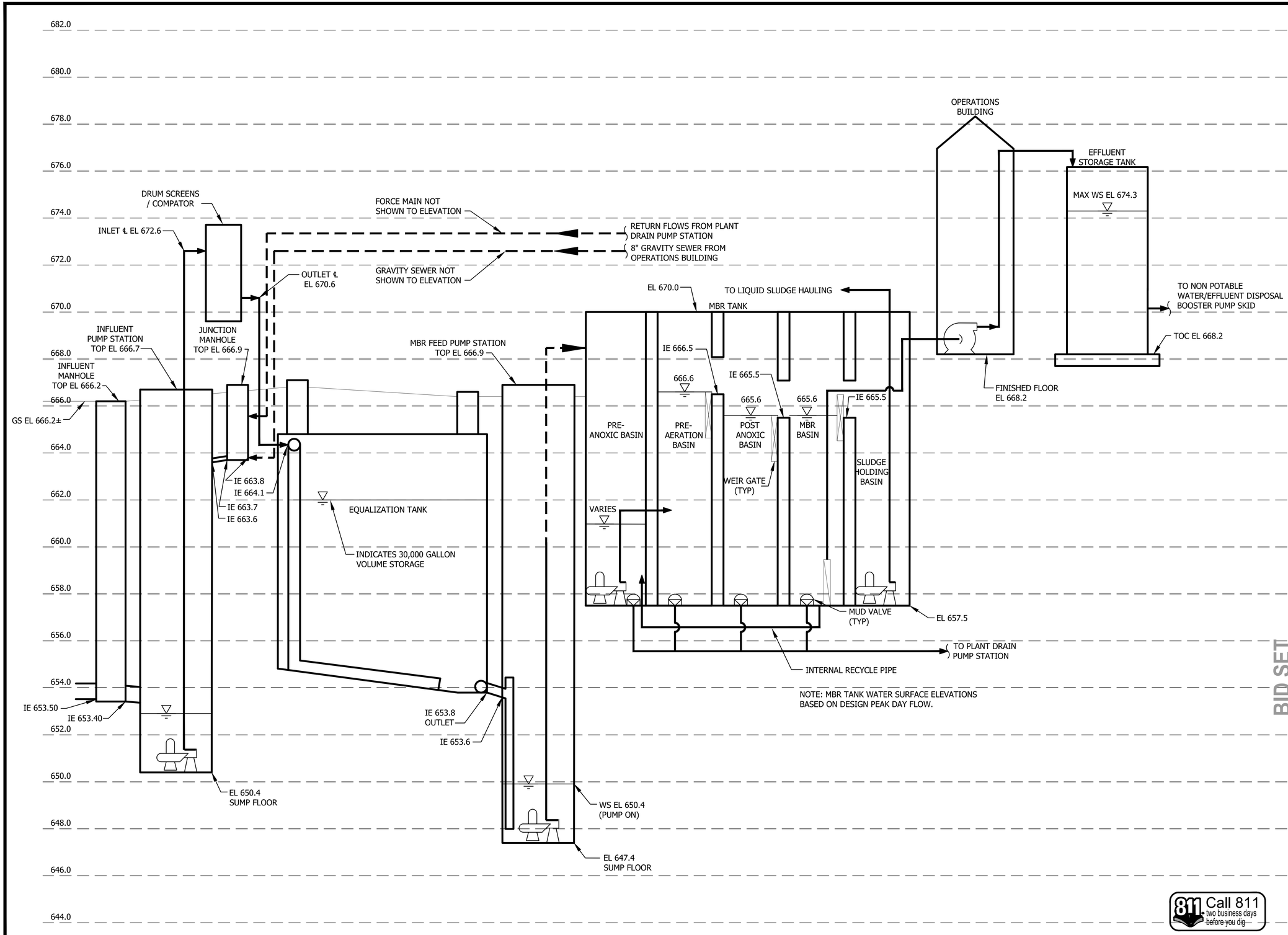

SHEET 151 OF 226

BID SET

CAD NO.

NO.	REVISIONS	INT.	APP.	DATE

ACTION	BY	DATE
DESIGNED	TS	04/11/25
DRAWN	KT	04/11/25
CHECKED (FIELD)		
CHECKED (HDQTS.)		

BRIAN E BUNKER STATE OF WASHINGTON 46055 REGISTERED PROFESSIONAL ENGINEER
4/11/2025

REGISTERED STAMP

WASHINGTON STATE PARKS AND RECREATION COMMISSION

NISQUALLY STATE PARK

PHASE 3A MAINTENANCE BUILDING AND WWTF

MBR SYSTEM HYDRAULIC PROFILE

B-P4.0

SCALE

NO SCALE

PARKS FILE#

U:\PSO\Projects\Clients\4763-RW Droll\216-4763-010 Nisqually PorkWWOptions\99Svcs\CADD\DWG\PS180620-P4.0.dwg
Apr-11-25 10:13am

TREE REMOVAL LIST					
TREE	SPECIES	DBH	TREE	SPECIES	DBH
1	DOUGLAS FIR	12 IN	43	DOUGLAS FIR	14 IN
2	DOUGLAS FIR	12 IN	44	DOUGLAS FIR	12 IN
3	DOUGLAS FIR	12 IN	45	DOUGLAS FIR	10 IN
4	DOUGLAS FIR	10 IN	46	DOUGLAS FIR	8 IN
5	BIG LEAF MAPLE	10 IN	47	DOUGLAS FIR	10 IN
6	DOUGLAS FIR	8 IN	48	DOUGLAS FIR	12 IN
7	DOUGLAS FIR	8 IN	49	DOUGLAS FIR	8 IN
8	DOUGLAS FIR	10 IN	50	DOUGLAS FIR	8 IN
9	DOUGLAS FIR	10 IN	51	DOUGLAS FIR	14 IN
10	DOUGLAS FIR	20 IN	52	DOUGLAS FIR	14 IN
11	BIG LEAF MAPLE	12 IN	53	DOUGLAS FIR	10 IN
12	BIG LEAF MAPLE	12 IN	54	DOUGLAS FIR	8 IN
13	DOUGLAS FIR	8 IN	55	DOUGLAS FIR	8 IN
14	DOUGLAS FIR	8 IN	56	DOUGLAS FIR	10 IN
15	DOUGLAS FIR	12 IN	57	DOUGLAS FIR	10 IN
16	DOUGLAS FIR	10 IN	58	DOUGLAS FIR	10 IN
17	DOUGLAS FIR	8 IN	59	DOUGLAS FIR	8 IN
18	DOUGLAS FIR	14 IN	60	DOUGLAS FIR	8 IN
19	COTTON-WOOD	8 IN	61	DOUGLAS FIR	10 IN
20	COTTON-WOOD	8 IN	62	DOUGLAS FIR	12 IN
21	COTTON-WOOD	6 IN	63	DOUGLAS FIR	8 IN
22	DOUGLAS FIR	12 IN	64	DOUGLAS FIR	12 IN
23	DOUGLAS FIR	8 IN	65	DOUGLAS FIR	8 IN
24	DOUGLAS FIR	12 IN	66	DOUGLAS FIR	10 IN
25	DOUGLAS FIR	12 IN	67	DOUGLAS FIR	10 IN
26	DOUGLAS FIR	12 IN	68	DOUGLAS FIR	6 IN
27	DOUGLAS FIR	12 IN			
28	DOUGLAS FIR	10 IN			
29	DOUGLAS FIR	8 IN			
30	DOUGLAS FIR	14 IN			
31	DOUGLAS FIR	6 IN			
32	DOUGLAS FIR	12 IN			
33	DOUGLAS FIR	12 IN			
34	DOUGLAS FIR	12 IN			
35	DOUGLAS FIR	6 IN			
36	DOUGLAS FIR	12 IN			
37	DOUGLAS FIR	8 IN			
38	DOUGLAS FIR	10 IN			
39	DOUGLAS FIR	12 IN			
40	DOUGLAS FIR	8 IN			
41	DOUGLAS FIR	10 IN			
42	DOUGLAS FIR	12 IN			

DBH (DIAMETER BREAST HEIGHT)

DRAINFIELD SITE PLAN

SCALE 1" = 40'

SHEET 152 OF 226

BID SET

CAD NO.

NO.	REVISIONS	INT.	APP.	DATE

ACTION	BY	DATE
DESIGNED	YM	04/11/25
DRAWN	YM	04/11/25
CHECKED (FIELD)		
CHECKED (HDQTS.)		

BRIAN E BUNKER, STATE OF WASHINGTON, 46055, REGISTERED PROFESSIONAL ENGINEER

4/11/2025

REGISTERED STAMP

WASHINGTON STATE PARKS AND RECREATION COMMISSION

NISQUALLY STATE PARK

PHASE 3A MAINTENANCE BUILDING AND WWTF

OVERAL SITE PLAN

B-C1.0

SCALE 0 40' 80'

PARKS FILE#

U:\PSO\Projects\Clients\4763-RW Draft\216-4763-010 Nisqually Park WW Options\99Svcs\CADD\DWG\PS180620A-C1.0-1.4.dwg
Apr-11-25 8:26am

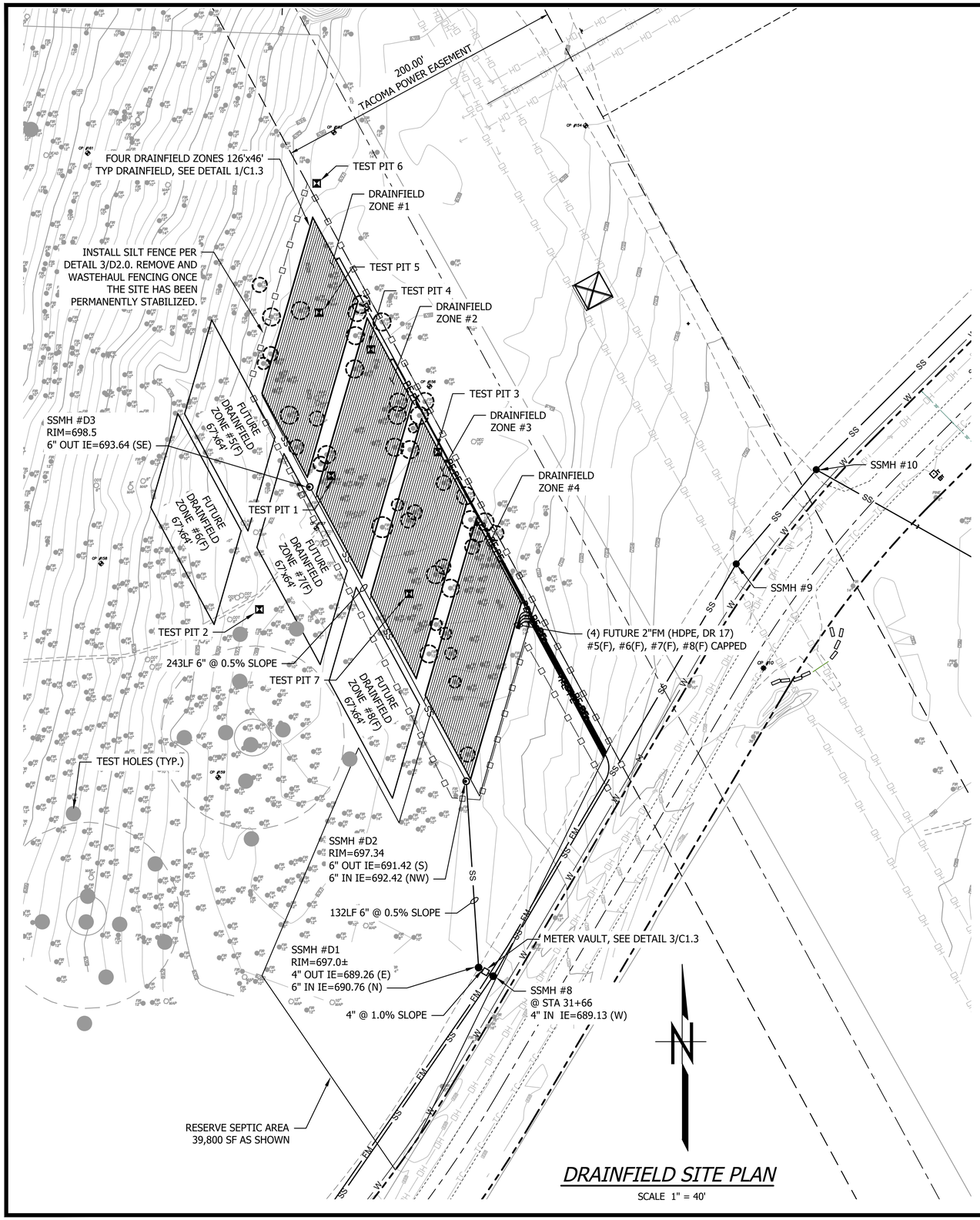

DRAINFIELD SITE PLAN

SCALE 1" = 40'

SUBSURFACE DRIP SYSTEM REQUIREMENTS		
DESIGN FLOW	11,400	gal/day
SOIL TYPE	3	
EMITTER SPACING	12.0	inches
DRIPLINE SPACING	18.0	inches
AREA per EMITTER	1.5	sq ft
MAX DAILY EMITTER DISCHARGE RATE	0.80	gpd/emitter
REQUIRED NO. of EMITTERS	14,250	ea
REQUIRED DRIPFIELD AREA	21,375	sq ft

DRAINFIELD PARAMETERS - G-WFFPC-16-4-12-PRO Tubing		
Number of Zones	4	Zones
Lateral Length	117.0	Feet
Zone width	46.0	Feet
No. of Lateral	31.0	Feet
Lineal Ft Dripline/zone	3,627.0	Feet
Total Lineal Ft Dripline	14,508.0	Feet
No. of emitters/lateral	31.00	gpd/emitter
emitters/zone	3,627.00	emitters
Cell Area	5,382.00	sq ft
Total Emitters	14,508.00	emitters
Total Area	21,528.00	sq ft

DOSING CRITERIA		
Cycles per day	12	
Dispersal Flow	54.4	gpm
Run Time per Zone	4.37	Minutes
"On" Time per cycle	17.48	Minutes
Total "On" Time per day	209.76	Minutes
Maximum Dispersed	11,410.94	gpd

BID SET

Call 811 two business days before you dig

SHEET 153 OF 226

CAD NO.

NO.	REVISIONS	INT.	APP.	DATE

ACTION	BY	DATE
DESIGNED	YM	04/11/25
DRAWN	YM	04/11/25
CHECKED (FIELD)		
CHECKED (HDQTS.)		

BRIAN E BUNKER, STATE OF WASHINGTON, 46055, REGISTERED PROFESSIONAL ENGINEER
4/11/2025

REGISTERED STAMP

WASHINGTON STATE PARKS AND RECREATION COMMISSION

NISQUALLY STATE PARK

PHASE 3A MAINTENANCE BUILDING AND WWTF

DRAINFIELD SITE PLAN

B-C1.1

SCALE 40' 0 80'

PARKS FILE#

U:\PSO\Projects\Clients\4763-RW Draft\216-4763-010 Nisqually Park WW Options\99Svcs\CADD\DWG\PS180620A-C1.0-1.4.dwg
Apr-11-25 8:26am

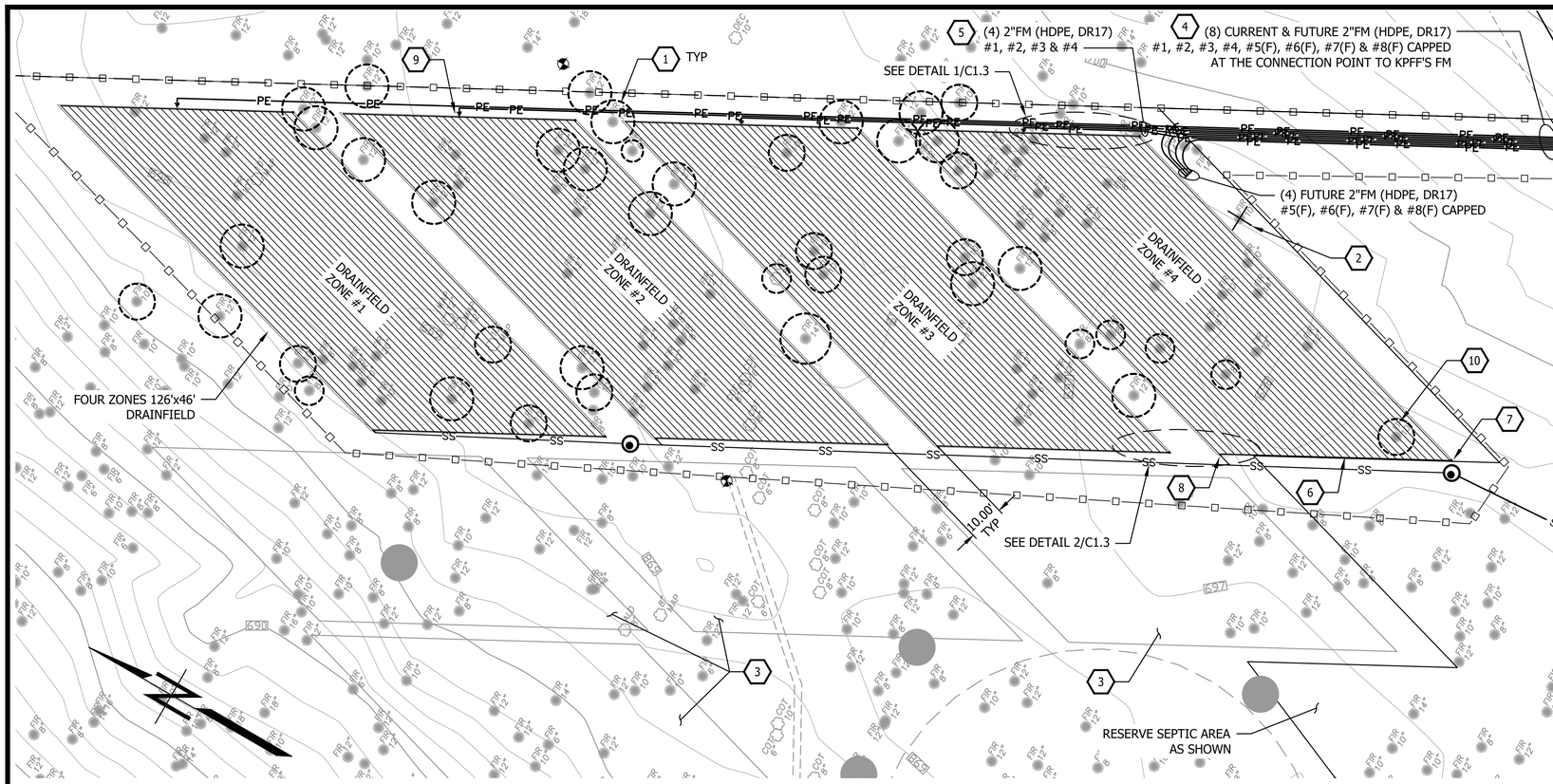

PLAN

SCALE 1" = 20'

GENERAL NOTES:

1. WHERE TRENCHING FOR UTILITIES OUTSIDE OF ASPHALT IS REQUIRED WITHIN THE DRIPLINES OF TREES BEING RETAINED, TUNNEL UNDER OR AROUND ROOTS 2"+ BY DRILLING, AUGER BORING OR DIGGING BY HAND. ONLY CUT MAIN LATERAL ROOTS OR TAP ROOTS WHERE NECESSARY, AVOID HITTING AND TEARING ROOTS WITH HEAVY EQUIPMENT, AND PILE EXCAVATED SOIL AWAY FROM TREE TRUNKS.

KEY NOTES:

1. PROTECT EXISTING TREE, SEE DETAIL 2/D2.0
2. REMOVE EX TREE, SEE SHEET C1.0 FOR TREE REMOVAL LIST
3. FUTURE EFFLUENT DISPOSAL FIELD, FOUR ZONES 67'x64' (TYP)
4. NEW (8) 2" FM FROM WWTP (BY OTHERS)
5. PROVIDE (4) 2" EFLLUENT FM HDPE DR17
6. PROVIDE 2" FM MANIFOLD SCH 80 PVC PIPE TYP 8 PLACES, SEE DETAIL 1/C1.4
7. PROVIDE 1" AIR VENT/VACUUM RELIEF VALVE MODEL APVBK100M OR APPROVED EQUAL IN STANDARD 6½" DIA VALVE BOX LEVEL AT EXISTING GROUND SURFACE. TYP 2 EA ZONE, SEE DETAIL 1/C1.4
8. PROVIDE 2" IN-LINE BALL VALVE TYP 4 PLACES, THROTTLE TO ACHIEVE 25% RETURN, SEE DETAIL 1/C1.4
9. PROVIDE PRV MODEL # PMR50-HF. TYP 4 PLACES W/ (2) 2"x1¼" REDUCERS
10. LATERALS WITHIN DRAINFIELD TO MEANDER AROUND TREE TRUNKS MARKED AS EXISTING TO REMAIN

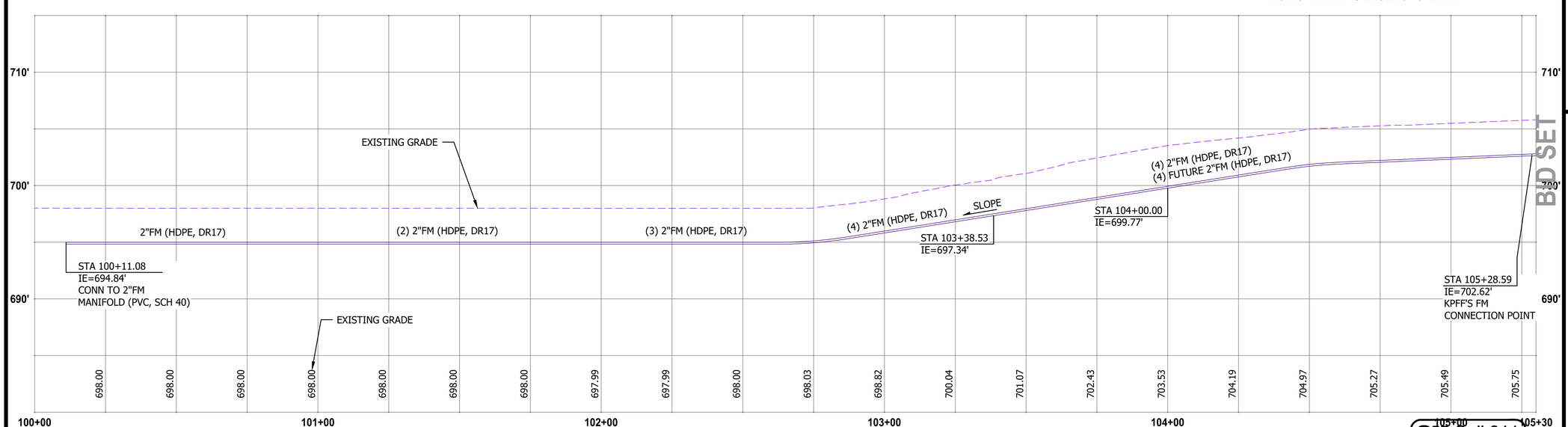

PROFILE

SCALE 1" = 5'

Call 811 two business days before you dig

SHEET 154 OF 226

CAD NO.		
	DATE	
	APP.	
	INT.	
	REVISIONS	
	NO.	

ACTION	BY	DATE
DESIGNED	YM	04/11/25
DRAWN	YM	04/11/25
CHECKED (FIELD)		
CHECKED (HDQTS.)		

BRIAN E BUNKER
STATE OF WASHINGTON
46055
REGISTERED PROFESSIONAL ENGINEER
4/11/2025

REGISTERED STAMP

WASHINGTON STATE PARKS AND RECREATION COMMISSION

NISQUALLY STATE PARK

PHASE 3A MAINTENANCE BUILDING AND WWTF

EFFLUENT FORCE MAIN PLAN AND PROFILE

B-C1.2

SCALE 0 20' 40'

PARKS FILE#

U:\PSO\Projects\Clients\4763-RW Droll\216-4763-010 NisqueallyParkWWOptions\995vcs\CADD\DWG\PS18062A-C1.0-1.4.dwg
Apr-11-25 8:27am

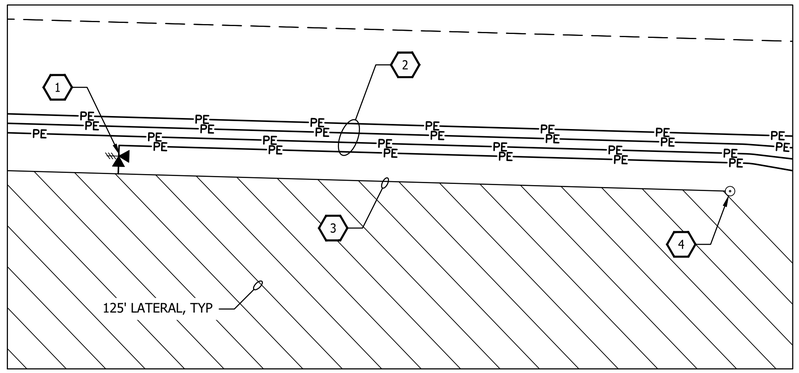

TYP INLET MANIFOLD DETAIL

1 / B-C1.2

SCALE : 1"=4'

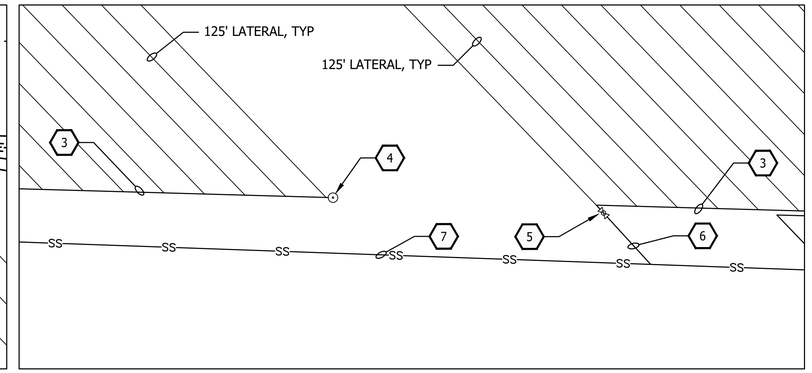

TYP RETURN MANIFOLD DETAIL

2 / B-C1.2

SCALE : 1"=4'

GENERAL NOTES:

WHERE TRENCHING FOR UTILITIES OUTSIDE OF ASPHALT IS REQUIRED WITHIN THE DRIPLINES OF TREES BEING RETAINED, TUNNEL UNDER OR AROUND ROOTS 2"+ BY DRILLING, AUGER BORING OR DIGGING BY HAND. ONLY CUT MAIN LATERAL ROOTS OR TAP ROOTS WHERE NECESSARY, AVOID HITTING AND TEARING ROOTS WITH HEAVY EQUIPMENT, AND PILE EXCAVATED SOIL AWAY FROM TREE TRUNKS.

KEY NOTES:

1. PRV MODEL # PMR50-HF. TYP 4 PLACES W/ (2) 2"x1¼" REDUCERS
2. PROVIDE (4) 2" EFLLUENT FM HDPE DR17
3. PROVIDE 2" FM MANIFOLD SCH 80 PVC PIPE TYP 8 PLACES, SEE DETAIL 1/C1.4
4. PROVIDE 1" AIR VENT/VACUUM RELIEF VALVE MODEL APVBK100M OR APPROVED EQUAL IN STANDARD 6½" DIA VALVE BOX LEVEL AT EXISTING GROUND SURFACE. TYP 2 EA ZONE, SEE DETAIL 1/C1.4
5. PROVIDE 2" IN-LINE BALL VALVE TYP 4 PLACES, THROTTLE TO ACHIEVE 25% RETURN
6. PROVIDE 4" RETURN LINE SDR 35 PVC
7. PROVIDE 6" SS LINE (PVC)

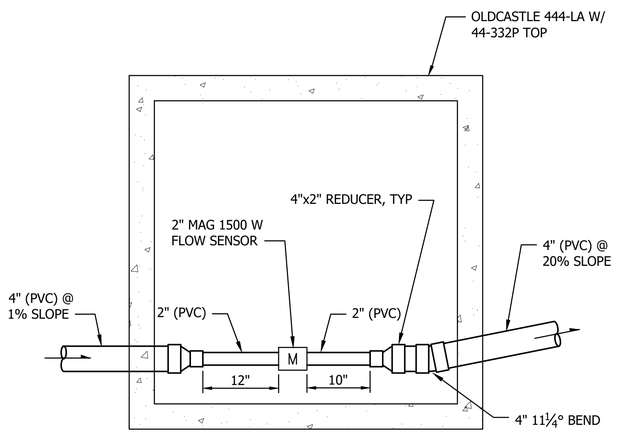

FLOW METER VAULT SECTION

3 / B-C1.1

SCALE : 1"=4'

VALVE VAULT NOTES:

1. 2" MAG 5100 W FLOW SENSOR, PROVIDE MIN 10" UPSTREAM & 6" DOWNSTREAM CLEARANCE.

Call 811 two business days before you dig

SHEET 155 OF 226

BID SET

CAD NO.

NO.	REVISIONS	INT.	APP.	DATE

ACTION	BY	DATE
DESIGNED	YM	04/11/25
DRAWN	YM	04/11/25
CHECKED (FIELD)		
CHECKED (HDQTS.)		

BRIAN E BUNKER
STATE OF WASHINGTON
46055
REGISTERED PROFESSIONAL ENGINEER

4/11/2025

REGISTERED STAMP

WASHINGTON STATE PARKS AND RECREATION COMMISSION

NISQUALLY STATE PARK

PHASE 3A MAINTENANCE BUILDING AND WWTF

EFFLUENT FORCE MAIN PLAN AND PROFILE

B-C1.3

SCALE 0 20' 40'

PARKS FILE#

U:\PSO\Projects\Clients\4763-RW Droll\216-4763-010 Nisqually\ParkWWOptions\99Svcs\CADD\DWG\PS18062A-C1.0-1.4.dwg
Apr-11-25 8:28am

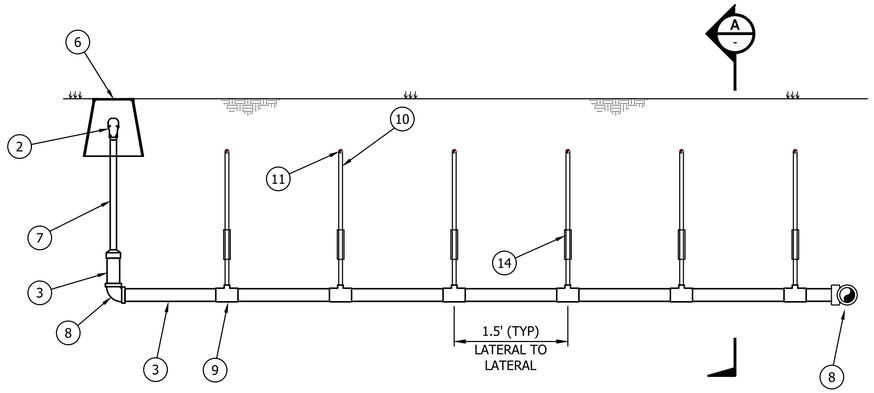

TYP LATERAL TO MANIFOLD CONECTION DETAIL

1 / B-C1.1

SCALE : NTS

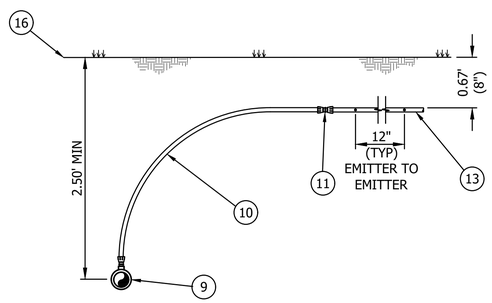

TYP LATERAL END FEED SECTION

A / -

SCALE : NTS

KEY NOTES:

1. PROVIDE GEOFLOW WASTEFLOW PC OR APPROVED EQUAL, EFFLUENT SUBSURFACE DRIP SYSTEM DRAINFIELD ZONE (TYP) - TRENCHING SHALL BE DONE WITH AIRSPADE OR HAND TOOLS TO PROTECT CRITICAL ROOT ZONES.
2. PROVIDE 1" AIR VENT/VACUUM RELIEF VALVE MODEL APVBK100M OR APPROVED EQUAL (TYP).
3. PROVIDE 2" MANIFOLD SCHEDULE 80 PVC (TYP).
4. NOT USED.
5. PROVIDE 6" RETURN LINE SDR 35 PVC.
6. PROVIDE LOCKABLE 6-1/2" DIA. VALVE BOX LEVEL AT EXISTING GROUND SURFACE.
7. PROVIDE 1" SCHEDULE 80 PVC.
8. PROVIDE 2" 90°-BEND SCHEDULE 80 PVC.
9. PROVIDE 2"x¾"x2" TEE SCHEDULE 80 PVC, GEOFLOW LOCKSLIP ADAPTER (LTSLIP-600) OR APPROVED EQUAL.
10. PROVIDE BLANK GEOFLOW WASTEFLOW DRIPLINE.
11. PROVIDE GEOFLOW LOCKSLIP COUPLING (LTC-600) OR APPROVED EQUAL.
12. PROVIDE NON-TRAFFIC RATED CLEANOUT, SEE DETAIL 2/DT4, 4" WYE SDR 35 PVC.
13. PROVIDE GEOFLOW WASTEFLOW PC 12"/0.90 GPH MODEL WFPC16-4-12 OR APPROVED EQUAL.
14. 50 PSI CHECK VALVE ON SUPPLY MANIFOLD.
15. 2" BRASS GATE VALVE ON EACH RETURN MANIFOLD.
16. POST GRUBBING GRADE.

NOTES:

1. RESTORATION SHALL BE IN ACCORDANCE WITH LOCAL REGULATORY REQUIREMENTS.
2. TRENCH BACKFILL SHALL BE COMPACTED AND TESTED IN ACCORDANCE WITH SPECIFICATION 310000.
3. PIPE SIZE PER PLAN.

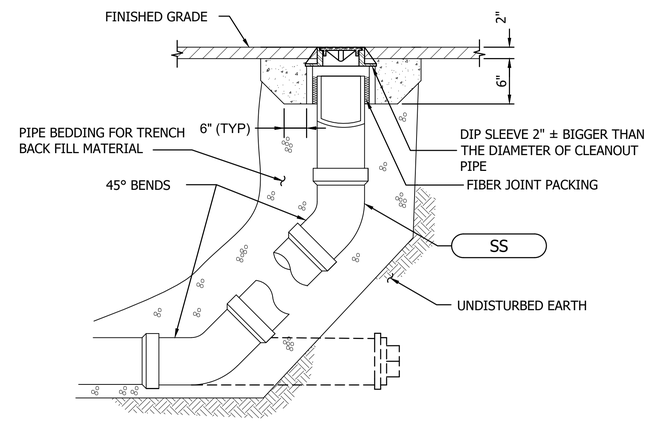

RISER

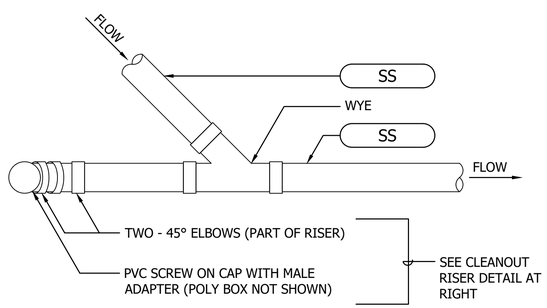

PLAN VIEW

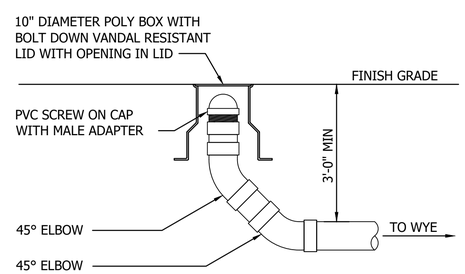

RISER

NON-TRAFFIC RATED CLEANOUT DETAIL

2 / B-C1.1

SCALE : NTS

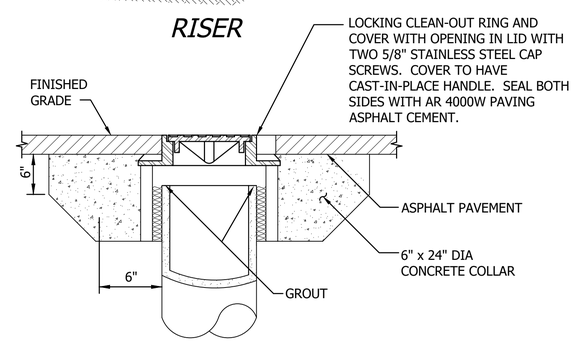

TRAFFIC RATED CLEANOUT DETAIL

2 / B-C1.1

SCALE : NTS

Call 811 two business days before you dig

SHEET 156 OF 226

BID SET

CAD NO.

	DATE	APP.	INT.	REVISIONS	NO.

ACTION	BY	DATE
DESIGNED	YM	04/11/25
DRAWN	YM	04/11/25
CHECKED (FIELD)		
CHECKED (HDQTS.)		

BRIAN E BUNKER
STATE OF WASHINGTON
46055
REGISTERED
PROFESSIONAL ENGINEER
4/11/2025

REGISTERED STAMP

WASHINGTON STATE PARKS AND RECREATION COMMISSION

NISQUALLY STATE PARK

PHASE 3A MAINTENANCE BUILDING AND WWTF

DRAINFIELD SECTION AND DETAILS

B-C1.4

SCALE

PARKS FILE#

U:\PSO\Projects\Clients\4763-RW Droll\216-4763-010 Nisqually\ParkWWOptions\99Sirca\CADD\DWG\PS18062A-C1.0-1.4.dwg
Apr-11-25 8:29am

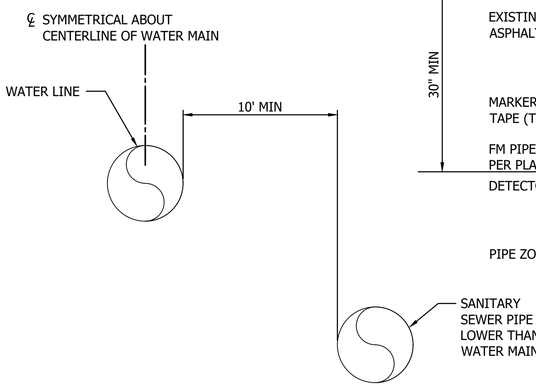

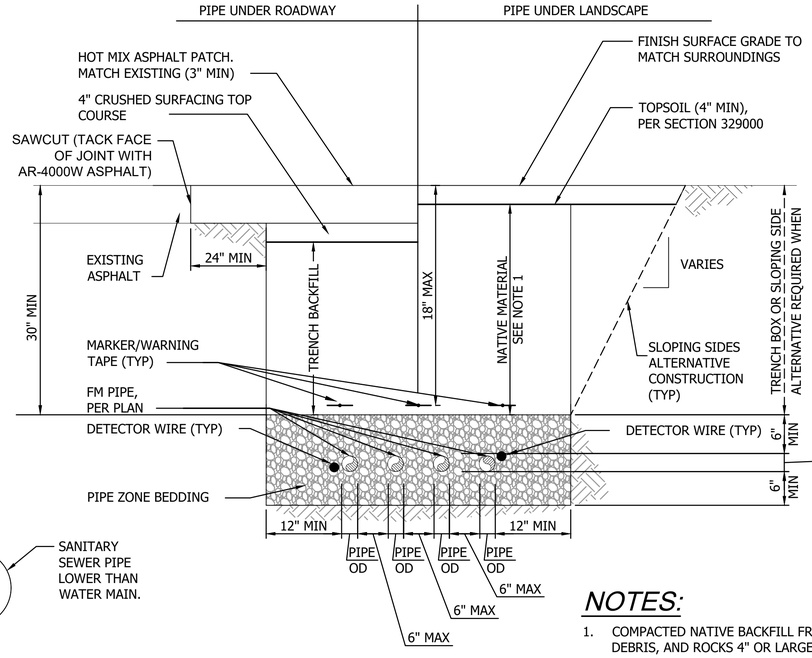

WATER LINE AND SANITARY SEWER SEPARATION PARALLEL CONSTRUCTION DETAIL

1 SCALE : NONE

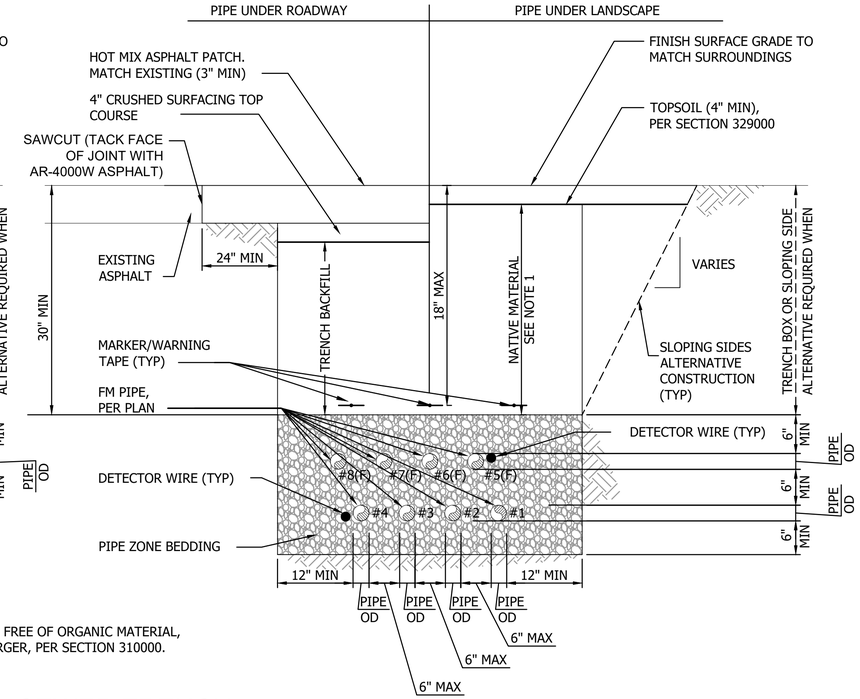

NOTES:

1. COMPACTED NATIVE BACKFILL FREE OF ORGANIC MATERIAL, DEBRIS, AND ROCKS 4" OR LARGER, PER SECTION 310000.

TYPICAL SEWER TRENCH SECTION

5 SCALE : NONE

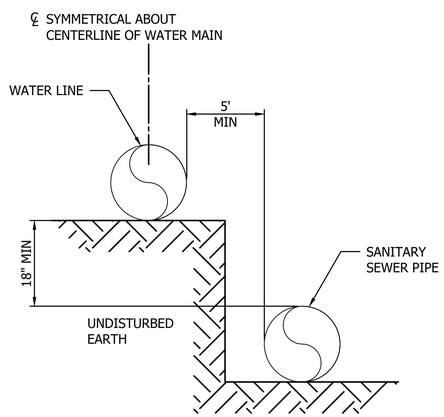

WATER LINE AND SANITARY SEWER SEPARATION UNUSUAL CONDITIONS PARALLEL CONSTRUCTION DETAIL

2 SCALE : NONE

NOTES:

1. REFERENCE THE WASHINGTON STATE DEPARTMENT OF ECOLOGY CRITERIA FOR SEWAGE WORKS DESIGN (ORANGE BOOK), SECTIONS C1-9.1.2 AND C 1-9.1.4 FOR CONSTRUCTION WHERE THE MINIMUM SEPARATION REQUIREMENTS CAN NOT BE ACHIEVED.

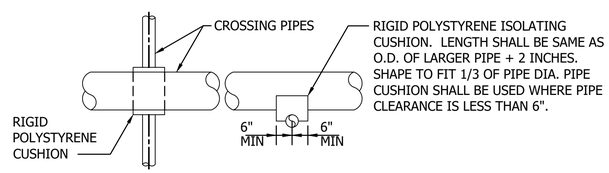

PLAN SECTION

TYPICAL PIPE CUSHION DETAIL

3 SCALE : NONE

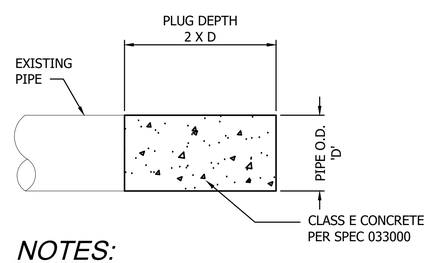

NOTES:

1. DETAIL FOR USE ONLY ON PIPES TO BE ABANDONED.
2. CONTRACTOR TO ENSURE THAT THE OPENING OF THE PIPE IS COMPLETELY FILED AND THOROUGHLY PLUGGED.

PIPE PLUG DETAIL

4 SCALE : NONE

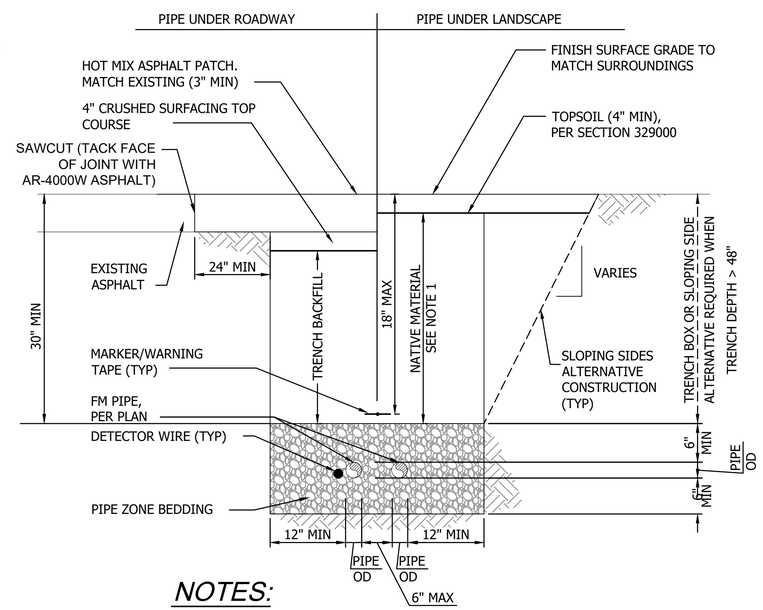

NOTES:

1. COMPACTED NATIVE BACKFILL FREE OF ORGANIC MATERIAL, DEBRIS, AND ROCKS 4" OR LARGER, PER SECTION 310000.

TYPICAL SEWER TRENCH SECTION

6 SCALE : NONE

Call 811 two business days before you dig

SHEET 157 OF 226

BID SET

CAD NO.

NO.	REVISIONS	INT.	APP.	DATE

ACTION	BY	DATE
DESIGNED	YM	04/11/25
DRAWN	YM	04/11/25
CHECKED (FIELD)		
CHECKED (HDQTS.)		

BRIAN E BUNKER STATE OF WASHINGTON 46055 REGISTERED PROFESSIONAL ENGINEER 4/11/2025

REGISTERED STAMP

WASHINGTON STATE PARKS AND RECREATION COMMISSION

NISQUALLY STATE PARK

PHASE 3A MAINTENANCE BUILDING AND WWTF

TRENCH DETAILS

B-C1.5

SCALE

PARKS FILE#

U:\PSO\Projects\Clients\4763-RW Droll\216-4763-010 Nisqually\ParkWWOptions\99Svcs\CADD\DWG\PS18062A-C1.5-1.6.dwg
Apr-11-25 8:30am

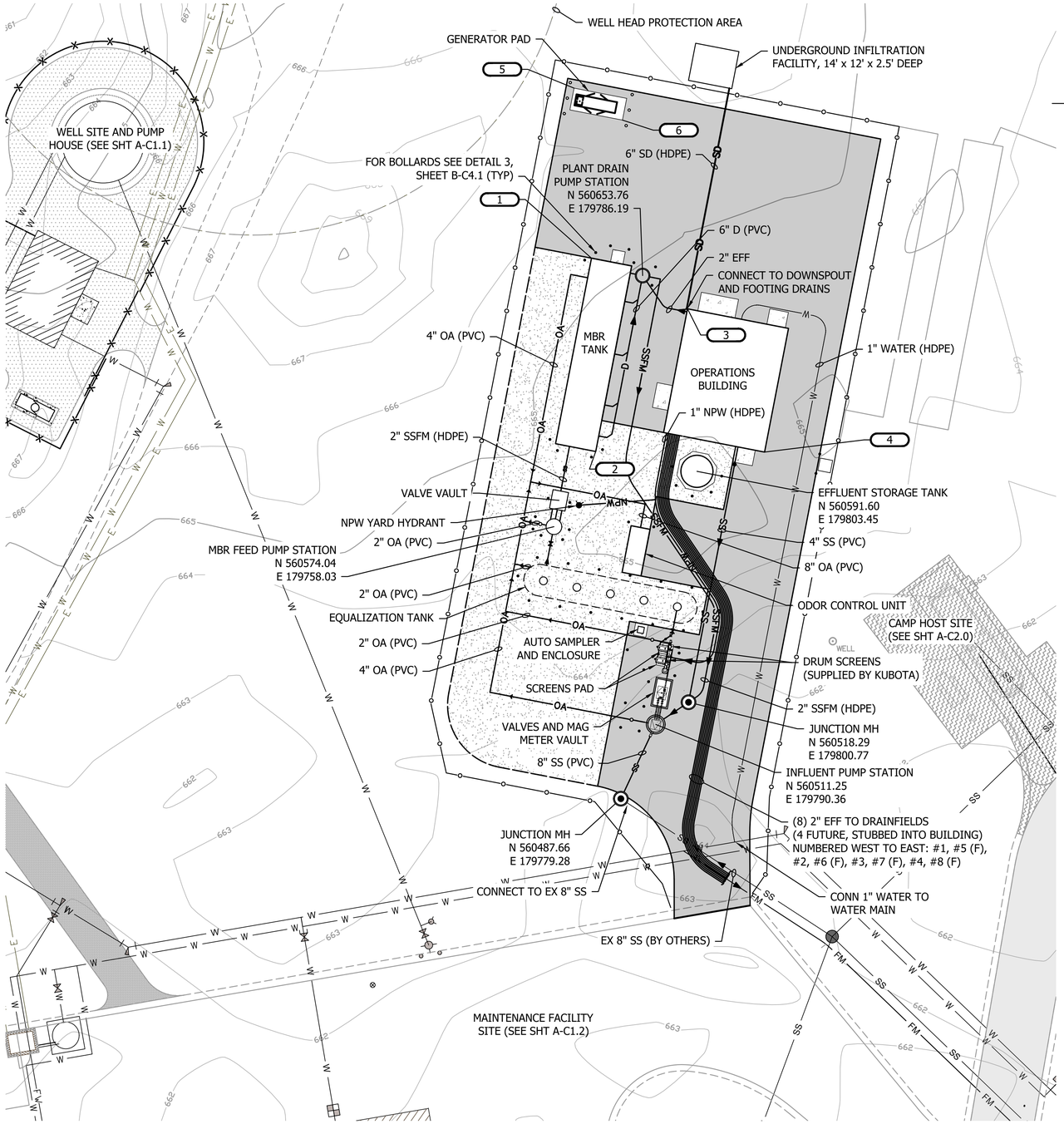

SITE UTILITY PLAN

SCALE 1" = 20'

NOTES:

1. SEE SHEET B-M3.2 FOR ADDITIONAL PIPING DETAIL BETWEEN OPERATIONS BUILDING AND MBR FACILITY.
2. COORDINATE ALL UTILITIES CONNECTING WITH OPERATIONS BUILDING WITH MECHANICAL AND ELECTRICAL SHEETS.
3. SEE SHEET B-S5.0 FOR EQUIPMENT SLAB DETAILS.

COORDINATE TABLE

NUMBER	NORTHING	EASTING	DESCRIPTION
1	560659.28	179769.94	MBR TANK NW CORNER
2	560597.91	179771.30	MBR TANK SE CORNER
3	560643.20	179800.44	OPERATIONS BUILDING NW CORNER
4	560597.72	179824.91	OPERATIONS BUILDING SE CORNER
5	560713.26	179764.41	GENERATOR PAD NW CORNER
6	560703.11	179779.78	GENERATOR PAD SE CORNER

Call 811 two business days before you dig

SHEET 158 OF 226

BID SET

CAD NO.

NO.	REVISIONS	INT.	APP.	DATE

ACTION	BY	DATE
DESIGNED	BB	04/11/25
DRAWN	KT	04/11/25
CHECKED (FIELD)		
CHECKED (HDQTS.)		

BRIAN E BUNKER, STATE OF WASHINGTON, 46055, REGISTERED PROFESSIONAL ENGINEER
4/11/2025

REGISTERED STAMP

WASHINGTON STATE PARKS AND RECREATION COMMISSION

NISQUALLY STATE PARK

PHASE 3A MAINTENANCE BUILDING AND WWTF

WWTF SITE UTILITY PLAN

B-C2.0

SCALE 0 20' 40'

PARKS FILE#

U:\PSO\Projects\Clients\4763-RW Droll\216-4763-010 Nisqually ParkWWOptions\995vcs\CADD\DWG\PS18062A-C2.0.dwg
Apr-11-25 8:41am

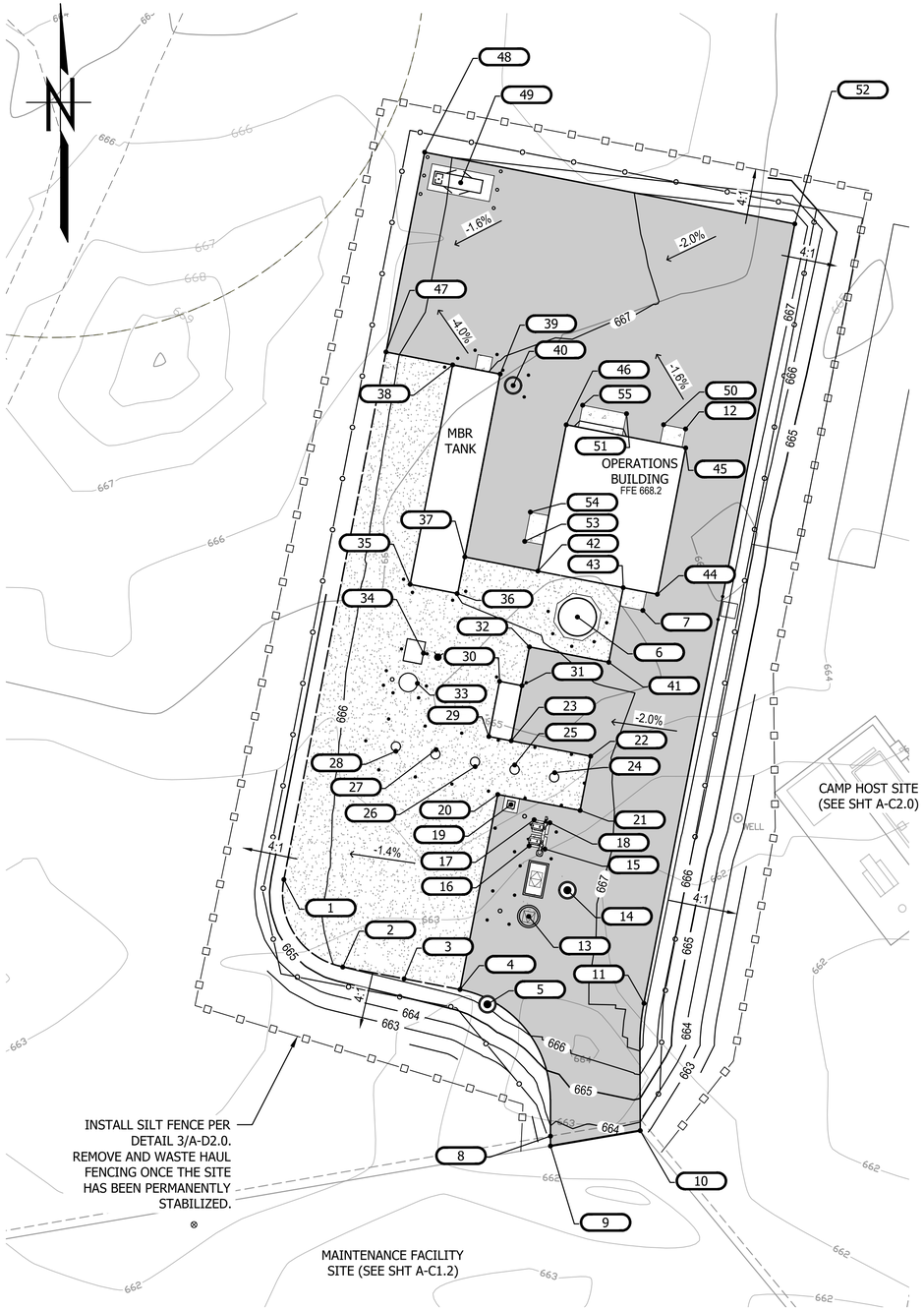

SITE GRADING PLAN

SCALE 1" = 20'

POINT TABLE				
POINT # .	NORTHING	EASTING	ELEVATION	DESCRIPTION
1	560521.16	179724.62	665.850	EG
2	560497.67	179740.43	666.000	EG
3	560494.53	179756.92	666.200	EG
4	560491.64	179771.91	666.390	EP
5	560487.66	179779.28	666.230	SSMH
6	560591.60	179803.45	667.350	CONC PAD
7	560593.38	179821.01	668.110	EC
8	560452.29	179796.21	663.820	EP
9	560449.65	179796.21	663.690	EP
10	560453.76	179820.32	663.640	EP
11	560487.93	179821.33	667.210	EP
12	560642.09	179832.48	668.110	EC
13	560511.25	179790.36	666.700	PS
14	560518.29	179800.77	666.850	SSMH
15	560529.35	179794.70	666.710	EC
16	560530.17	179790.47	666.680	EC
17	560537.21	179791.83	666.720	EC
18	560536.39	179796.06	666.740	EC
19	560541.26	179785.60	666.700	CONC PAD
20	560543.99	179782.05	666.690	EP

POINT TABLE				
POINT # .	NORTHING	EASTING	ELEVATION	DESCRIPTION
21	560539.70	179804.17	666.810	EP
22	560554.25	179806.99	666.890	EP
23	560558.38	179785.68	666.770	EP
24	560549.84	179797.33	666.810	EQ TANK
25	560551.91	179786.59	666.760	EQ TANK
26	560551.46	179775.98	666.610	EQ TANK
27	560556.01	179765.50	666.440	EQ TANK
28	560555.58	179754.70	666.260	EQ TANK
29	560559.54	179779.67	666.680	EC
30	560574.35	179782.53	666.760	EC
31	560573.19	179788.54	666.850	EP
32	560583.59	179790.56	666.940	EP
33	560573.81	179760.48	666.380	PS
34	560581.91	179762.10	666.480	VAULT
35	560600.38	179758.54	666.310	MBR TANK
36	560597.91	179771.15	667.020	MBR TANK
37	560607.73	179773.20	667.150	MBR TANK
38	560659.28	179769.94	666.600	MBR TANK
39	560656.81	179782.71	667.130	MBR TANK
40	560653.76	179786.19	667.260	SSMH

POINT TABLE				
POINT # .	NORTHING	EASTING	ELEVATION	DESCRIPTION
41	560579.47	179811.87	667.040	EP
42	560603.93	179792.84	667.150	OP BUILDING
43	560599.49	179815.75	667.150	OP BUILDING
44	560597.72	179824.91	667.150	OP BUILDING
45	560636.99	179832.51	667.630	OP BUILDING
46	560643.20	179800.44	667.630	OP BUILDING
47	560662.75	179752.04	665.850	EP
48	560716.37	179762.42	665.850	EP
49	560708.19	179772.10	666.060	CONC PAD
50	560643.23	179826.59	668.110	EC
51	560646.18	179816.64	668.100	EC
52	560697.12	179861.81	667.880	EP
53	560611.92	179789.29	668.110	EC
54	560619.77	179790.81	668.110	EC
55	560648.46	179804.86	668.100	EC

NOTES:

1. 50± BOLLARDS SHALL BE PLACED A MINIMUM OF TWO FEET FROM EACH STRUCTURE. COORDINATE WITH ENGINEER FOR BOLLARD PLACEMENT.
2. CONTRACTOR TO PROVIDE ADDITIONAL CLEARING AS NECESSARY AND IN ACCORDANCE WITH SPECIFICATIONS. ALL AREA WITHIN FENCE LINE TO BE CLEARED AND GRUBBED OF ALL TREES AND VEGETATION.

VOLUME SUMMARY			
NAME	AREA (SQ. FT.)	CUT (CU. YD.)	FILL (CU. YD.)
4" HMA	12990	-	161.0
6" CSTC UNDER HMA	12990	-	242.0
4" CSTC FOR GRAVEL AREA	7150	-	89.0
CUT/FILL	27084	0.64	2171.0

SURFACE RESTORATION

HMA PAVEMENT TYPE B

CEMENT CONCRETE PAD

GRAVEL SURFACE

RESTORATION IN OTHER AREAS SHALL BE AS DIRECTED BY THE ENGINEER.

Call 811 two business days before you dig

SHEET 159 OF 226

BID SET

CAD NO.

NO.	REVISIONS	INT.	APP.	DATE

ACTION	BY	DATE
DESIGNED	BB	04/11/25
DRAWN	KT	04/11/25
CHECKED (FIELD)		
CHECKED (HDQTS.)		

BRIAN E BUNKER, STATE OF WASHINGTON, 46055, REGISTERED PROFESSIONAL ENGINEER

4/11/2025

REGISTERED STAMP

WASHINGTON STATE PARKS AND RECREATION COMMISSION

NISQUALLY STATE PARK

PHASE 3A MAINTENANCE BUILDING AND WWTF

WWTF SITE GRADING PLAN

B-C3.0

SCALE 20' 0 40'

PARKS FILE#

U:\PSO\Projects\Clients\4763-RW Droll\216-4763-010 Nisqually PorkWWOptions\99Svcs\CADD\DWG\PS180620A-C3.0.dwg
Apr-11-25 8:39am

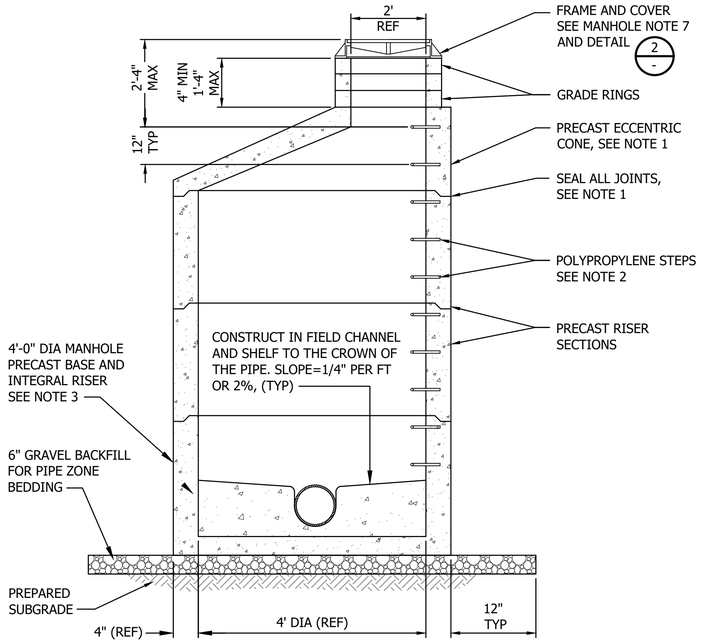

SANITARY SEWER MANHOLE DETAIL

1/TYP NO SCALE

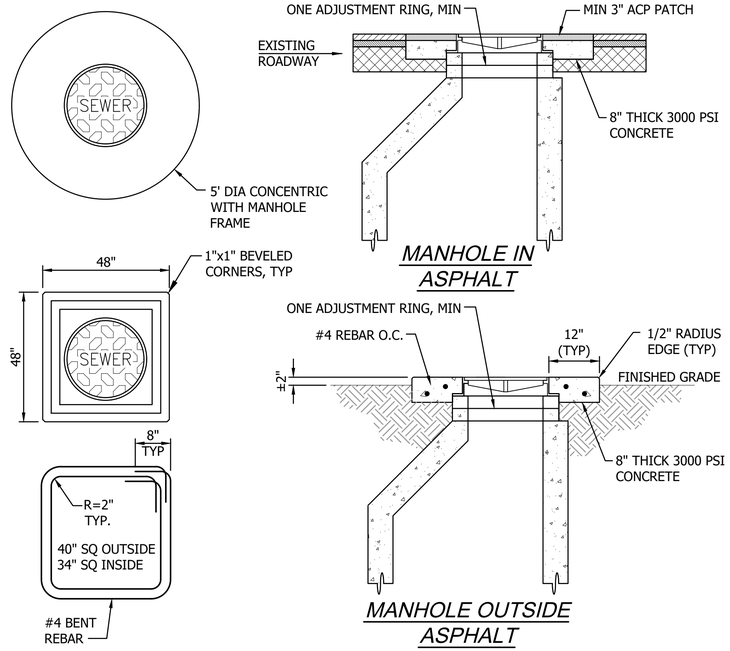

MANHOLE DETAIL

2/- NO SCALE

MANHOLE NOTES:

1. PRECAST MANHOLES SHALL MEET THE REQUIREMENTS OF ASTM C478. JOINTS SHALL BE RUBBER GASKETED CONFORMING TO ASTM C443 AND SHALL BE GROUTED FROM THE INSIDE. LIFT HOLES SHALL BE GROUTED FROM THE OUTSIDE AND INSIDE OF THE MANHOLE.
2. STEPS IN MANHOLE SHALL HAVE 6" MINIMUM CLEARANCE FROM WALL.
3. PRECAST BASES SHALL BE FURNISHED WITH CUTOUTS OR KNOCKOUTS. KNOCKOUTS SHALL HAVE A WALL THICKNESS OF 2" MINIMUM.
4. CONNECTION TO MANHOLE SHALL BE MADE USING KOR-N-SEAL BOOT OR EQUIVALENT.
5. SEE DETAIL 2/- FOR MANHOLE COLLAR INSTALLATION.
6. MANHOLES OUTSIDE OF ASPHALT PAVEMENT SHALL HAVE REINFORCING STEEL AS SHOWN IN DETAIL 2/-. DEFORMED BAR SHALL MEET ASTM A615 GRADE 40.
7. MANHOLE CIRCULAR FRAME AND COVER SHALL MEET THE REQUIREMENTS OF WSDOT STANDARD PLAN B-30.70-00 AND SHALL BE CAPABLE OF BEING BOLTED DOWN.

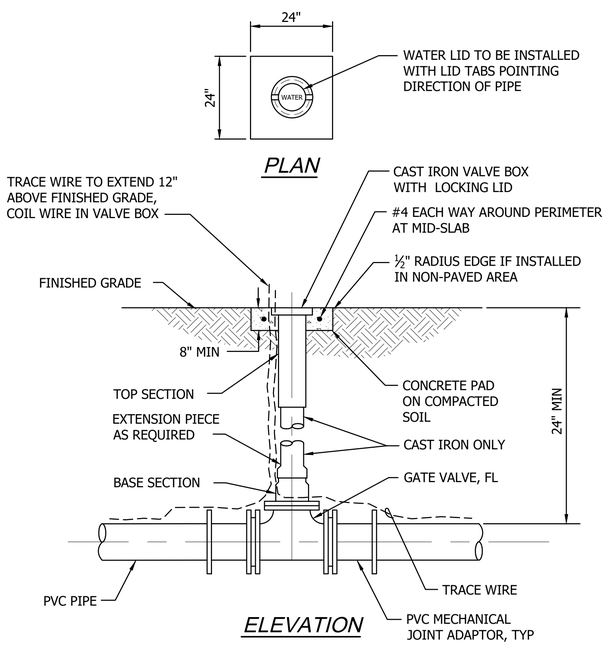

GATE VALVE DETAIL

3/B-C5.0 NO SCALE

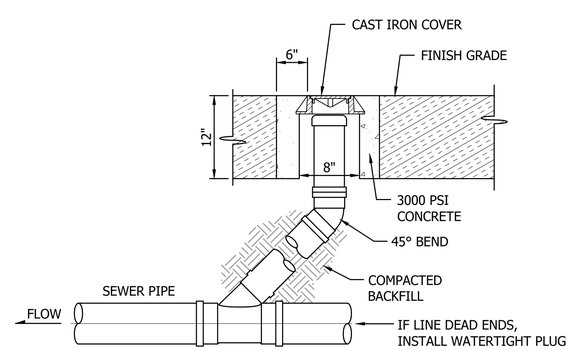

GRAVITY SEWER CLEANOUT DETAIL

4/TYP NO SCALE

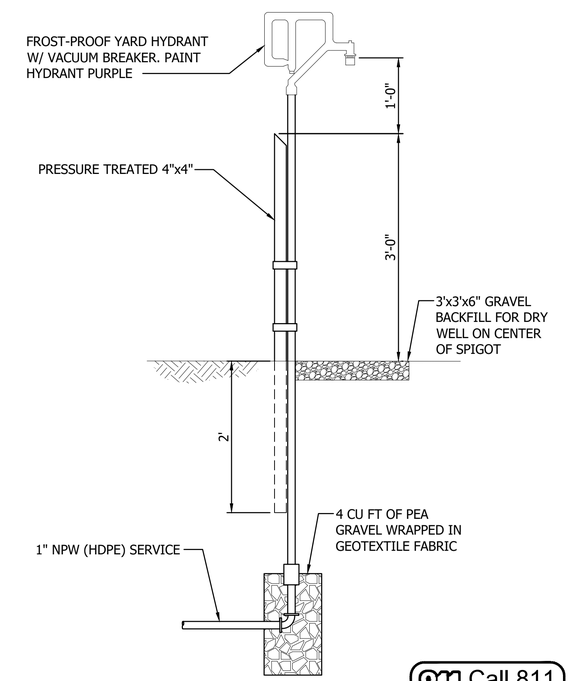

YARD HYDRANT ASSEMBLY DETAIL

2/B-C2.0 NO SCALE

Call 811 two business days before you dig

BID SET

SHEET 160 OF 226

CAD NO.

	DATE	APP.	INT.	REVISIONS	NO.

ACTION	BY	DATE
DESIGNED	KT	04/11/25
DRAWN	KT	04/11/25
CHECKED (FIELD)		
CHECKED (HDQTS.)		

BRIAN E BUNKER, STATE OF WASHINGTON, 46055, REGISTERED PROFESSIONAL ENGINEER
4/11/2025

REGISTERED STAMP

WASHINGTON STATE PARKS AND RECREATION COMMISSION

NISQUALLY STATE PARK

PHASE 3A MAINTENANCE BUILDING AND WWTF

CIVIL DETAILS

B-C4.0

SCALE

NO SCALE

PARKS FILE#

U:\PSO\Projects\Clients\4763-RW Droll\216-4763-010 Nisqually-PorkWWOptions\99Svcs\CADD\DWG\PS180620-C4.0.dwg
Apr-11-25 8:38am

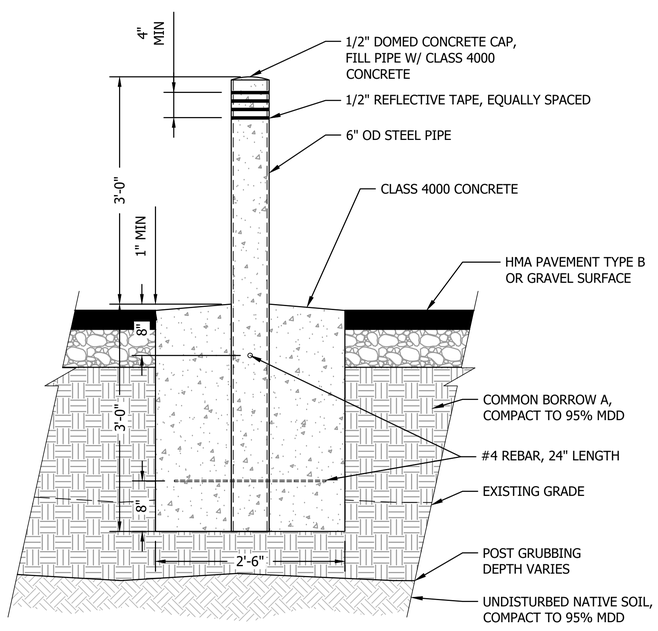

STANDARD BOLLARD DETAIL

3 TYP — NO SCALE

NOTES:

1. PRIMARY BACKFILL MATERIAL SHALL BE EITHER ROUNDED STONE MEETING ASTM C33, SIZES 6, 67, OR 7, OR CRUSHED STONE MEETING ASTM C33, SIZES 7 OR 8.
2. SECONDARY BACKFILL MATERIAL SHALL BE EITHER CLEAN NATIVE MATERIAL OR COARSE SAND/GRAVEL. 100% OF BACKFILL MATERIAL MUST PASS THROUGH A 1-INCH SIEVE.

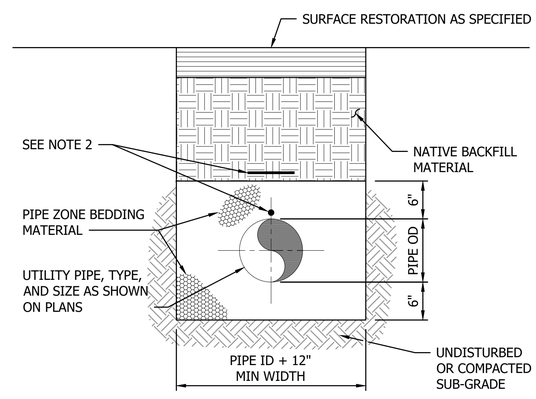

NOTES:

1. TRENCHING SHALL MEET THE REQUIREMENTS OF WSDOT SECTION 7-08.3(1) AND 7-09.3(7).
2. INSTALL DETECTABLE MARKING TAPE AND 14 GA LOCATOR WIRE ON PRESSURE SEWER AND PERMEATE PIPES.

PIPE TRENCHING BEDDING AND BACKFILL DETAIL

4 TYP — NO SCALE

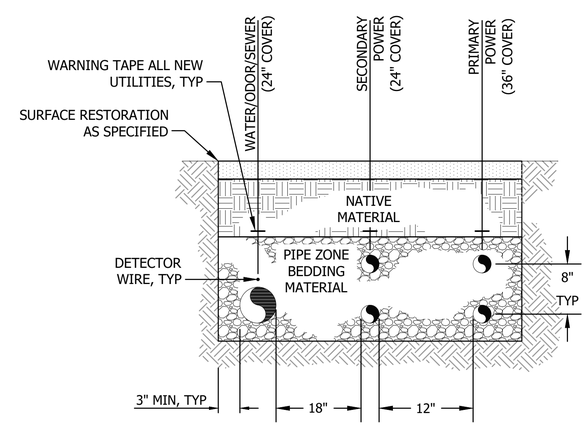

UTILITIES SEPERATION DETAIL

5 TYP — NO SCALE

Call 811 two business days before you dig

SHEET 161 OF 226

BID SET

CAD NO.

NO.	REVISIONS	INT.	APP.	DATE

ACTION	BY	DATE
DESIGNED	KT	04/11/25
DRAWN	KT	04/11/25
CHECKED (FIELD)		
CHECKED (HDQTS.)		

BRIAN E BUNAJER — STATE OF WASHINGTON — 46055 — REGISTERED PROFESSIONAL ENGINEER

4/11/2025

REGISTERED STAMP

WASHINGTON STATE PARKS AND RECREATION COMMISSION

NISQUALLY STATE PARK

PHASE 3A MAINTENANCE BUILDING AND WWTF

CIVIL DETAILS

B-C4.1

SCALE

NO SCALE

PARKS FILE#

U:\PSO\Projects\Clients\4763-RW Droll\216-4763-010 Nisqually\ParkWWOptions\99Svcs\CADD\DWG\PS180620-C4.0.dwg
Apr-11-25 11:10am

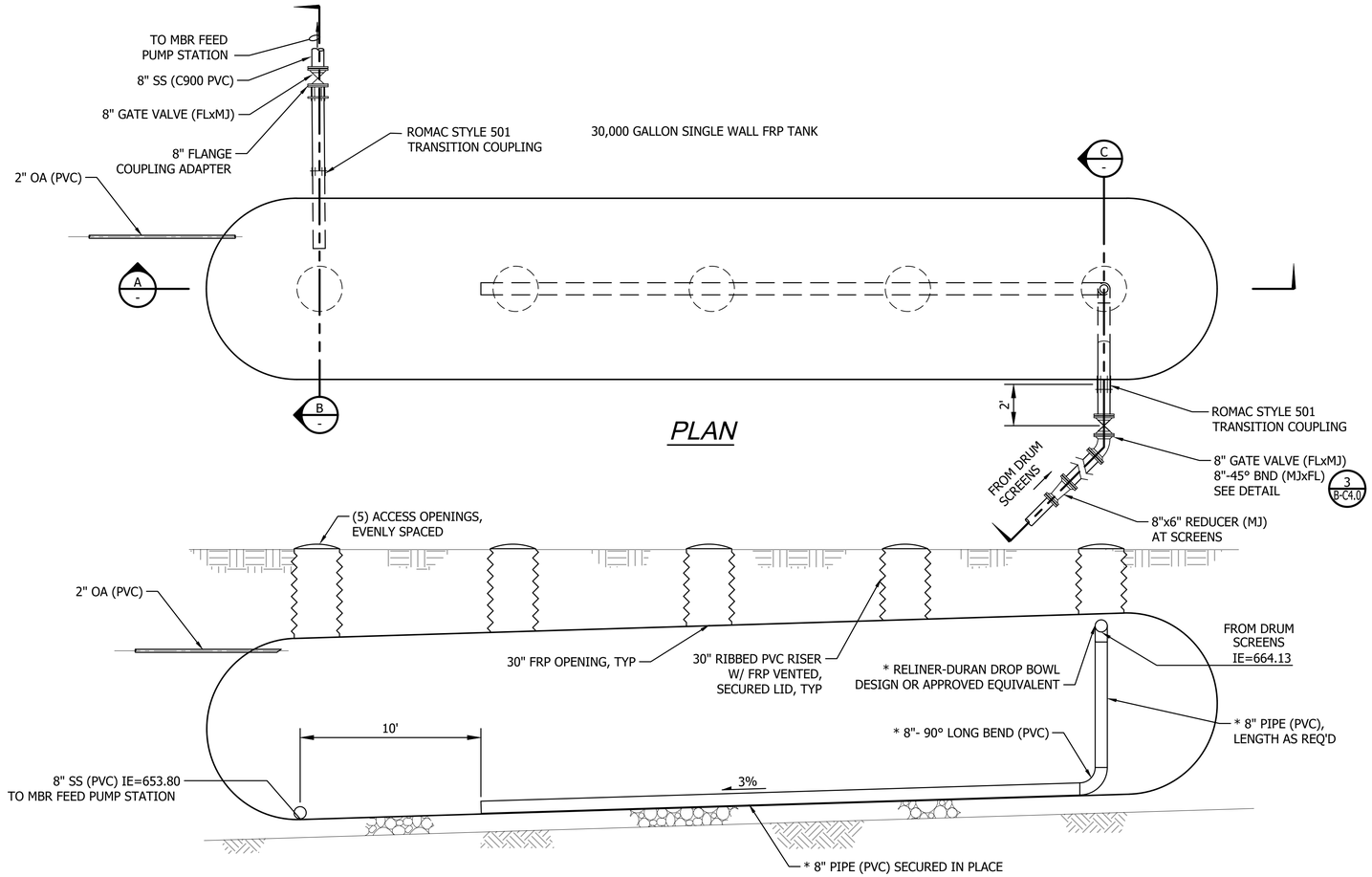

PLAN

SECTION A

* TANK MANUFACTURER SHALL INSTALL DROP BOWL AND INTERIOR PIPING PRIOR TO SHIPPING. PIPING SHALL BE SECURED IN PLACE WITH FABRICATED HOOPS OR CLAMPS TO ALLOW FOR PIPE REMOVAL BY MAINTENANCE STAFF.

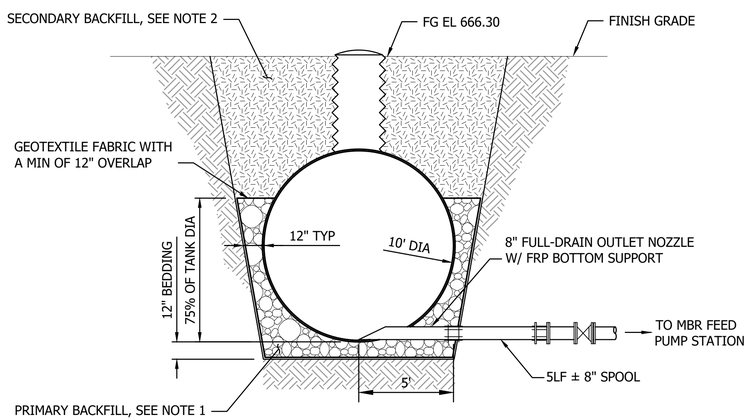

SECTION B

EQUALIZATION TANK

SCALE: 1"=4'

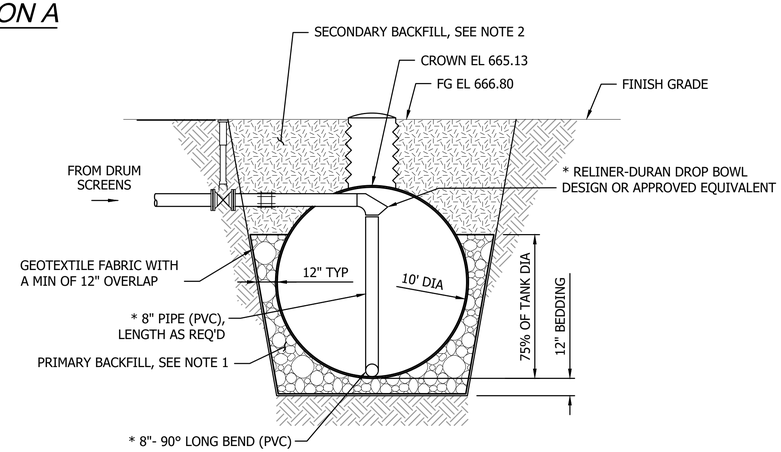

SECTION C

EQUALIZATION TANK

SCALE: 1"=4'

NOTES:

1. PRIMARY BACKFILL MATERIAL SHALL BE EITHER ROUNDED STONE MEETING ASTM C33, SIZES 6, 67, OR 7, OR CRUSHED STONE MEETING ASTM C33, SIZES 7 OR 8.
2. SECONDARY BACKFILL MATERIAL SHALL BE EITHER CLEAN NATIVE MATERIAL OR COARSE SAND/GRAVEL. 100% OF BACKFILL MATERIAL MUST PASS THROUGH A 1-INCH SIEVE.

Call 811 two business days before you dig

SHEET 162 OF 226

BID SET

CAD NO.

NO.	REVISIONS	INT.	APP.	DATE

ACTION	BY	DATE
DESIGNED	YM	04/11/25
DRAWN	YM	04/11/25
CHECKED (FIELD)		
CHECKED (HDQTS.)		

BRIAN E BUNKER, STATE OF WASHINGTON, 46055, REGISTERED PROFESSIONAL ENGINEER
4/11/2025

REGISTERED STAMP

WASHINGTON STATE PARKS AND RECREATION COMMISSION

NISQUALLY STATE PARK

PHASE 3A MAINTENANCE BUILDING AND WWTF

EQUALIZATION TANK PLAN AND SECTIONS

B-C5.0

SCALE 0 1" 2"
TWO INCHES AT FULL SCALE
IF NOT, SCALE ACCORDINGLY

PARKS FILE#

U:\PSO\Projects\Clients\4763-RW Droll\216-4763-010 Nisqually PorkWWOptions\99Svcs\CADD\DWG\PS180620-C4.0.dwg
Apr-11-25 11:10am

ABBREVIATIONS

ALT	ALTERNATE	JT	JOINT
AB	ANCHOR BOLT	LOCN	LOCATION
ADH	ADHESIVE	LONG	LONGITUDINAL
APPD	APPROVED	LLH	LONG LEG HORIZONTAL
APPROX	APPROXIMATE	LLV	LONG LEG VERTICAL
AC	ASPHALTIC CONCRETE	LP	LOW POINT
AL	ALUMINUM	MB	MACHINE BOLT
@	AT	MK	MARK
B/B	BACK TO BACK	MAX	MAXIMUM
BM	BEAM OR BENCH MARK	MS	MILD STEEL
BLKG	BLOCKING	MIN	MINIMUM
BOT	BOTTOM	MISC	MISCELLANEOUS
BLDG	BUILDING	MC	MOMENT CONNECTION
C	CHANNEL	NF	NEAR FACE
CH'D	CHECKERED	NS	NEAR SIDE
CIP	CAST IN PLACE	NOM	NOMINAL
CTR	CENTER	NIC	NOT IN CONTRACT
CLR	CLEAR	NTS	NOT TO SCALE
C/C	CENTER TO CENTER	NO OR #	NUMBER
CL	CLEAR/CLEARANCE	OC	ON CENTER
COL	COLUMN CONC CONCRETE	OPNG	OPENING
CMU	CONCRETE MASONRY UNIT	OPP	OPPOSITE
CONN	CONNECTION, CONNECT	OD	OUTSIDE DIAMETER
CONST	CONSTRUCTION	O/O	OUT TO OUT
CNJ	CONSTRUCTION JOINT	OA	OVERALL
CJ	CONTROL JOINT	OH, O/H	OVERHEAD
CONT	CONTINUOUS	O.S.	OUTSIDE
DET	DETAIL	OSB	ORIENTED STRAND BOARD
DIA	DIAMETER	PERP	PERPENDICULAR
DIM	DIMENSION	PL	PLATE
DO	DITTO	PWD	PLYWOOD
DBL	DOUBLE	PC	PIECE OF
DN	DOWN	PCC	PRECAST CONCRETE
DWG	DRAWING	PREFAB	PREFABRICATED
EA	EACH	PROJ	PROJECTION, PROJECT
EF	EACH FACE	PSF	POUNDS PER SQUARE FOOT
ES	EACH SIDE	PSI	POUNDS PER SQUARE INCH
EW	EACH WAY	PT	PRESSURE TREATED
EL OR ELEV	ELEVATION	R	RISER
EMBD	EMBEDDED/EMBEDMENT	RCP	REINFORCED CONCRETE PIPE
ENGR	ENGINEER	REF	REFERENCE
= OR EQ	EQUAL	REINF	REINFORCING/REINFORCE
EXIST	EXISTING	REQD	REQUIRED
EJ	EXPANSION JOINT	REV	REVISION
EPS	EXPANDED POLYSTYRENE	RO	ROUGH OPENING
EXT	EXTERNAL/EXTERIOR	SCH	SCHEDULE
FAB	FABRICATE	SECT	SECTION
FOS	FACE OF STUDS	SIM	SIMILAR
FOW	FACE OF WALL	SOG	SLAB ON GRADE
F/F	FACE TO FACE	SLV	SLEEVE
F/G	FIBERGLASS	SPCS	SPACES
FS	FAR SIDE	SPEC	SPECIFICATION, SPECIFY
FIN	FINISH/FINISHED	SQ	SQUARE
FLG	FLANGE	STGD	STAGGERED
FL	FLOOR	SS	STAINLESS STEEL
FD	FLOOR DRAIN	STD	STANDARD
FH	FLAT HEAD	STL	STEEL
FO	FLOOR OPENING	STIFF	STIFFENER
FT OR '	FEET	STRUCT	STRUCTURAL
FTG	FOOTING	T	TREADS
FND	FOUNDATION	THK	THICK
GALV	GALVANIZED	T&B	TOP & BOTTOM
GA	GAUGE	T&G	TONGUE AND GROOVE
GLB	GLULAM BEAM	TOC	TOP OF CONCRETE
GWB	GYPSUM WALL BOARD	TOG	TOP OF GRATING
HDW	HARDWARE	TOS	TOP OF STEEL
HP	HIGH POINT	TOW	TOP OF WALL
H OR HORIZ	HORIZONTAL	TR	TREATED
HSS	HOLLOW STRUCT SHAPE	TYP	TYPICAL
IN OR "	INCH	U/S	UNDERSIDE
INCL	INCLUDED/INCLUDING	UNO	UNLESS NOTED OTHERWISE
ID	INSIDE DIAMETER	V OR VERT	VERTICAL
INTER	INTERMEDIATE	WSHR	WASHER
INT	INTERNAL/INTERIOR	W/	WITH
I.S.	INSIDE	WP	WORK POINT
		WS	WATER STOP
		WWF	WELDED WIRE FABRIC

DESIGN CRITERIA

APPLICABLE BUILDING CODES
INTERNATIONAL BUILDING CODE, IBC 2021 EDITION

STRUCTURAL DESIGN LOADS:
PER ASCE/SEI 7-16 DESIGN RISK CATEGORY = III
Is=1.10, Iw=1.0, Ie=1.25

LIVE LOADS (UNLESS NOTED)
OFFICE/PROCESS AREAS:..300 PSF
LOFT/ATTIC FLOORS...50 PSF
HATCHES AND FLOOR PLATES..........PERSONNEL LOAD: 100 PSF
TRAFFIC LOAD: H-20

ROOF LOADS
LIVE LOAD..25 PSF
SNOW LOAD...35 PSF
DEAD LOAD..AS CALCULATED
COLLATERAL LOAD AT CEILINGS...10 PSF

WIND LOADS
BASIC WIND SPEED...105 MPH
EXPOSURE...C
COMPONENTS AND CLADDING LOAD = 16 PSF

CRANE LOAD
1/2 TON MAINTENANCE CRANE..2500 # HANGER LOAD

SEISMIC LOADS
SITE CLASS = D
Ss = 1.188, S1 = 0.424
S_{DS} = 0.811 S_{D1} = NULL
PGAm = 0.55

BUILDINGS SEISMIC FORCE RESISTING SYSTEMS =
SPECIAL REINFORCED MASONRY SHEAR WALL R = 5, Cs = 0.21

TANKS DESIGNED FOR IMPULSIVE AND CONVECTIVE LOADINGS
PER ACI 350 AND ASCE 7-16.

FOUNDATIONS

BASED ON:
"GEOTECHNICAL ENGINEERING SERVICES, PROPOSED WASTEWATER TREATMENT PLANT AND SANITARY SEWER LINE, NISQUALLY STATE PARK, PIERCE COUNTY, WASHINGTON" BY GEOENGINEERS, OCT 21, 2021.

SOIL BEARING PRESSURE ....3000 PSF
LATERAL PASSIVE BEARING PRESSURE, STATIC........................300 PCF
SOIL FRICTION FACTOR, SLIDING...0.35

CONTINUOUS INSPECTION OF FILL PLACED AND COMPACTED UNDER BUILDING SLAB AND FOOTINGS REQUIRED BY AN APPROVED, INDEPENDENT TESTING AGENCY. FILL SHALL CONFORM TO GEOTECHNICAL RECOMMENDATIONS AND SHALL BE COMPACTED TO 95% OF THE MAXIMUM DRY DENSITY. FILL SHALL BE PLACED IN MAX. 8" LIFTS.

INSPECTIONS

CONTRACTOR SHALL BE RESPONSIBLE FOR REQUESTING AND COORDINATING REQUIRED BUILDING DEPARTMENT INSPECTIONS. IN ADDITION, SPECIAL INSPECTIONS SHALL BE PERFORMED IN ACCORDANCE WITH THE TABLE ON THIS SHEET. THESE INSPECTIONS SHALL BE PERFORMED BY A CURRENTLY WABO CERTIFIED INSPECTOR UNDER THE SUPERVISION OF A REGISTERED PROFESSIONAL ENGINEER.

THE SPECIAL INSPECTOR SHALL OBSERVE THE WORK ASSIGNED FOR CONFORMANCE WITH THE APPROVED DESIGN DRAWINGS AND SPECIFICATIONS.

THE SPECIAL INSPECTOR SHALL FURNISH INSPECTION REPORTS TO THE BUILDING OFFICIAL, THE ENGINEER OF RECORD, THE ARCHITECT OF RECORD, AND OTHER DESIGNATED PERSONS. ALL DISCREPANCIES SHALL BE BROUGHT TO THE IMMEDIATE ATTENTION OF THE GENERAL CONTRACTOR FOR CORRECTION. THEN IF NOT IN CONFORMANCE, DISCREPANCIES SHALL BE BROUGHT TO THE PROPER DESIGN AUTHORITY AND TO THE BUILDING OFFICIAL.

THE SPECIAL INSPECTOR SHALL SUBMIT A SEALED FINAL REPORT BY A REGISTERED PROFESSIONAL ENGINEER STATING WHETHER THE WORK REQUIRING SPECIAL INSPECTION WAS IN CONFORMANCE WITH THE APPROVED PLANS AND SPECIFICATIONS AND THE APPLICABLE WORKMANSHIP PROVISIONS OF THE IBC.

SPECIAL INSPECTION SCHEDULE

ITEM	CI	PI	REMARKS/REFERENCES
GENERAL:			
PREFABRICATED ITEMS		X	
SITE PREPARATION, FILL PLACEMENT, SOIL COMPACTION	X		BY GEOTECHNICAL ENGINEER OR AN APPROVED TESTING AGENCY
CONCRETE:			IBC TABLE 1705.3, ACI 318-2014
REINFORCING MATERIALS & PLACEMENT		X	ASTM AS NOTED, ACI 318 CHAPTER 20.25 & 26.6
WELDING - REINFORCING		X	AWS D1.4
ANCHOR RODS, EMBEDDED BOLTS & INSERTS	X		PRIOR TO AND DURING CONCRETE PLACEMENT
POST-INSTALLED ANCHORS			ACI 318 26.7
ADHESIVE ANCHORS	X		ACI 318 17.8.2.4
MECHANICAL ANCHORS		X	ACI 318 17.8.2
USE OF REQUIRED MIX DESIGN		X	ACI 318 26.4
CONCRETE SLUMP, AIR CONTENT, TEMPERATURE & TEST SPECIMENS	X		WHILE MAKING SPECIMENS FOR STRENGTH TESTS, ACI 318 5.6
CONCRETE PLACEMENT	X		ACI 318 5.9, 5.10
CONCRETE CURING		X	ACI 318 5.11, 5.13
MASONRY:			TMS 402/602-2013 TABLE 3.1.3 LEVEL 3
1. VERIFY COMPLIANCE WITH THE APPROVED SUBMITTALS		X	TMS 602 ART 1.5
2. VERIFY THAT THE FOLLOWING ARE IN COMPLIANCE:			
a. PROPORTIONS OF SITE-MIXED MORTAR AND GROUT		X	TMS 602 ART 2.1, 2.6
b. GRADE, TYPE, AND SIZE OF REINFORCEMENT AND ANCHOR BOLTS		X	TMS 602 ART 2.4, 3.4
c. PLACEMENT OF MASONRY UNITS AND CONSTRUCTION OF MORTAR JOINTS		X	TMS 602 ART 3.3 B
d. PLACEMENT OF REINFORCEMENT AND CONNECTORS	X		TMS 602 ART 3.2 E, 3.4
e. GROUT SPACE PRIOR TO GROUTING	X		TMS 602 ART 3.2 D, 3.2 F
f. PLACEMENT OF GROUT AND PRESTRESSING GROUT FOR BONDED TENDONS	X		TMS 602 ART 3.5
g. SIZE AND LOCATION OF STRUCTURAL ELEMENTS		X	TMS 602 ART 3.3 F
h. TYPE, SIZE, AND LOCATION OF ANCHORS INCLUDING OTHER DETAILS OF ANCHORAGE OF MASONRY TO STRUCTURAL MEMBERS, FRAMES, OR OTHER CONSTRUCTION	X		TMS 402 SEC. 1.2.1(e), 6.1.4.3, 6.2.1
i. WELDING OF REINFORCEMENT (NOT ALLOWED UNLESS ASTM A706 BARS)	X		AWS D1.4
j. PREPARATION, CONSTRUCTION, AND PROTECTION OF MASONRY DURING COLD WEATHER OR HOT WEATHER		X	TMS 602 ART 1.8 C, 1.8 D
3. OBSERVE PREPARATION OF GROUT SPECIMENS, MORTAR SPECIMENS, AND/ OR PRISMS. (NOT REQUIRED IF UNIT STRENGTH METHOD IS SUBMITTED PER TMS 602 ART 1.4.B)	X		TMS 602 ART 1.4 B
STEEL:			
1. MATERIAL VERIFICATION OF HIGH-STRENGTH BOLTS, NUTS, AND WASHERS:			
A. IDENTIFICATION TO CONFORM TO ASTM STANDARDS SPECIFIED IN THE APPROVED CONSTRUCTION DOCUMENTS		X	SECTION A3.4; AISC LRFD, SECTION A3.3
2. INSPECTION OF HIGH-STRENGTH BOLTING:			
A. BEARING-TYPE CONNECTIONS		X	AISC LRFD SECTION M2.5
3. MATERIAL VERIFICATION OF STRUCTURAL STEEL:			
A. IDENTIFICATION MARKERS TO CONFORM TO ASTM STANDARDS SPECIFIED IN THE APPROVED CONSTRUCTION DOCUMENTS		X	ASTM A 6 OR ASTM A 568
4. INSPECTION OF WELDING:			
A. COMPLETE AND PARTIAL PENETRATION GROOVE WELDS		X	AWS D1.1
B. SINGLE-PASS FILLET WELDS < 5/16"		X	AWS D1.1
5. INSPECTION OF STEEL FRAME JOINTS FOR COMPLIANCE WITH APPROVED CONSTRUCTION DOCUMENTS.		X	
WOOD:			
SPECIES & GRADE OF WOOD MATERIALS		X	
NAILING OF FRAMING & CONNECTORS	X		PER IBC TABLE 2304.10 & MANUFACTURERS REQUIREMENTS
TYPE & SPACING OF STRUCTURAL PANEL NAILING	X		

BID SET

INSPECTION SCHEDULE NOTES

1. ITEMS MARKED WITH AN "X" REQUIRE INSPECTION BY A SPECIAL INSPECTOR APPROVED BY THE BUILDING OFFICIAL.
2. ITEMS MARKED "NA" ARE NOT APPLICABLE TO THIS PROJECT.
3. CI = CONTINUOUS INSPECTION DURING PROGRESS OF WORK BY SPECIAL INSPECTOR.
4. PI = PERIODIC INSPECTION BY SPECIAL INSPECTOR AS REQUIRED TO CONFIRM CONFORMANCE OF WORK.
5. TESTING AND INSPECTION REPORTS SHALL BE SUBMITTED TO THE ENGINEER, BUILDING OFFICIAL AND CONTRACTOR.

811 Call 811 two business days before you dig

CAD NO.

	DATE
	APP.
	INT.
	REVISIONS
	NO.

ACTION	BY	DATE
DESIGNED	JL	04/11/25
DRAWN	KT	04/11/25
CHECKED (FIELD)		
CHECKED (HDQTS.)		

JACOB WATSON LINKE
STATE OF WASHINGTON
56738
REGISTERED PROFESSIONAL ENGINEER
4/11/2025

REGISTERED STAMP

WASHINGTON STATE PARKS AND RECREATION COMMISSION

NISQUALLY STATE PARK

PHASE 3A MAINTENANCE BUILDING AND WWTF

GENERAL STRUCTURAL NOTES AND ABBREVIATIONS

B-S1.0

SCALE
NO SCALE

PARKS FILE#

U:\PSO\Projects\Clients\4763-RW Droll\216-4763-010 NisquallyParkWWOptions\99Svcs\CADD\DWG\PS18062A-S1.0.dwg
Apr-11-25 10:12am

STRUCTURAL NOTES:

GENERAL REQUIREMENTS

REFER TO ARCHITECTURAL, MECHANICAL AND ELECTRICAL DRAWINGS FOR SIZE AND LOCATION OF RECESSES, DUCT OPENINGS, PIPING, CONDUITS, EQUIPMENT LOCATION AND ANCHORAGES, ETC, NOT SHOWN.

SUBMIT ALL REQUIRED SHOP DRAWINGS AND RECEIVE THEIR SATISFACTORY REVIEW FROM THE OWNER'S REPRESENTATIVE, PRIOR TO FABRICATION.

COORDINATE AND VERIFY ALL DIMENSIONS WITH ARCHITECTURAL, MECHANICAL OR ELECTRICAL DRAWINGS AND VERIFY ALL DIMENSIONS AND CONDITIONS AT THE PROJECT SITE PRIOR TO STARTING WORK AND NOTIFY THE OWNER'S REPRESENTATIVE IMMEDIATELY OF ANY DISCREPANCIES.

REFER TO SPECIFICATIONS FOR INFORMATION NOT CONTAINED IN THESE NOTES.

CONCRETE

ALL DETAILING, FABRICATION AND ERECTION OF REINFORCING BARS, SHALL BE IN ACCORDANCE WITH MANUAL OF STANDARD PRACTICE FOR DETAILS REINFORCED CONCRETE STRUCTURES ACI 315, LATEST EDITION.

CONCRETE CONSTRUCTION SHALL CONFORM TO ACI 318 BUILDING CODE, LATEST EDITION.

DESIGN STRENGTH
CAST-IN-PLACE CONCRETE, UNLESS OTHERWISE NOTED:
f 'c = 4000psi AT 28 DAYS
REINFORCING STEEL SHALL BE IN ACCORDANCE WITH ASTM A615, GRADE 60.
LAP SPLICES SHALL BE PER TABLE SHOWN ON THIS SHEET.

CONCRETE COVER
CONCRETE COVER FOR REINFORCING BARS SHALL BE AS FOLLOWS, BUT NOT LESS THAN ONE BAR DIAMETER:

FOOTINGS AND MATS FORMED AGAINST SOIL . . . . . 3"
CONCRETE IN CONTACT WITH SOIL, WEATHER OR WATER . . . . . 2"
CONCRETE NOT EXPOSED TO SOIL, WEATHER OR WATER. . . . . 1-1/2"
BEAMS AND COLUMNS (TO STIRRUPS) . . . . . 1-1/2"

SLAB ON GRADE
UNDER 6" THICK . . . . . AT SLAB CENTER
6" AND OVER . . . . . .AS SHOWN

ANCHOR BOLTS

ANCHOR BOLTS FOR BUILDING STRUCTURE SHALL CONFORM TO ASTM A307 HOT DIPPED GALVANIZED. SET ALL BOLTS BY TEMPLATE.

DRILLED-IN EXPANSION BOLTS

SHALL BE STAINLESS STEEL "KWIK BOLTS" BY HILTI CORP., OR APPROVED EQUAL. ICBO CERTIFICATION AND SPECIAL INSPECTION IS REQUIRED. MINIMUM SPACING SHALL BE 12 BOLT DIAMETERS AND MINIMUM EDGE DISTANCE 6 BOLT DIAMETERS UNLESS NOTED OTHERWISE.

BOLT DIAMETER (IN)	1/2	5/8	3/4	7/8	1
MIN EMBEDMENT IN STRUCTURAL CONCRETE (IN)	4	4	5	6	7

ADHESIVE / EPOXY ANCHORING SYSTEM

ANCHORS SHALL BE STAINLESS STEEL RODS COMPLYING TO ASTM A316. REINFORCING BARS AND RODS ANCHORED INTO EXISTING CONCRETE SHALL BE IN DRILLED HOLE WITH THREADED, CODE APPROVED, ADHESIVE ANCHORING MATERIALS. ICC-ES REPORTS ARE REQUIRED FOR USE IN CRACKED CONCRETE FOR WIND OR SEISMIC LOADING. MINIMUM EMBEDMENT IN STRUCTURAL CONCRETE SHALL BE 8 ROD DIAMETERS. MINIMUM EDGE DISTANCE 6 ROD DIAMETERS.

REINFORCED CONCRETE MASONRY

CONCRETE MASONRY UNITS (CMU)
MASONRY UNITS SHALL BE HOLLOW LOAD-BEARING, GRADE N-1 CONFORMING TO ASTM SPECIFICATION C90 WITH f 'm = 1500 psi.

MOTOR AND GROUT
MORTAR AND GROUT SHALL CONFORM TO THE REQUIREMENTS OF ASTM C270, TYPE S.

MORTAR SHALL DEVELOP A MINIMUM COMPRESSIVE STRENGTH OF 1800 psi AT 28 DAYS.

GROUT SHALL ATTAIN A MINIMUM COMPRESSIVE STRENGTH OF 2500 psi AT 28 DAYS. MAXIMUM AGGREGATE SIZE SHALL BE 3/8", WITH SLUMP BETWEEN 6" TO 9".

GROUT ALL BOND BEAMS, LINTELS AND VERTICAL CELLS CONTAINING REINFORCING STEEL. INSULATE ALL OTHER NON-REINFORCED CELLS OF EXTERIOR WALLS, UNLESS NOTED OTHERWISE.

REINFORCING STEEL SHALL BE PER ASTM A615, GRADE 60. LAP SPLICES SHALL BE PER LAP SPLICE TABLE.

TYPICAL WALL REINFORCING, UNLESS NOTED OTHERWISE:
VERTICAL: #6 @ 32" AND AT CORNERS, @ CENTERLINE OF WALL
HORIZONTAL: #9 WIRE JOINT REINF (GALVANIZED) @ 16" OC
OPENINGS: JAMBS- (1) #5 FULL HEIGHT OF WALL
HEAD & SILL- (1) #5 EXTEND 2'-0" PAST OPENING

SEE DRAWINGS FOR TOP OF WALL BOND BEAM & OTHER REINFORCING.
ALL BARS & WIRES SHALL LAP AT CORNERS AND INTERSECTIONS.
DO NOT WELD MASONRY REINFORCING STEEL.

STEEL

MATERIAL
SHAPES AND PLATES SHALL CONFORM TO . . . . . ASTM A992 (A572/50)
CHANNELS AND ANGLES . . . . . .ASTM A36
TUBES (HSS) SHALL CONFORM TO . . . . . ASTM A500, GRADE B OR C
PIPES SHALL CONFORM TO . . . . . .ASTM A53, GRADE B
HIGH STRENCTH BOLTS SHALL CONFORM TO . . . . . F3125 GRADE A325

HIGH STRENGTH BOLTS BEARING TYPE N UNLESS NOTED. TENSION LIMITED SLIP BOLTS BY DIRECT TENSION INDICATOR METHOD USING LOAD INDICATOR WASHERS INSTALLED PER MANUFACTURER'S INSTRUCTIONS OR BY TURN-OF-THE NUT METHOD.

MACHINE BOLTS SHALL BE ASTM A307.

WELDING
ALL WELDING SHALL CONFORM TO AWS D1.1 WELDING CODE. MINIMUM SIZE WELDS 3/16" CONTINUOUS FILLET.

ALL STEEL SHALL BE HOT DIP GALVANIZED AFTER FABRICATION UNLESS NOTED OTHERWISE.

WOOD

LUMBER: DOUGLAS FIR LARCH #2 OR BETTER GRADE

FASTENERS / CONNECTIONS NOT SPECIFICALLY CALLED OUT SHALL BE PER IBC TABLE 2304.9.1
CONNECTOR HARDWARE CALLOUTS ARE SIMPSON STRONG-TIE CO.
(CONNECTORS OF OTHER MANUFACTURES ARE ACCEPTABLE WITH ICC APPROVALS)

GLULAM BEAMS SHALL BE 2000psi MIN STRESS GRADE

ROOF NAILING: 10d @ 6" O.C. AT EDGES & SUPPORTS
NAILS SHALL BE HOT-DIP GALVANIZED

LAP SPLICE TABLE

BAR SIZE	CONCRETE f 'c = 4,000 OR 5,000 PSI	MASONRY f 'm = 1,500 PSI
#3	19"	13"
#4	25"	22"
#5	31"	35"
#6	37"	54"
#7	43"	63"
#8	49"	72"
#9	55"	NA
#10	62"	NA

MINIMUM LAP SPLICES UNLESS OTHERWISE DETAILED ON DRAWINGS

Call 811 two business days before you dig

SHEET 164 OF 226

BID SET

CAD NO.

NO.	REVISIONS	INT.	APP.	DATE

ACTION	BY	DATE
DESIGNED	JL	04/11/25
DRAWN	KT	04/11/25
CHECKED (FIELD)		
CHECKED (HDQTS.)		

JACOB WATSON JENKE
STATE OF WASHINGTON
56738
REGISTERED PROFESSIONAL ENGINEER
4/11/2025

REGISTERED STAMP

WASHINGTON STATE PARKS AND RECREATION COMMISSION

NISQUALLY STATE PARK

PHASE 3A MAINTENANCE BUILDING AND WWTF

GENERAL STRUCTURAL NOTES

B-S1.1

SCALE
NO SCALE

PARKS FILE#

U:\PSO\Projects\Clients\4763-RW Droll\216-4763-010 Nisqually PortKWWOptions\99Svcs\CAD\DWG\PS18062A-S1.1.dwg
Apr-11-25 10:16am

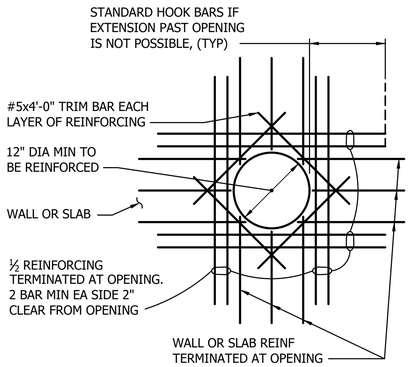

REINFORCING AROUND ROUND OPENING DETAIL

1 TYP NOT TO SCALE

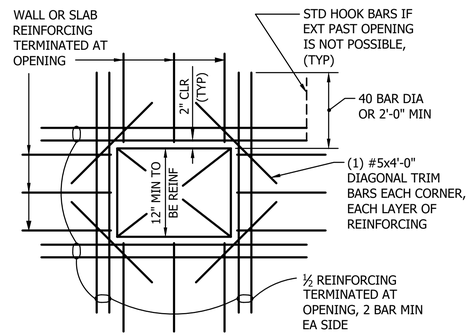

REINFORCING AROUND RECTANGULAR OPENING DETAIL

2 TYP NOT TO SCALE

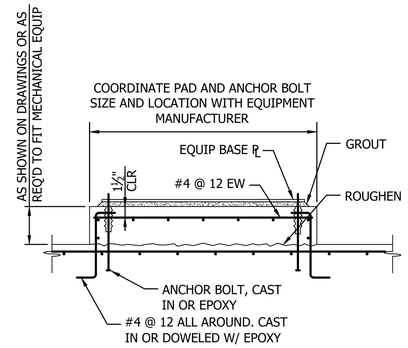

MECHANICAL & ELECTRICAL EQUIPMENT PAD DETAIL

3 TYP NOT TO SCALE

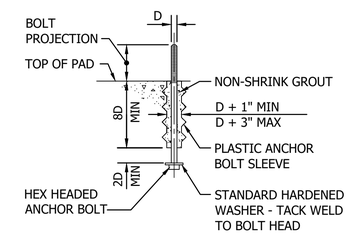

ANCHOR BOLT CAST-IN-PLACE DETAIL

4 TYP NOT TO SCALE

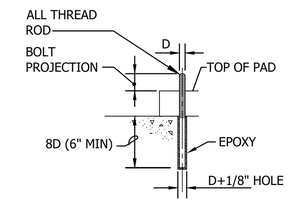

ANCHOR BOLT EPOXY DETAIL

5 TYP NOT TO SCALE

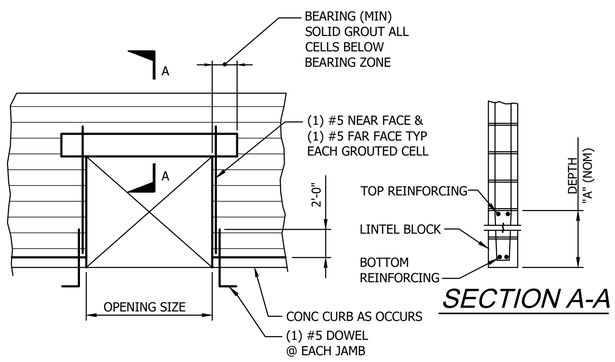

SECTION A-A

TYPICAL WALL ELEVATION

OPENING SIZE	"A" (NOM)	BOT. REINF.	TOP REINF.	BEARING (MIN)
TO 6'-1"	16"	1-#6	1-#6	8"
7'-0" TO 9'-11"	16"	2-#6	2-#6	8"
10'-0" TO 12'-0"	16"	2-#6	2-#6	16"

*OPENING LARGER THAN 12'-0" SEE DRAWINGS

LINTELS CONCRETE UNIT MASONRY DETAIL

6 TYP NOT TO SCALE

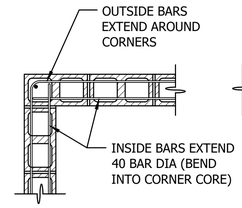

EXTERIOR BOND BEAM

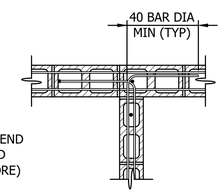

INTERIOR BOND BEAM

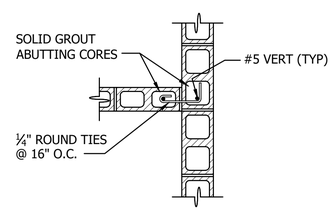

TEE INTERSECTION WALL

NOTE:

1. SIMILAR DETAILS FOR 6", 8", 10", & 12" WALLS.

CONCRETE UNIT MASONRY DETAIL

7 TYP NOT TO SCALE

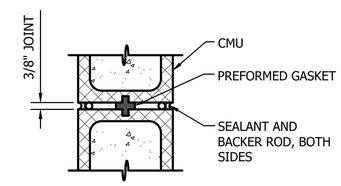

CONTROL JOINT DETAIL

8 TYP NOT TO SCALE

Call 811 two business days before you dig

SHEET 165 OF 226

BID SET

CAD NO.

	DATE	APP.	INT.	REVISIONS	NO.

ACTION	BY	DATE
DESIGNED	JL	04/11/25
DRAWN	KT	04/11/25
CHECKED (FIELD)		
CHECKED (HDQTS.)		

JACOB WATSON JENKE STATE OF WASHINGTON 56738 REGISTERED PROFESSIONAL ENGINEER 4/11/2025

REGISTERED STAMP

WASHINGTON STATE PARKS AND RECREATION COMMISSION

NISQUALLY STATE PARK

PHASE 3A MAINTENANCE BUILDING AND WWTF

STRUCTURAL DETAILS

B-S2.0

SCALE

NO SCALE

PARKS FILE#

U:\PSO\Projects\Clients\4763-RW Draft\216-4763-010 Nisqually Park WW Options\99Svcs\CADD\DWG\PS180620-S2.0.dwg
Apr-11-25 10:22am

NOTES:

1. SLOPE TRENCH DRAIN FROM NORTHWEST TO SOUTHEAST 1/4" PER FOOT MIN.

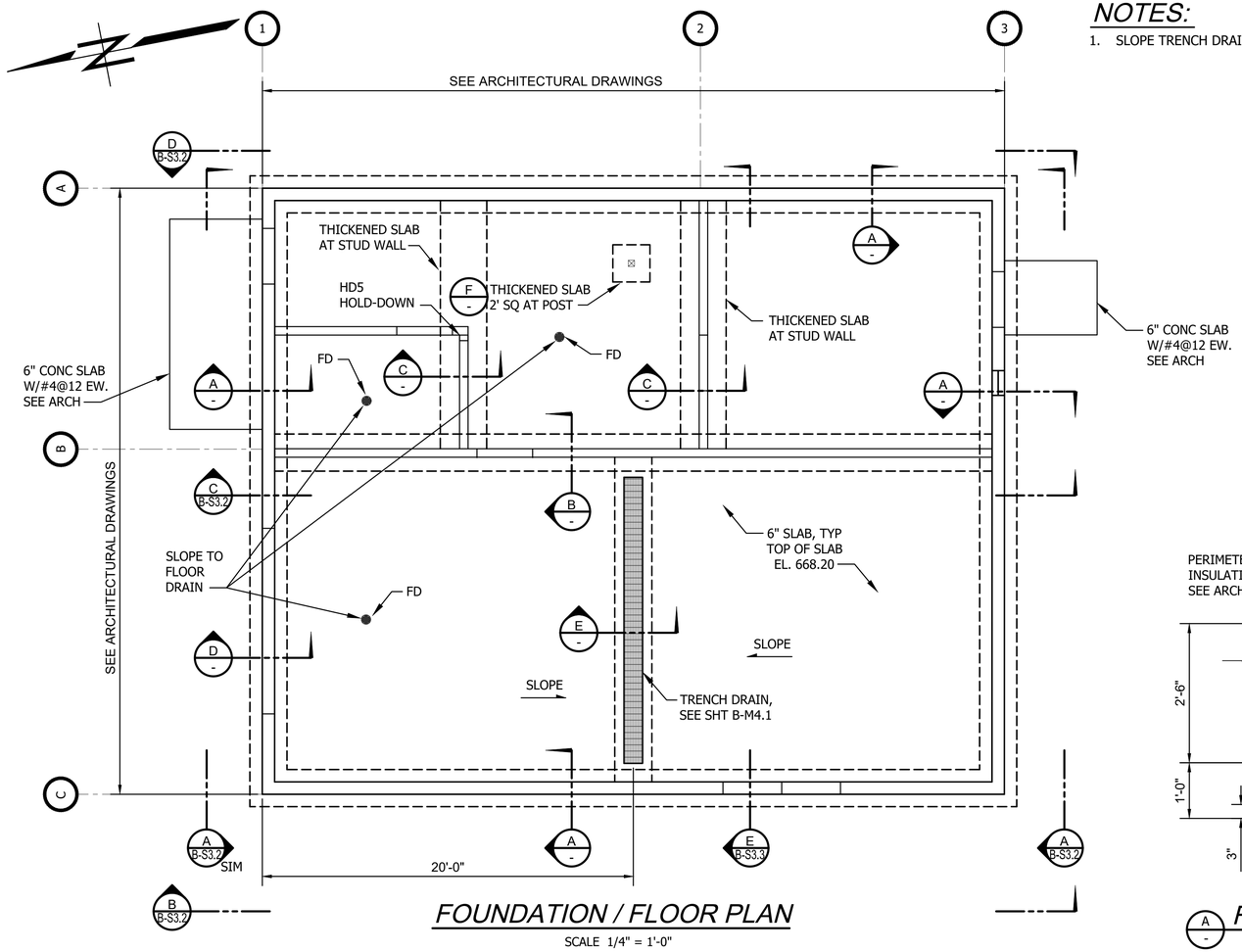

FOUNDATION / FLOOR PLAN

SCALE 1/4" = 1'-0"

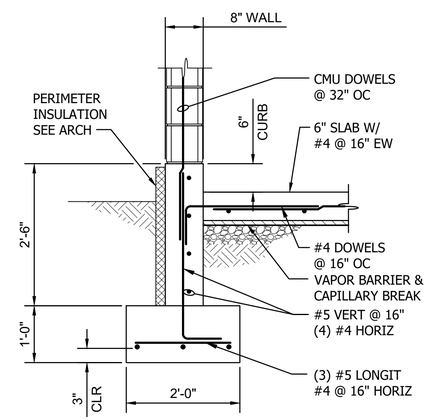

FOOTING SECTION

3/4" = 1'-0"

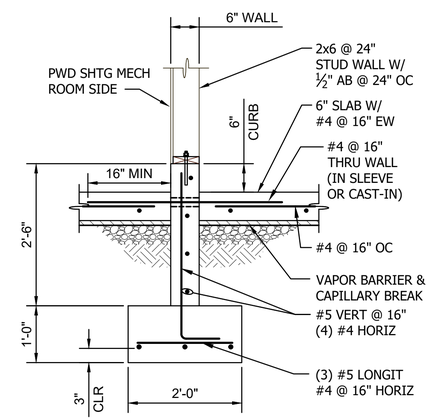

FOOTING SECTION

3/4" = 1'-0"

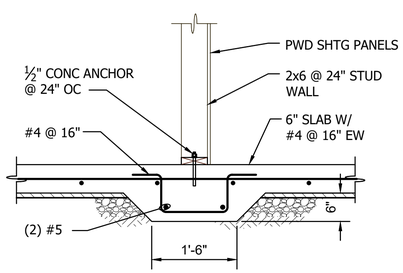

THICKENED SLAB SECTION

3/4" = 1'-0"

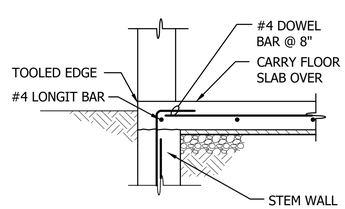

DOOR SECTION

3/4" = 1'-0"

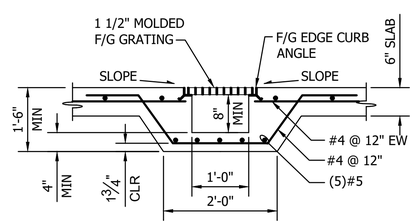

TRENCH DRAIN SECTION

3/4" = 1'-0"

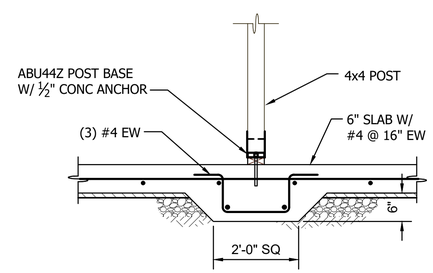

THICKENED SLAB @ STAIR SECTION

3/4" = 1'-0"

Call 811 two business days before you dig

SHEET 166 OF 226

BID SET

CAD NO.

	DATE	APP.	INT.	REVISIONS	NO.

ACTION	BY	DATE
DESIGNED	JL	04/11/25
DRAWN	KT	04/11/25
CHECKED (FIELD)		
CHECKED (HDQTS.)		

JACOB WATSON JENKE — STATE OF WASHINGTON — 56738 — REGISTERED PROFESSIONAL ENGINEER — 4/11/2025

REGISTERED STAMP

WASHINGTON STATE PARKS AND RECREATION COMMISSION

NISQUALLY STATE PARK

PHASE 3A MAINTENANCE BUILDING AND WWTF

BUILDING FLOOR & FOUNDATION PLAN AND SECTIONS

B-S3.0

SCALE

AS NOTED

PARKS FILE#

U:\PSO\Projects\Clients\4763-RW Droll\216-4763-010 Nisqually Park WW options\99Svcs\CADD\DWG\PS180620A-S3.0.dwg
Apr-11-25 10:21am

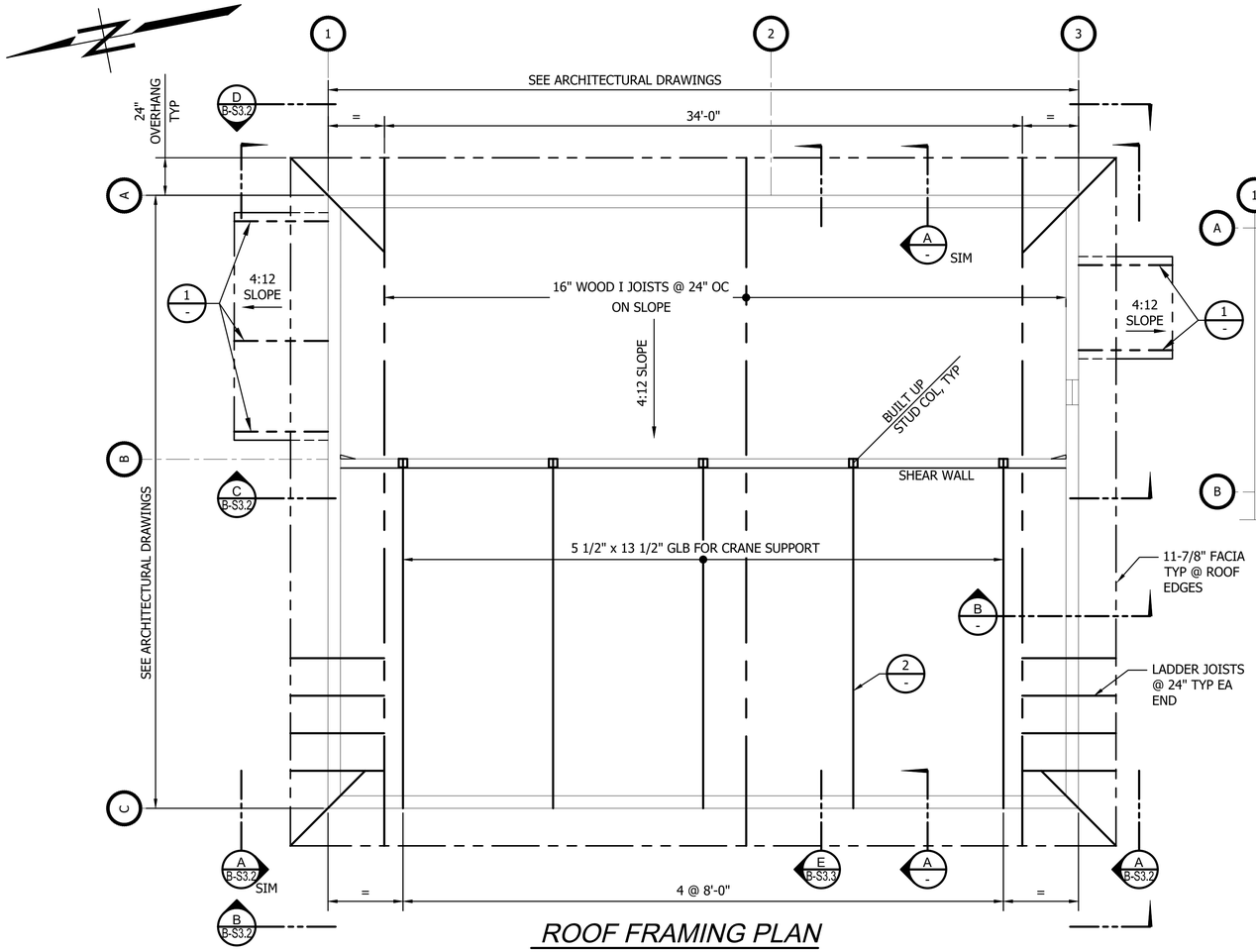

ROOF FRAMING PLAN

SCALE 1/4" = 1'

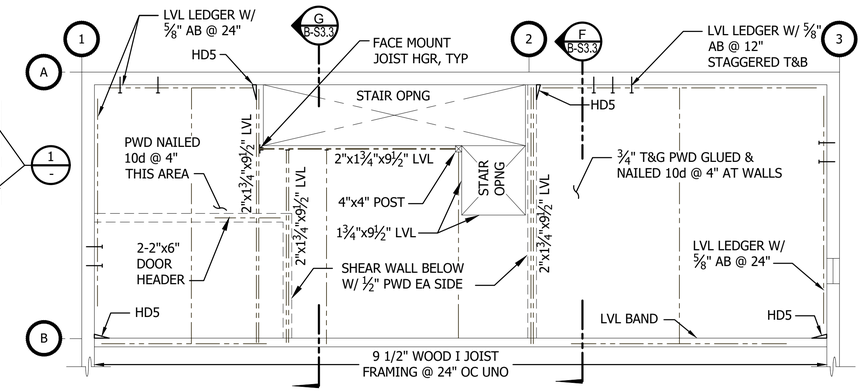

SECOND FLOOR FRAMING PLAN

SCALE 1/4" = 1'

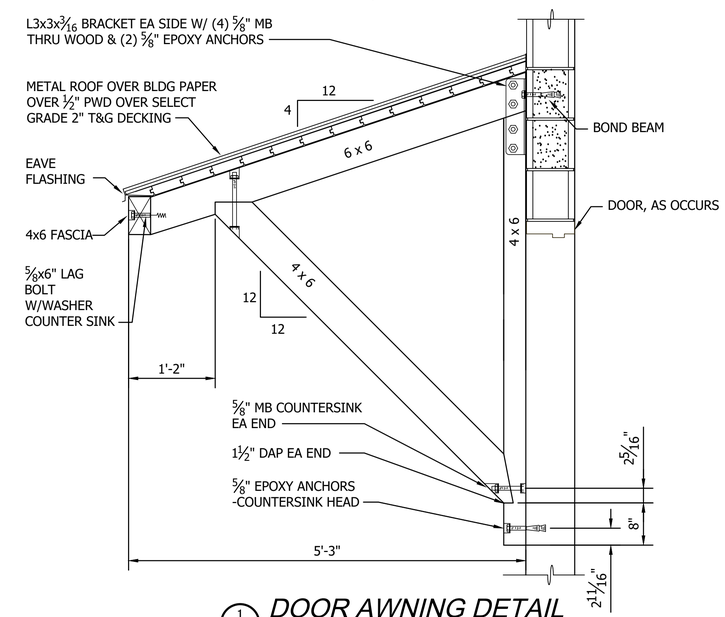

DOOR AWNING DETAIL

1" = 1'-0"

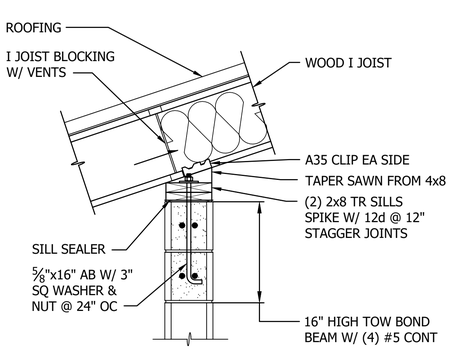

EAVE SECTION

1" = 1'-0"

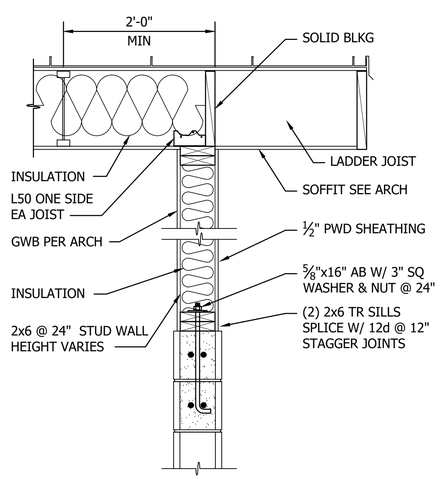

GABLE SECTION

1" = 1'-0"

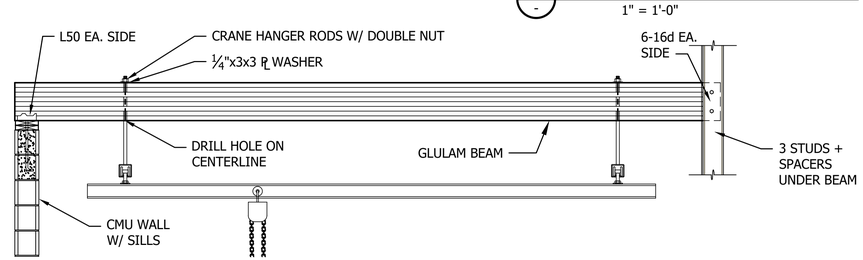

CRANE SUPPORT BEAM

1/2" = 1'-0"

Call 811 two business days before you dig

SHEET 167 OF 226

BID SET

CAD NO.

NO.	REVISIONS	INT.	APP.	DATE

ACTION	BY	DATE
DESIGNED	JL	04/11/25
DRAWN	KT	04/11/25
CHECKED (FIELD)		
CHECKED (HDQTS.)		

JACOB WATSON JENKE — STATE OF WASHINGTON — 56738 — REGISTERED PROFESSIONAL ENGINEER — 4/11/2025

REGISTERED STAMP

WASHINGTON STATE PARKS AND RECREATION COMMISSION

NISQUALLY STATE PARK

PHASE 3A MAINTENANCE BUILDING AND WWTF BUILDING ROOF & FRAMING PLANS, SECTIONS, AND DETAILS

B-S3.1

SCALE

AS NOTED

PARKS FILE#

U:\PSO\Projects\Clients\4763-RW Droll\216-4763-010 Nisqually\ParkWWOptions\995vcs\CADD\DWG\PS18062A-S3.1.dwg
Apr-11-25 10:20am

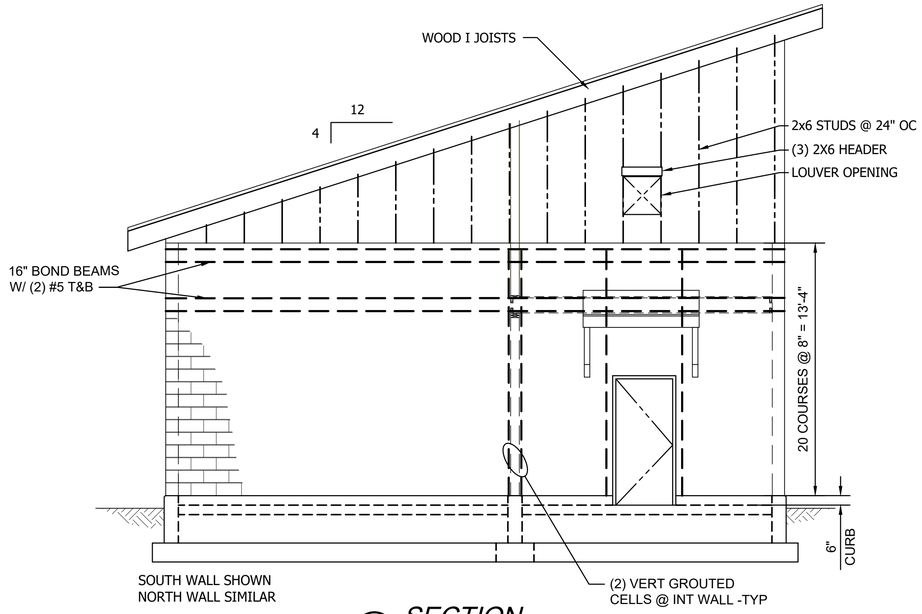

A B-S3.0 **SECTION**
1/4" = 1'-0"

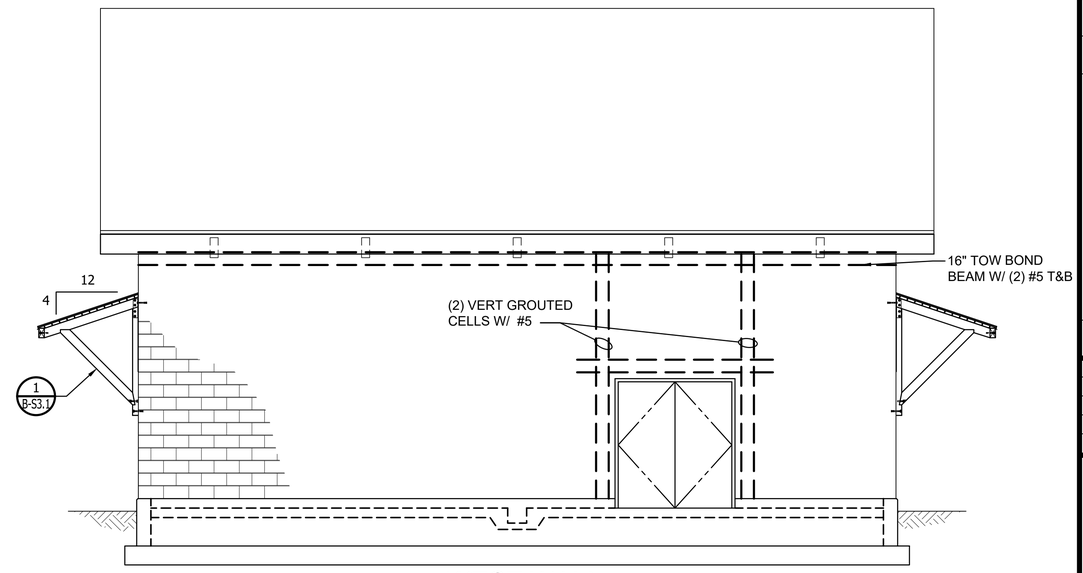

WEST WALL
B B-S3.0 **SECTION**
1/4" = 1'-0"

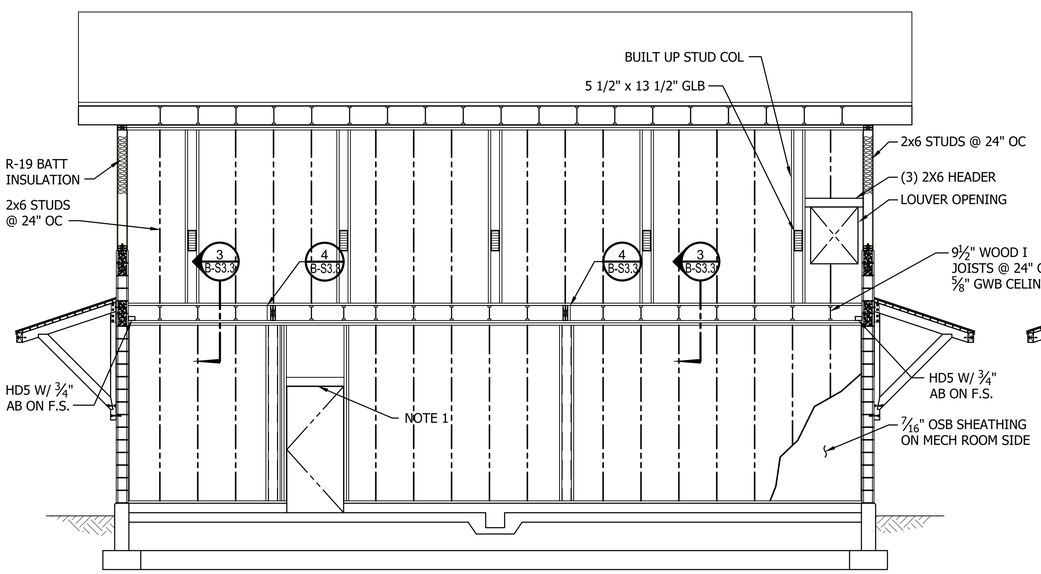

C B-S3.0 **SECTION**
1/4" = 1'-0"

NOTES:

1. (3) 2X6 DOOR HEADER WITH CRIPPLE STUDS.

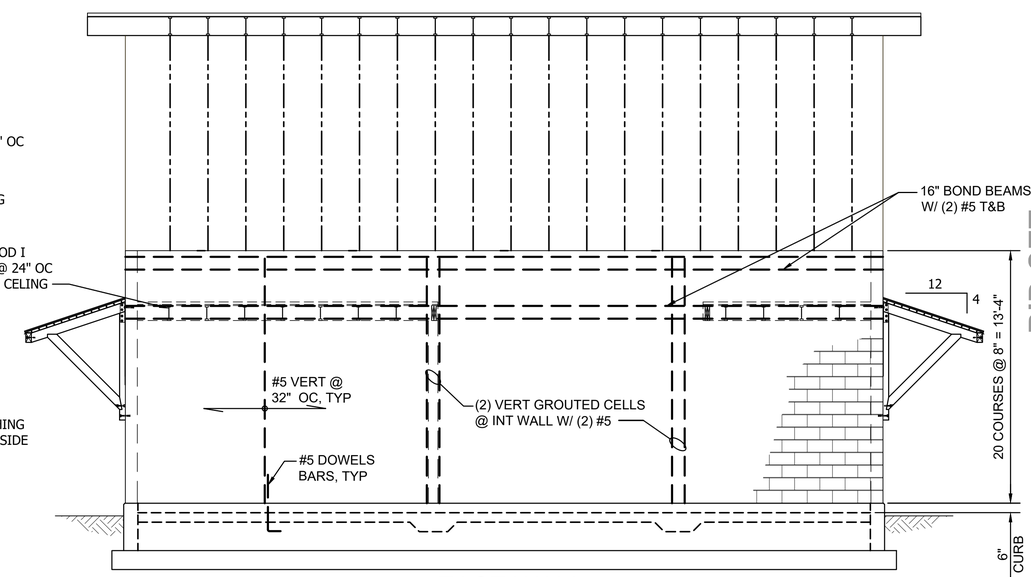

EAST WALL
D B-S3.0 **SECTION**
1/4" = 1'-0"

Call 811 two business days before you dig

SHEET 168 OF 226

BID SET

CAD NO.

NO.	REVISIONS	INT.	APP.	DATE

ACTION	BY	DATE
DESIGNED	JL	04/11/25
DRAWN	KT	04/11/25
CHECKED (FIELD)		
CHECKED (HDQTS.)		

JACOB WATSON JENKE
STATE OF WASHINGTON
56738
REGISTERED PROFESSIONAL ENGINEER
4/11/2025

REGISTERED STAMP

WASHINGTON STATE PARKS AND RECREATION COMMISSION

NISQUALLY STATE PARK

PHASE 3A MAINTENANCE BUILDING AND WWTF

BUILDING SECTIONS AND ELEVATIONS

B-S3.2

SCALE
AS NOTED

PARKS FILE#

U:\PSO\Projects\Clients\4763-RW Draft\216-4763-010 Nisqually Park WWOptions\99Svcs\CADD\DWG\PS180620-S3.2.dwg
Apr-11-25 10:40am

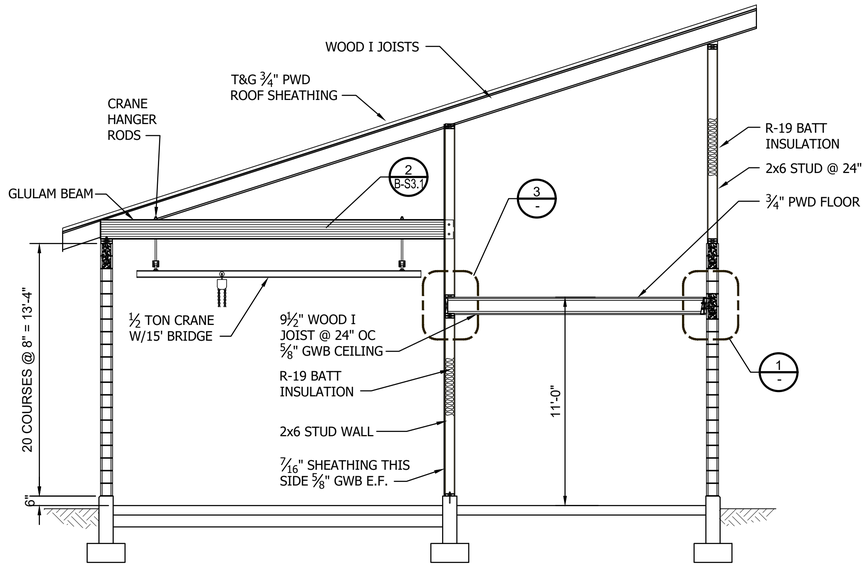

E B-S3.0 SECTION
1/4" = 1'-0"

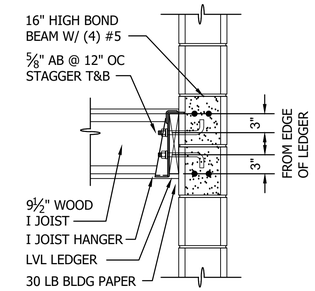

1 - DETAIL
1" = 1'-0"

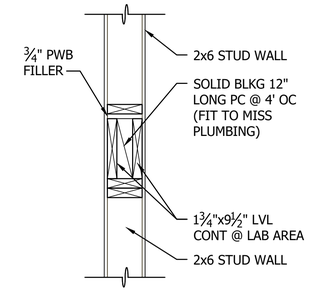

2 - DETAIL
1" = 1'-0"

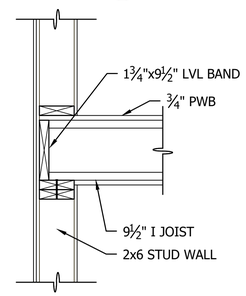

3 - DETAIL
1" = 1'-0"

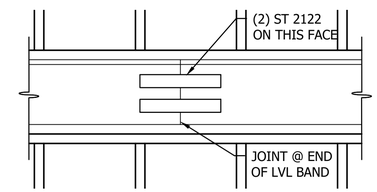

4 - DETAIL
1" = 1'-0"

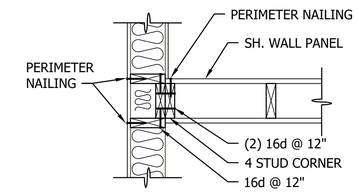

5 - DETAIL
1" = 1'-0"

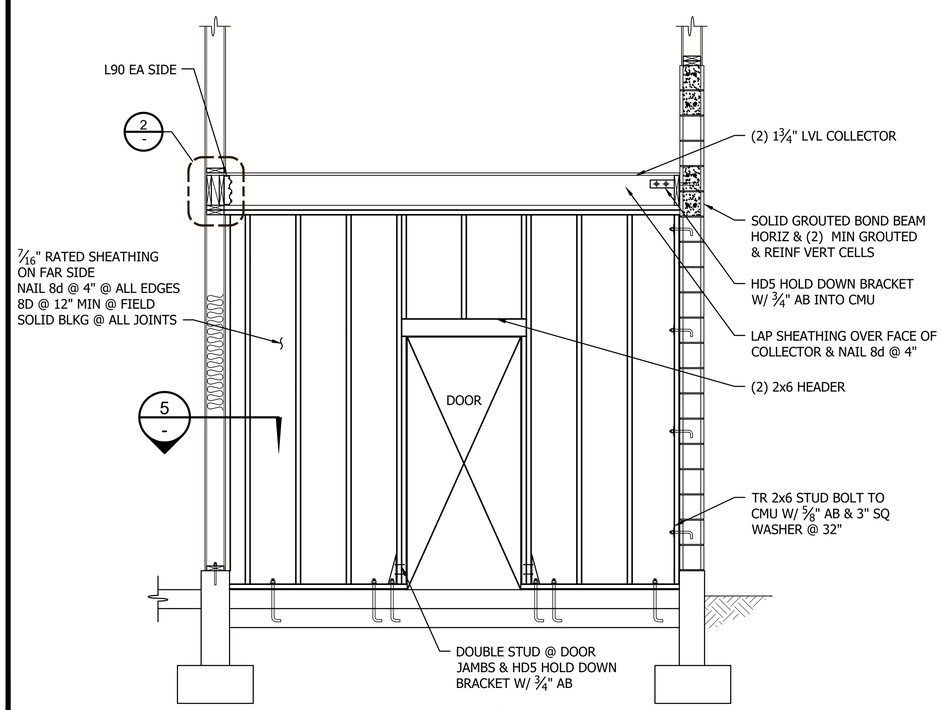

F B-S3.1 SECTION
1/2" = 1'-0"

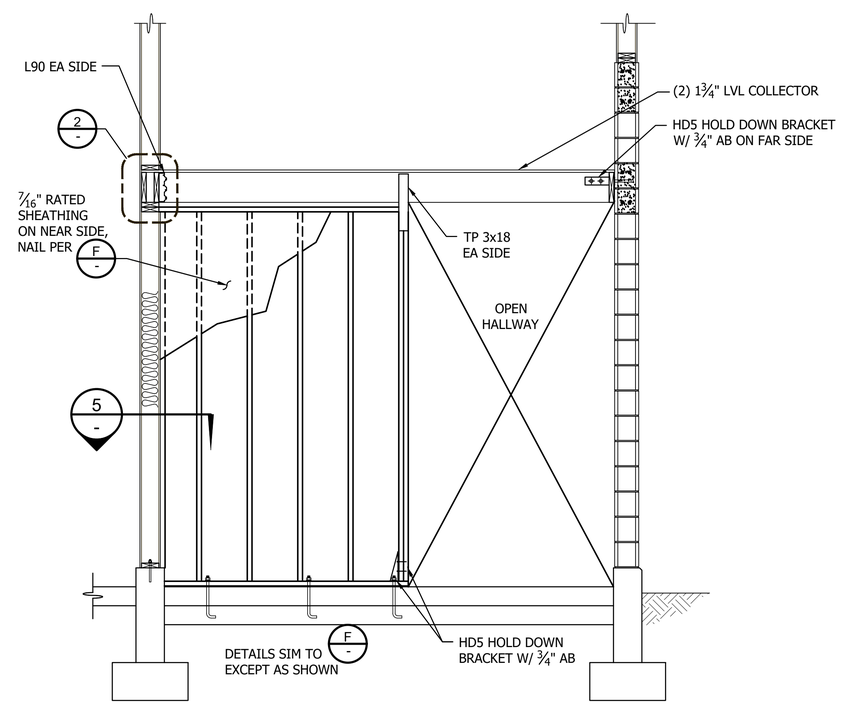

G B-S3.1 SECTION
1/2" = 1'-0"

BID SET

Call 811 two business days before you dig

SHEET 169 OF 226

CAD NO.

NO.	REVISIONS	INT.	APP.	DATE

ACTION	BY	DATE
DESIGNED	JL	04/11/25
DRAWN	KT	04/11/25
CHECKED (FIELD)		
CHECKED (HDQTS.)		

JACOB WATSON JENKE
STATE OF WASHINGTON
56738
REGISTERED PROFESSIONAL ENGINEER
4/11/2025

REGISTERED STAMP

WASHINGTON STATE PARKS AND RECREATION COMMISSION

NISQUALLY STATE PARK

PHASE 3A MAINTENANCE BUILDING AND WWTF

BUILDING SECTIONS AND DETAILS

B-S3.3

SCALE
AS NOTED

PARKS FILE#

U:\PSO\Projects\Clients\4763-RW Draft\216-4763-010 Nisqually Park WWOptions\99Svcs\CADD\DWG\PS180620-S3.3.dwg
Apr-11-25 10:23am

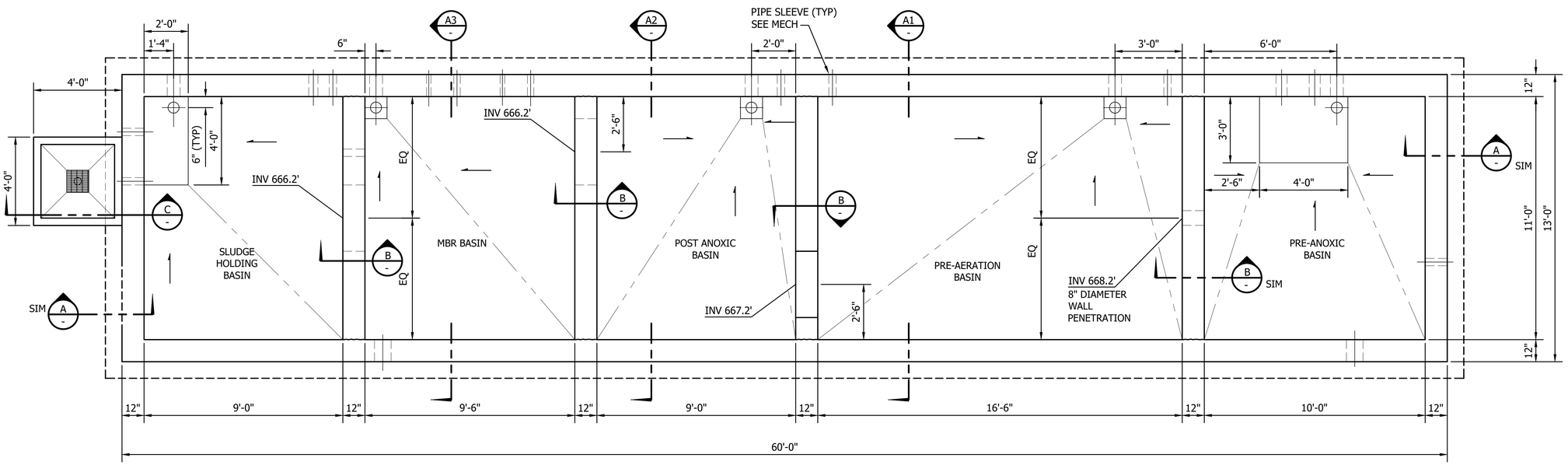

MBR TANK

SCALE 3/8" = 1'

NOTES:

1. CONTRACTOR TO REVIEW MECHANICAL DRAWING SHEETS AND KUBOTA MBR MECHANICAL DRAWING SHEETS TO LOCATE MBR TANK WALL SLEEVES.

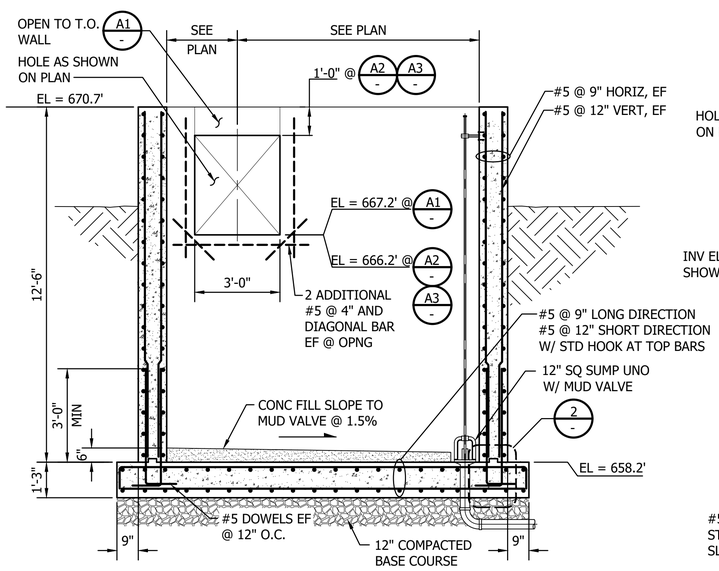

SECTION

SCALE 3/8" = 1'

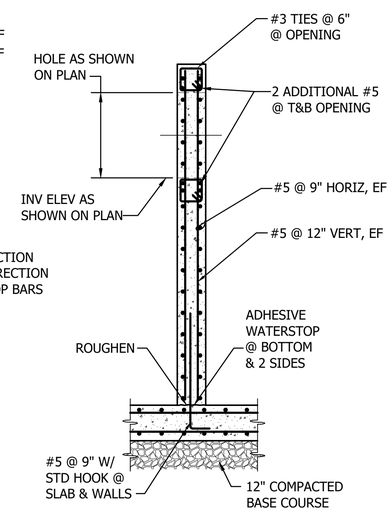

SECTION

SCALE 3/8" = 1'

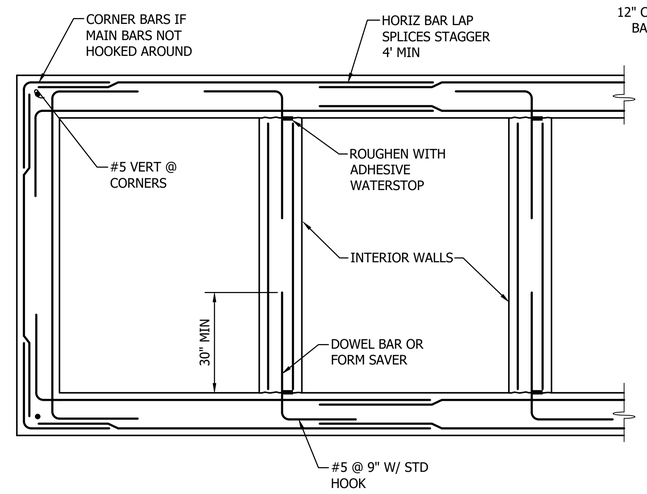

HORIZONTAL BAR DETAIL

NO SCALE

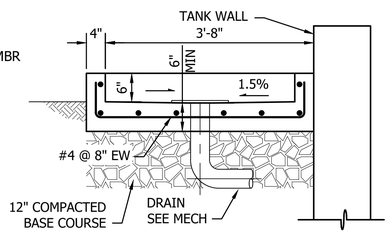

SECTION

SCALE 3/4" = 1'

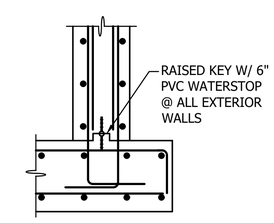

WATERSTOP DETAIL

SCALE 3/4" = 1'

BID SET

Call 811 two business days before you dig

SHEET 170 OF 226

CAD NO.

REVISIONS	DATE	APP.	INT.

ACTION	BY	DATE
DESIGNED	JL	04/11/25
DRAWN	KT	04/11/25
CHECKED (FIELD)		
CHECKED (HDQTS.)		

JACOB WATSON JENKE — STATE OF WASHINGTON — 56738 — REGISTERED PROFESSIONAL ENGINEER — 4/11/2025

REGISTERED STAMP

WASHINGTON STATE PARKS AND RECREATION COMMISSION

NISQUALLY STATE PARK

PHASE 3A MAINTENANCE BUILDING AND WWTF

TANK PLAN, SECTIONS, AND DETAILS

B-S4.0

SCALE

AS NOTED

PARKS FILE#

U:\PSO\Projects\Clients\4763-RW Draft\216-4763-010 Nisqually Park WW Options\99Svcs\CADD\DWG\PS180620A-S4.0.dwg
Apr-11-25 10:31am

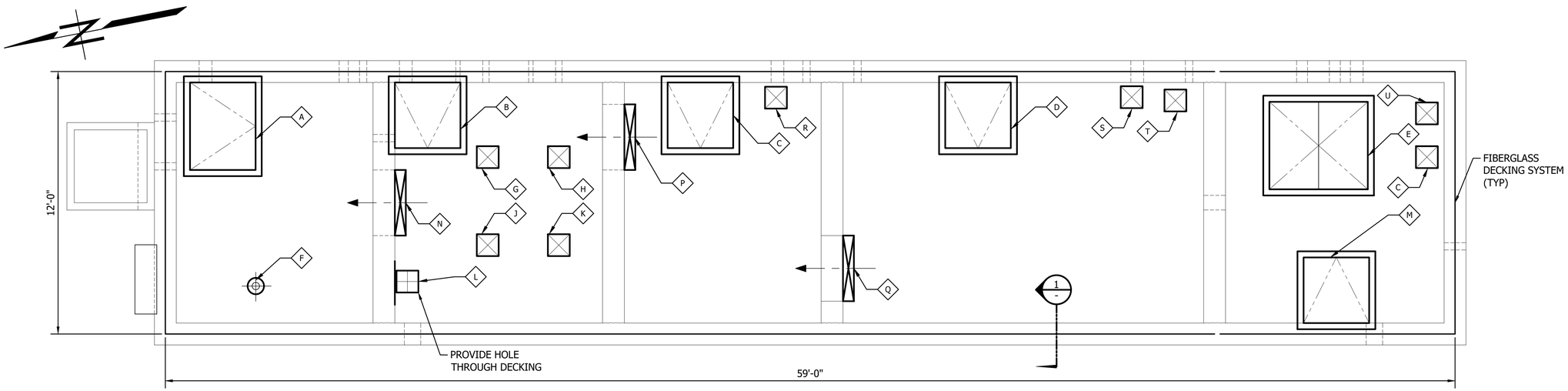

MBR TANK COVER PLAN

SCALE 3/8" = 1'

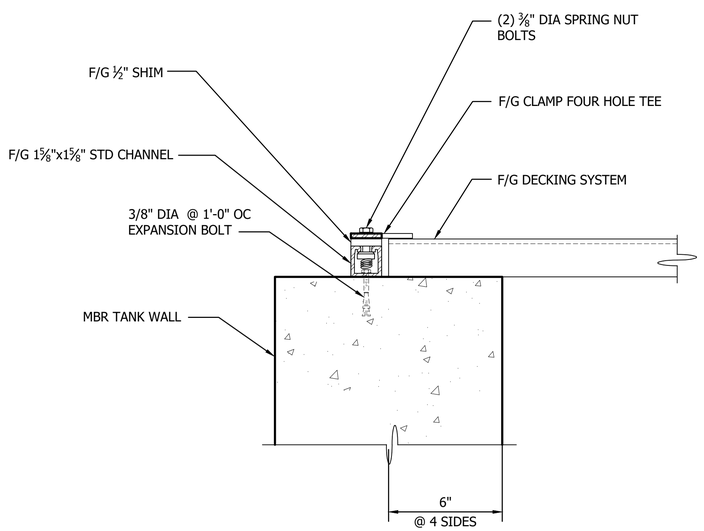

1 - SUGGESTED COVER ATTACHMENT DETAIL

SCALE 3" = 1'

MBR TANK COVER ACCESS HATCH SCHEDULE

MARK	SIZE	OPENING	MATERIAL	SERVICE
A	36"X48"	SINGLE LEAF	FRP	SLUDGE HOLDING BASIN PUMP P01-040
B	36"x36"	SINGLE LEAF	FRP	UNKNOWN PUMP
C	36"x36"	SINGLE LEAF	FRP	SUBMERSIBLE MIXER
D	36"x36"	SINGLE LEAF	FRP	SUBMERSIBLE MIXER
E	54"X48"	DOUBLE LEAF	FRP	PRE-ANOXIC BASIN PUMPS 1&2
F	4" DIA	FLANGE - 6" PROJECTION MIN.	PVC	ODOR CONTROL 150 LB
G	12"x12"	HAND HOLE	FRP	MEMBRANE VIEWING
H	12"X12"	HAND HOLE	FRP	MEMBRANE VIEWING
J	12"x12"	HAND HOLE	FRP	MEMBRANE VIEWING
K	12"x12"	HAND HOLE	FRP	MEMBRANE VIEWING
L	12"x12"	OPEN HOLE W/FLASHING	EDPM	CONTROL VALVE ACCESS ACV-0501
M	36"x36"	SINGLE LEAF	FRP	SUBMERSIBLE MIXER
N	AS REQD	FLASHING	EDPM	STOP GATE ACCESS
P	AS REQD	FLASHING	EDPM	STOP GATE ACCESS
Q	AS REQD	FLASHING	EDPM	STOP GATE ACCESS
R	12"x12"	HAND HOLE	FRP	6" MUD VALVE OPERATOR
S	12"x12"	HAND HOLE	FRP	6" MUD VALVE OPERATOR
T	12"x12"	HAND HOLE	FRP	AE-0302 ACCESS
U	12"x12"	HAND HOLE	FRP	AE-0210 ACCESS
V	12"x12"	HAND HOLE	FRP	LE-0204 ACCESS

NOTES:

1. ALL HATCH HARDWARE SHALL BE 316 STAINLESS STEEL.
2. CONTRACTOR SHALL VERIFY ALL MECHANICAL EQUIPMENT LOCATIONS PRIOR TO INSTALLATION OF ACCESS HATCHES.
3. CONTRACTOR SHALL LOCATE PUMP ACCESS HATCHES PER PUMP MANUFACTURES RECOMMENDATIONS.
4. F/G SUPPORT BEAMS SHALL BE SUPPLIED BY COVER MANUFACTURER AS INDICATED IN SPECIFICATION 067500.

HATCH LEGEND:

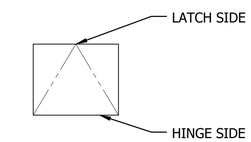

HINGED HATCH

OPENING THROUGH COVER

LIFT OFF ACCESS HATCH

NOZZLE PENETRATION

Call 811 two business days before you dig

BID SET

SHEET 171 OF 226

CAD NO.

	DATE	APP.	INT.	REVISIONS	NO.

ACTION	BY	DATE
DESIGNED	JL	04/11/25
DRAWN	KT	04/11/25
CHECKED (FIELD)		
CHECKED (HDQTS.)		

JACOB WATSON JENKE
STATE OF WASHINGTON
56738
REGISTERED PROFESSIONAL ENGINEER
4/11/2025

REGISTERED STAMP

WASHINGTON STATE PARKS AND RECREATION COMMISSION

NISQUALLY STATE PARK

PHASE 3A MAINTENANCE BUILDING AND WWTF

MBR TANK COVER PLANS AND DETAILS

B-S4.1

SCALE

AS NOTED

PARKS FILE#

U:\PSO\Projects\Clients\4763-RW Draft\216-4763-010 Nisqually Park WW Options\99Svcs\CADD\DWG\PS180620A-S4.1.dwg
Apr-11-25 10:29am

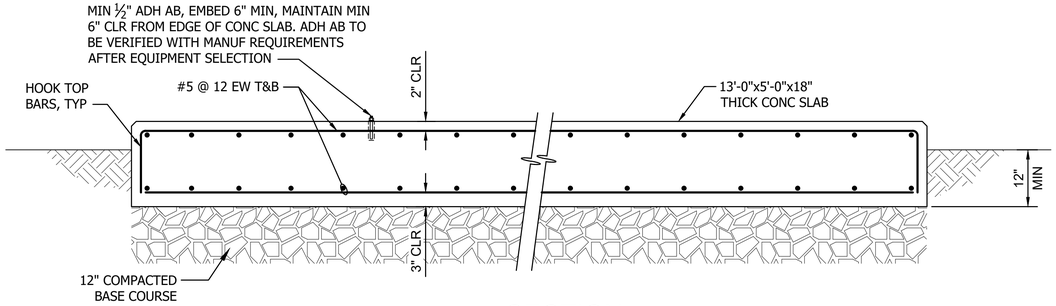

SECTION

EMERGENCY GENERATOR SLAB DETAIL

1 / -

3/4" = 1'-0"

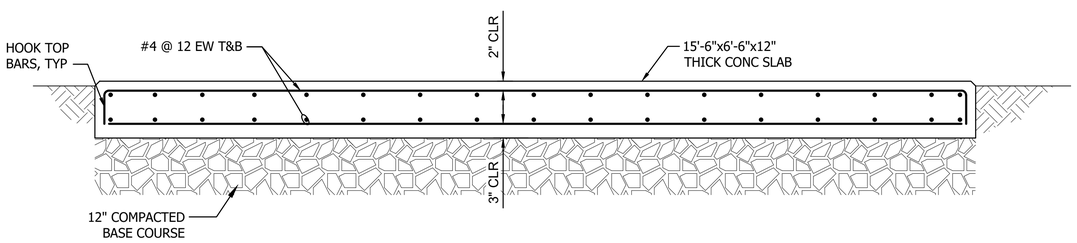

SECTION

ODOR CONTROL SLAB DETAIL

2 / -

3/4" = 1'-0"

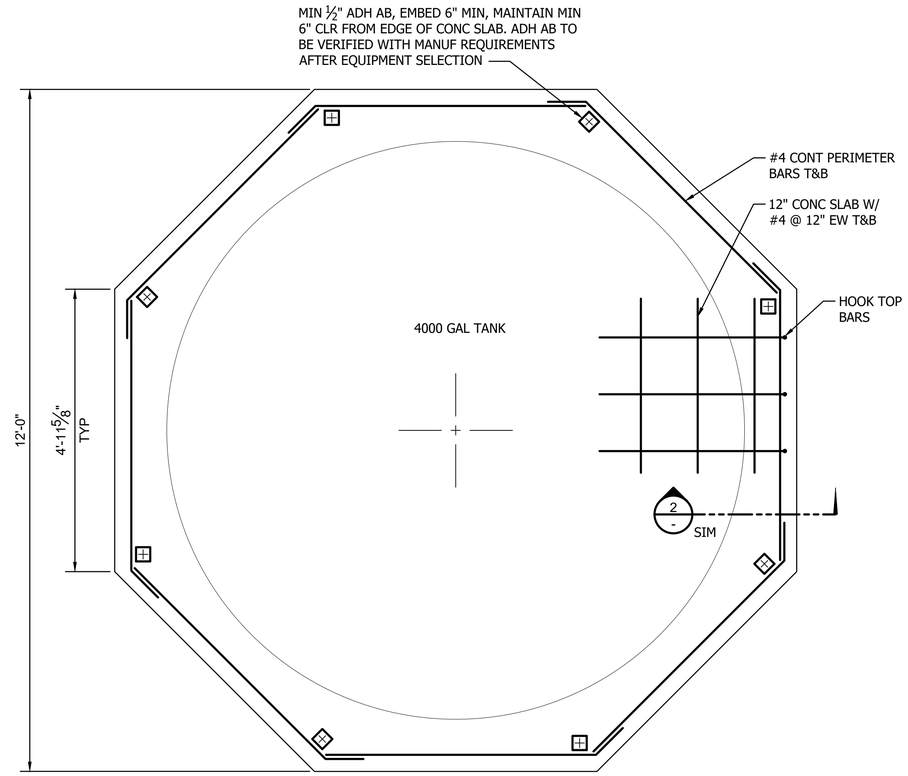

PLAN

EFFLUENT STORAGE TANK SLAB DETAIL

3 / -

3/4" = 1'-0"

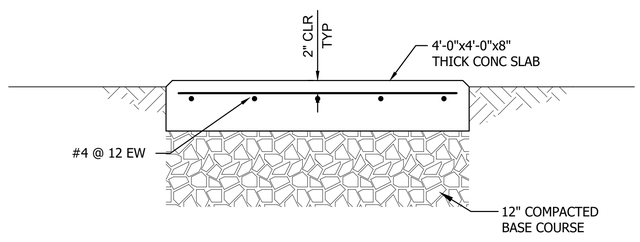

SECTION

AUTO SAMPLER AND ENCLOSURE SLAB DETAIL

4 / -

1" = 1'-0"

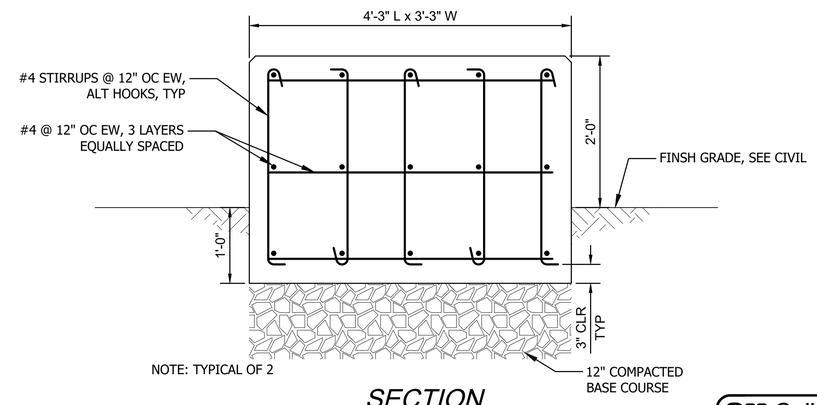

SECTION

SCREENS MOUNT SLAB DETAIL

5 / -

1" = 1'-0"

Call 811 two business days before you dig

SHEET 172 OF 226

BID SET

CAD NO.

NO.	REVISIONS	INT.	APP.	DATE

ACTION	BY	DATE
DESIGNED	JL	04/11/25
DRAWN	KT	04/11/25
CHECKED (FIELD)		
CHECKED (HDQTS.)		

JACOB WATSON LINKE · STATE OF WASHINGTON · 56738 · REGISTERED PROFESSIONAL ENGINEER

4/11/2025

REGISTERED STAMP

WASHINGTON STATE PARKS AND RECREATION COMMISSION

NISQUALLY STATE PARK

PHASE 3A MAINTENANCE BUILDING AND WWTF

EQUIPMENT FOUNDATIONS

B-S5.0

SCALE

AS NOTED

PARKS FILE#

U:\PSO\Projects\Clients\4763-RW Droll\216-4763-010 Nisqually Park WWOptions\99Svcs\CADD\DWG\PS180620A-S5.0.dwg
Apr-11-25 10:36am

ABBREVIATIONS:

AFF	ABOVE FINISH FLOOR
AL	ALUMINUM
ASSY	ASSEMBLY
ARV	AIR RELEASE VALVE
BF	BUTTERFLY VALVE
BOD	BOTTOM OF DUCT
BR	BRINE SOLUTION
CFM	CUBIC FEET PER MINUTE
CL	CHLORINE, CLASS, CENTER LINE
CLR	CLEAR, CLEARANCE
CLS	CHLORINE SOLUTION (HYPOCHLORITE)
CO	COUNTY, CLEANOUT
COL	COLUMN
CONC	CONCRETE
CONT	CONTINUE, CONTINUOUS
CSBC	CRUSHED SURFACING BASE COURSE
D	DRAIN, DRAINAGE
DP	DIFFERENTIAL PRESSURE
E	EXISTING
EHG	ELECTROLYTIC HYPOCHLORITE GENERATOR
EL	ELEVATION
ELEV	ELEVATION
EPDM	ETHYLENE PROPYLENE DIENE MONOMER
EW	EACH WAY
EX	EXISTING
FC	FLEXIBLE CONNECTION
FD	FLOOR DRAIN
FLG	FLANGE, FLANGED
FRP	FIBERGLASS REINFORCED PLASTIC
GA	GAGE
GALV	GALVANIZED
GV	GATE VALVE
HDG	HOT DIPPED GALVANIZED
HDPE	HIGH DENSITY POLYETHYLENE
HTP	HEAT PUMP
HYD	HYDRAULIC
ID	INSIDE DIAMETER
IE	INVERT ELEVATION
L	LEFT
LI	LEVEL INDICATOR
LS	LEVEL SWITCH
MAX	MAXIMUM
MBR	MEMBRANE BIOLOGICAL REACTOR
MIN	MINIMUM, MINUTE
MJ-R	MECHANICAL JOINT-RESTRAINED
N.C.	NORMALLY CLOSED
N.O.	NORMALLY OPEN
NOM	NOMINAL
NPT	NATIONAL PIPE THREAD
OC	ON CENTER
OPP	OPPOSITE
PERF	PERFORATE, PERFORATED
PI	PRESSURE INDICATOR
PT	POINT
PVC	POLYVINYL CHLORIDE
PW	POTABLE WATER
R	RIGHT, RADIUS
RG	RETURN GRILL
ROW	RIGHT OF WAY
S	SLOPE
SCH	SCHEDULE
SED	SEDIMENTATION
SF	SUPPLY FAN
SG	SLUICE GATE, SUPPLY GRILL
SIM	SIMILAR
SKT	SOCKET THREAD
SL	SLIP
SOG	SLAB ON GRADE
STA	STATION
STD	STANDARD
SQ	SQUARE
SR	STATE ROUTE, SUPPLY REGISTER
SST	STAINLESS STEEL
SV	SOLENOID VALVE
SW	SOFTENED WATER
TI	TEMPERATURE INDICATOR
TM	TURBIDITY MONITOR
TOC	TOP OF CONCRETE, TOP OF CURB
TOD	TOP OF DUCT
TOW	TOP OF WALL
TYP	TYPICAL
UH	UNIT HEATER
V	VALVE, VENT, VOLT
VIC	VICTAULIC
VTR	VENT THROUGH ROOF
W/	WITH

PIPING SYSTEM

SYMBOL	SERVICE
CHF	CHEMICAL FEED
CLS	CHLORINE SOLUTION
D	DRAINAGE
FD	FLOOR DRAIN
FM	FORCE MAIN
NPW	NON-POTABLE WATER
OA	ODOROUS AIR
PA	PROCESS AIR
PE	PERMEATE
SD	STORM SEWER
SS	SANITARY SEWER
SSFM	SANITARY SEWER FORCE MAIN
W	POTABLE WATER
V	VENT

PIPING DESIGNATIONS:

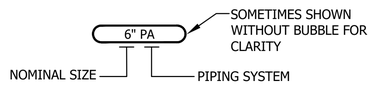

DETAIL AND SECTION DESIGNATION

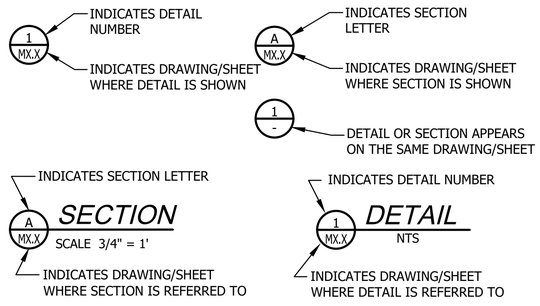

GENERAL NOTES:

1. THIS IS A STANDARD LEGEND, THEREFORE NOT ALL OF THIS INFORMATION MAY BE USED ON THIS PROJECT. CONTACT THE ENGINEER FOR SYMBOLS, LEGENDS AND ABBREVIATIONS NOT LISTED. EACH DISCIPLINE HAS A SPECIFIC LEGEND.

PIPE AND FITTING SYMBOLS:

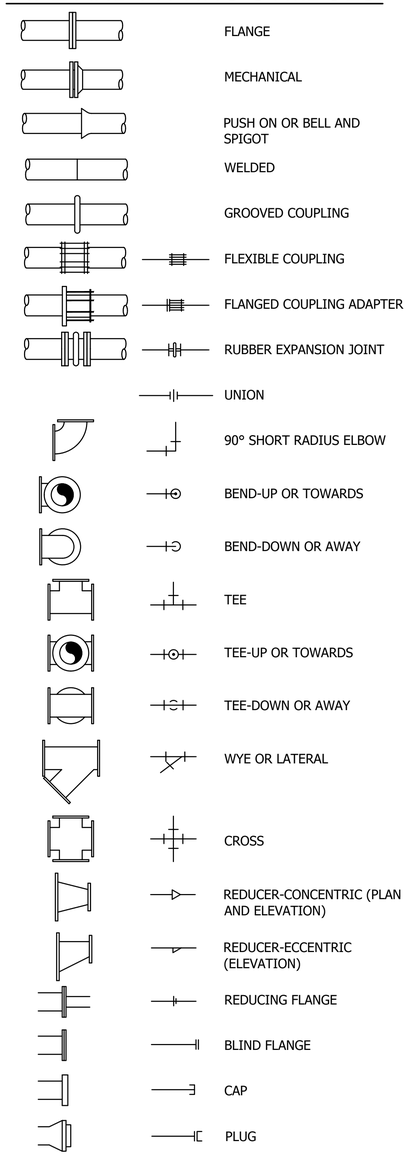

VALVE SYMBOLS:

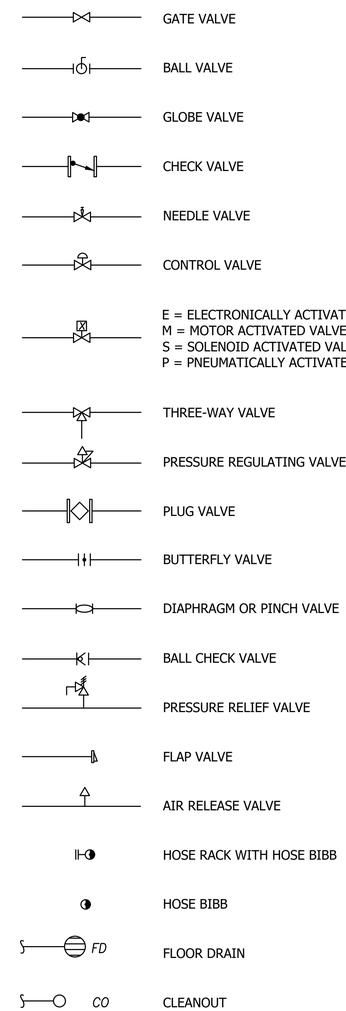

HVAC LEGEND:

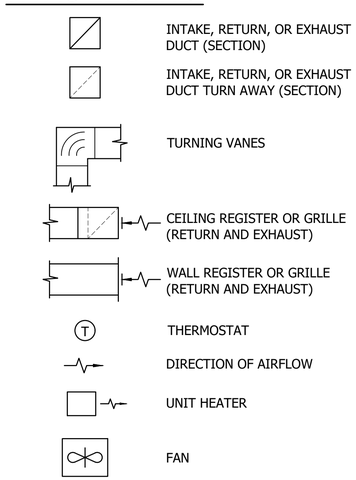

BID SET

Call 811 two business days before you dig

SHEET 173 OF 226

CAD NO.

	DATE	APP.	INT.	REVISIONS	NO.

ACTION	BY	DATE
DESIGNED	KT	04/11/25
DRAWN	KT	04/11/25
CHECKED (FIELD)		
CHECKED (HDQTS.)		

BRIAN E BUNKER
STATE OF WASHINGTON
46055
REGISTERED PROFESSIONAL ENGINEER
4/11/2025

REGISTERED STAMP

WASHINGTON STATE PARKS AND RECREATION COMMISSION

NISQUALLY STATE PARK

PHASE 3A MAINTENANCE BUILDING AND WWTF

MECH PIPING SYMBOLS, NOTES AND ABBREVIATIONS

B-M1.0

SCALE

NO SCALE

PARKS FILE#

U:\PSO\Projects\Clients\4763-RW Droll\216-4763-010 Nisqually ParkWWOptions\99Svcs\CADD\DWG\PS18062A-M1.0.dwg
Apr-11-25 9:17am

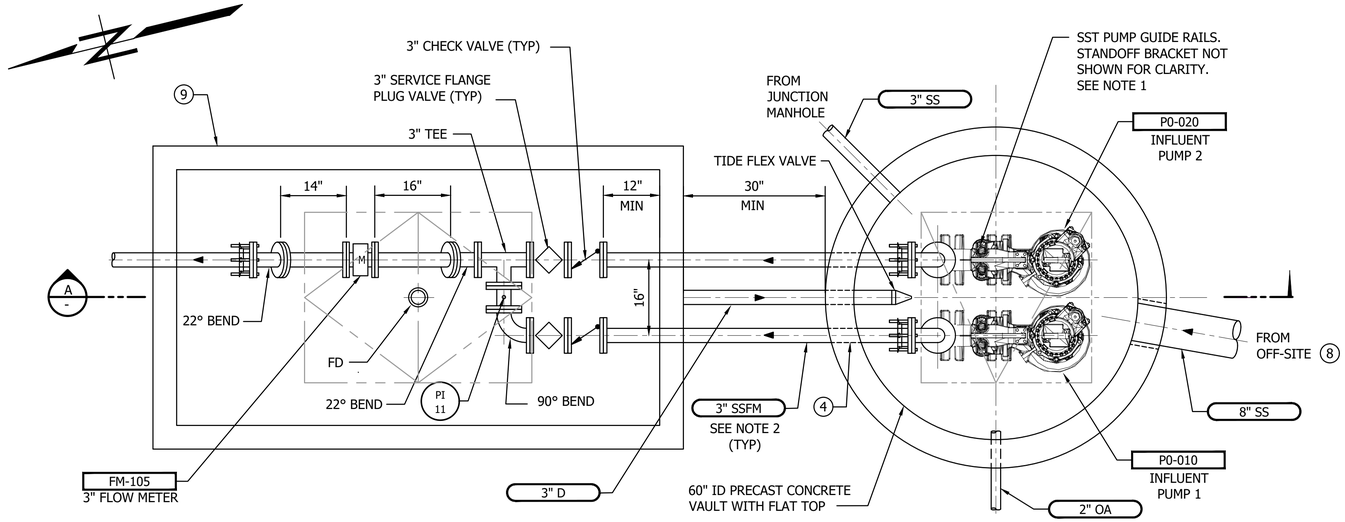

INFLUENT PUMP STATION PLAN

SCALE 3/4" = 1'-0"

NOTES:

1. LOCATE PUMP GUIDES AND DISCHARGE PIPING IN ACCORDANCE WITH PUMP MANUFACTURER MINIMUM CLEARANCES.
2. WATER LEVEL CONTROL FLOATS (QTY 4) AND LEVEL TRANSMITTER TO BE PLACED THE SAME DISTANCE ABOVE SUMP FLOOR AS SHOWN ON M2.1 MBR FEED PUMP STATION.
3. CONTRACTOR SHALL ENSURE PUMPS CLEAR HATCH OPENING WHEN REMOVING PUMPS.
4. CONTRACTOR SHALL CORE DRILL PIPE PENETRATION OPENINGS. SEAL PIPE PENETRATIONS WITH MODULAR SEAL AS SHOWN IN DETAIL 4 ON SHEET M3.5.
5. CONTRACTOR TO VERIFY DIMENSIONS, ELEVATIONS, AND LOCATIONS PRIOR TO CONSTRUCTION.
6. ALL JOINTS AND COUPLINGS SHALL BE RESTRAINED.
7. ALL EXPOSED STEEL AND HARDWARE IN WET WELL SHALL BE 316L STAINLESS STEEL.
8. CONTRACTOR TO FIELD VERIFY CONNECTION REQUIRED TO 8" INFLUENT.
9. VALVE VAULT- OLDCASTLE 4686-LA OR APPROVED EQUAL.
10. TIDE FLEX VALVE AND INVERT MUST BE AT LEAST 6" ABOVE HIGHWATER ALARM. USE TIDE FLEX VALVE SERIES TF-2, TF-35 OR APPROVED EQUAL.

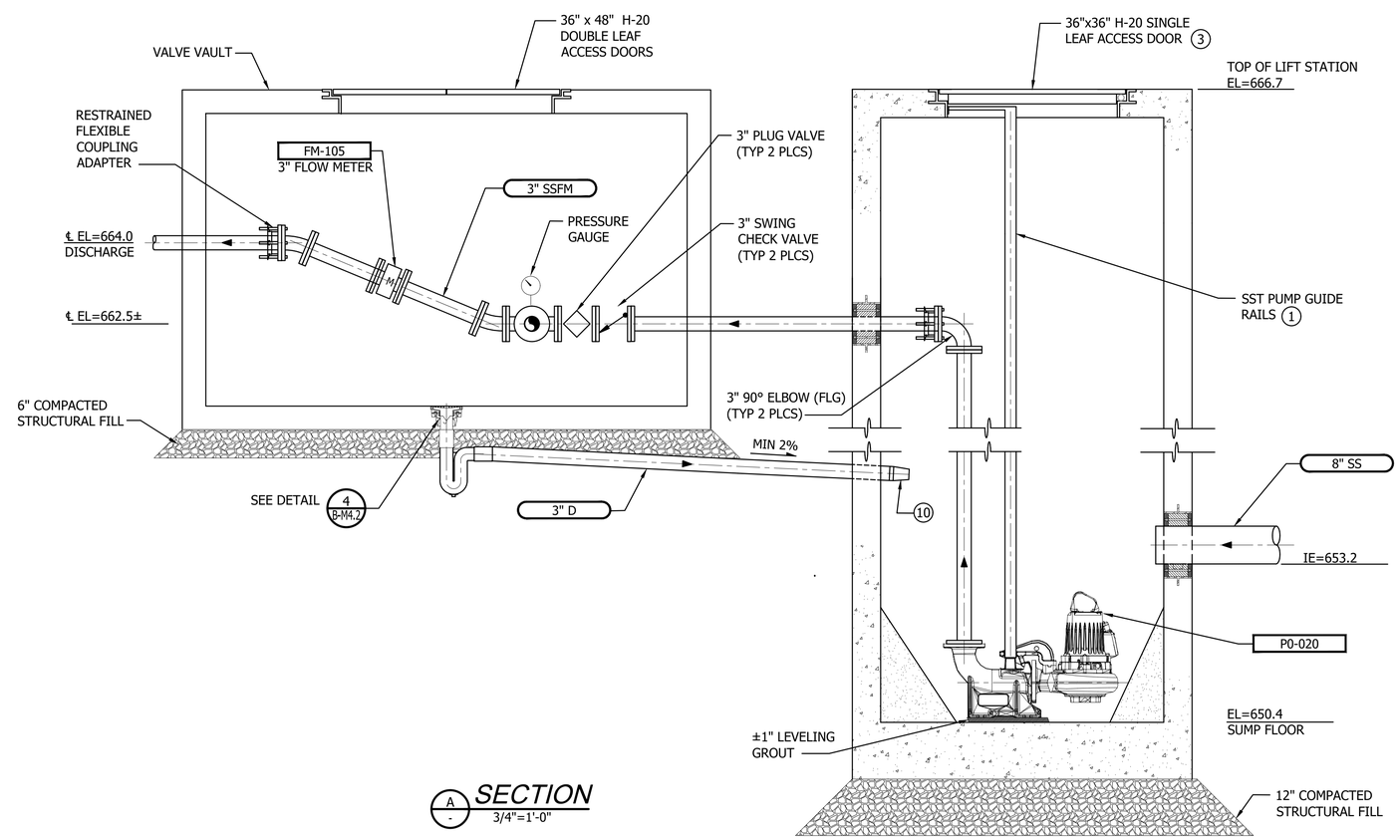

A SECTION
3/4"=1'-0"

Call 811 two business days before you dig

SHEET 174 OF 226

BID SET

CAD NO.

	DATE	APP.	INT.	REVISIONS	NO.

ACTION	BY	DATE
DESIGNED	AM	04/11/25
DRAWN	DP	04/11/25
CHECKED (FIELD)		
CHECKED (HDQTS.)		

BRIAN E BUNKER STATE OF WASHINGTON 46055 REGISTERED PROFESSIONAL ENGINEER 4/11/2025

REGISTERED STAMP

WASHINGTON STATE PARKS AND RECREATION COMMISSION

NISQUALLY STATE PARK

PHASE 3A MAINTENANCE BUILDING AND WWTF

INFLUENT PUMP STATION PLAN AND SECTION

B-M2.0

SCALE

AS NOTED

PARKS FILE#

U:\PSO\Projects\Clients\4763-RW Droll\216-4763-010 Nisqually-PortWWOptions\99Svcs\CADD\DWG\PS18062A-M2.0.dwg
Apr-11-25 9:27am

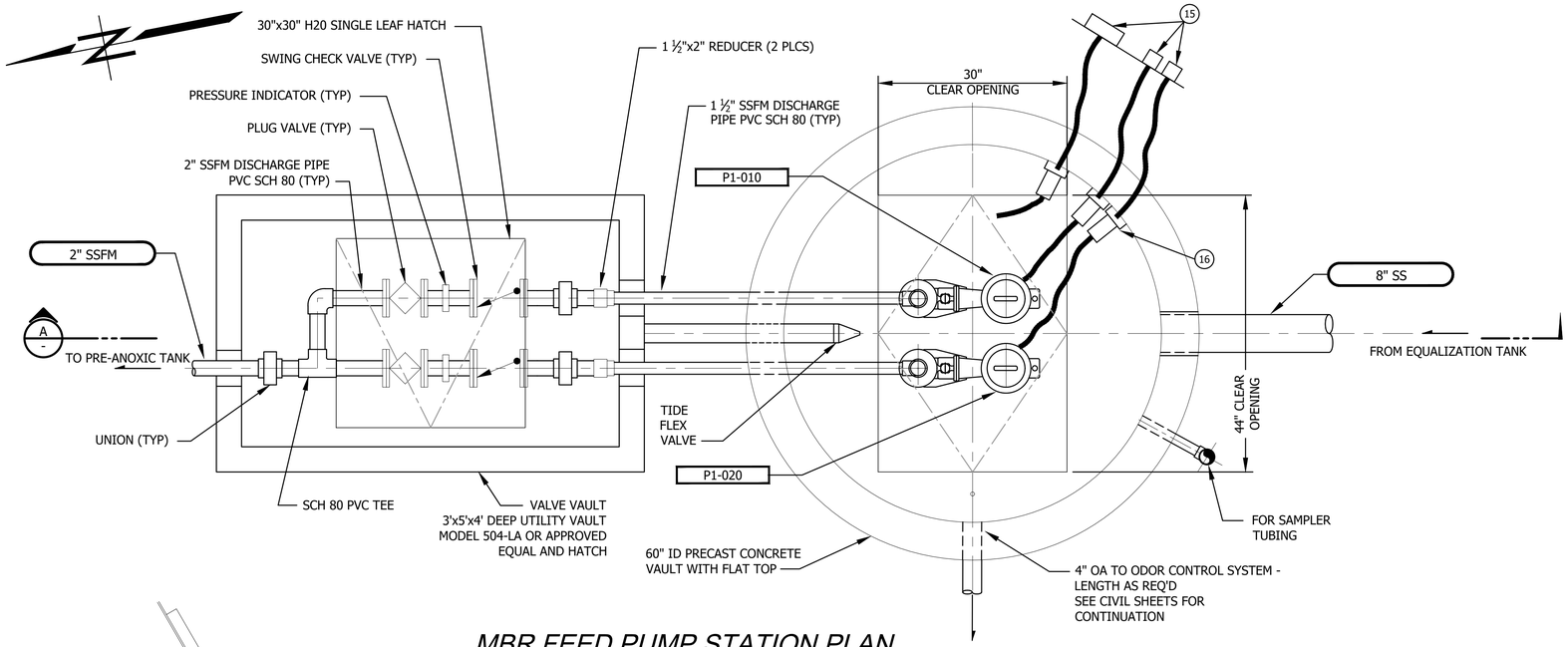

MBR FEED PUMP STATION PLAN

SCALE NO SCALE

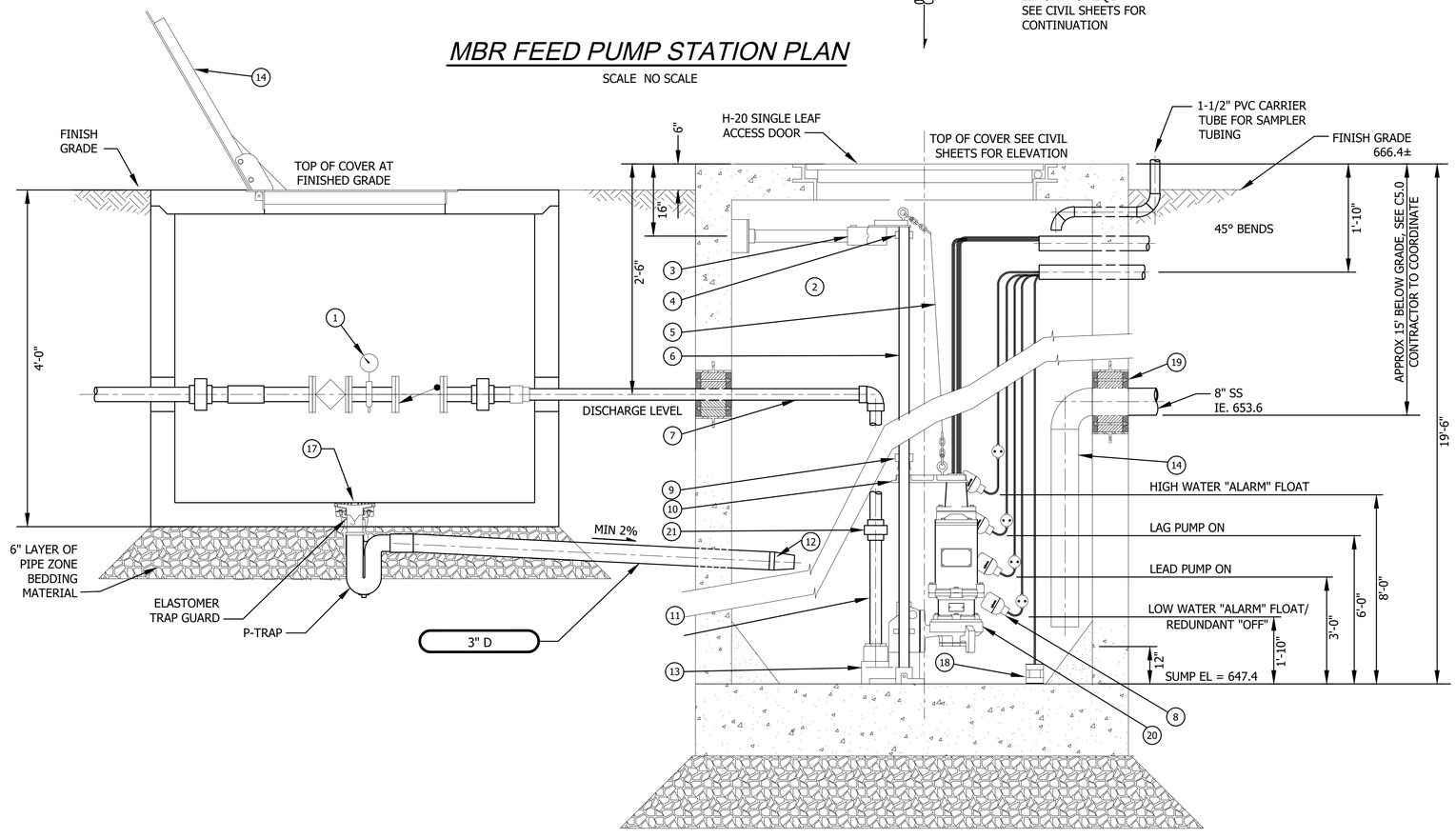

SECTION

NO SCALE

NOTE:

1. SEE SPECIFICATIONS PRIOR TO PACKAGED LIFT STATION INSTALLATION AND FOR RELATED EQUIPMENT.
2. MATCH PIPE DIAMETER FOR PIPE FITTINGS, AND VALVES TO DISCHARGE PIPE DIAMETER OF PUMP STATION
3. EQUIPMENT SHOWN FOR ILLUSTRATIVE PURPOSES. ACTUAL ITEMS MAY VARY IN LOCATION AND/OR APPEARANCE.

MATERIAL LIST:

1. PRESSURE GAUGE
2. USE SST FASTENERS
3. RAIL SUPPORT
4. TOP HOLDDOWN
5. LIFT-OUT CABLE, ¼"
6. GUIDE RAILS (TYP 2 PLCS)
7. DISCHARGE PIPE WITH MODULAR SEAL (TYP)
8. PUMP FLOAT (TYP 4 PLCS) SEE ELECTRICAL SHEETS AND SPECIFICATIONS
9. BOTTOM HOLD-DOWN, SST
10. GUIDE PLATE
11. DISCHARGE PIPE, PVC SCH 80 1½" FOR 2HP PUMP STATION
12. TIDE FLEX VALVE AND INVERT MUST BE AT LEAST 6" ABOVE HIGHWATER ALARM. USE TIDE FLEX VALVE SERIES TF-2, TF-35 OR APPROVED EQUAL
13. DISCHARGE BASE
14. DROP TUBE TO BE INSTALLED ON INLET
15. ELECTRICAL JUNCTION BOX, SEE ELECTRICAL SHEETS
16. CONDUIT FLANGE (TYP 3 PLCS)
17. 4" FLOOR DRAIN
18. LEVEL TRANSMITTER
19. PIPE PENETRATION WITH MODULAR SEAL AS SHOWN IN DETAIL 4 SHEET B-M3.5
20. PUMP
21. 1½" DISASSEMBLY UNION (SOCxSOC)

BID SET

Call 811 two business days before you dig

SHEET 175 OF 226

CAD NO.

NO.	REVISIONS	INT.	APP.	DATE

ACTION	BY	DATE
DESIGNED	AM	04/11/25
DRAWN	DP	04/11/25
CHECKED (FIELD)		
CHECKED (HDQTS.)		

BRIAN E BUNKER STATE OF WASHINGTON 46055 REGISTERED PROFESSIONAL ENGINEER 4/11/2025

REGISTERED STAMP

WASHINGTON STATE PARKS AND RECREATION COMMISSION

NISQUALLY STATE PARK

PHASE 3A MAINTENANCE BUILDING AND WWTF

MBR FEED PUMP STATION PLAN AND SECTION

B-M2.1

SCALE

NO SCALE

PARKS FILE#

U:\PSO\Projects\Clients\4763-RW Droll\216-4763-010 Nisqually-PorkWWOptions\99Svcs\CADD\DWG\PS180620-M2.1.dwg
Apr-11-25 9:28am

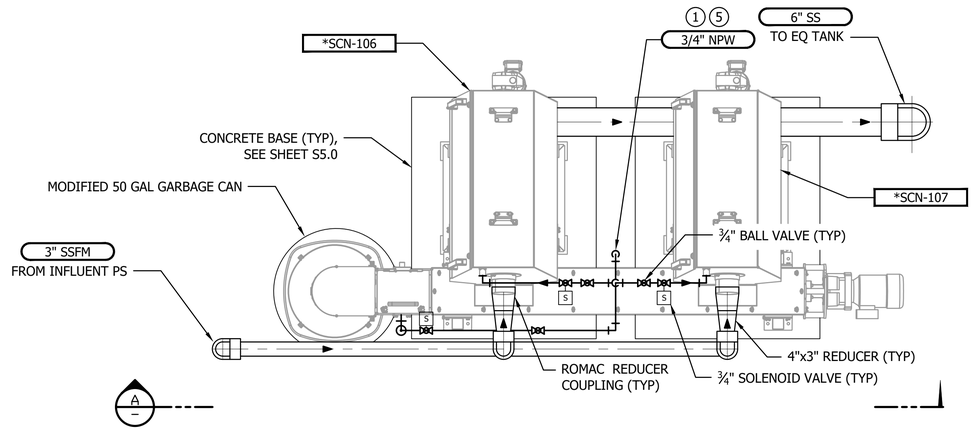

INFLUENT SCREEN PLAN

SCALE 3/4" = 1'-0"

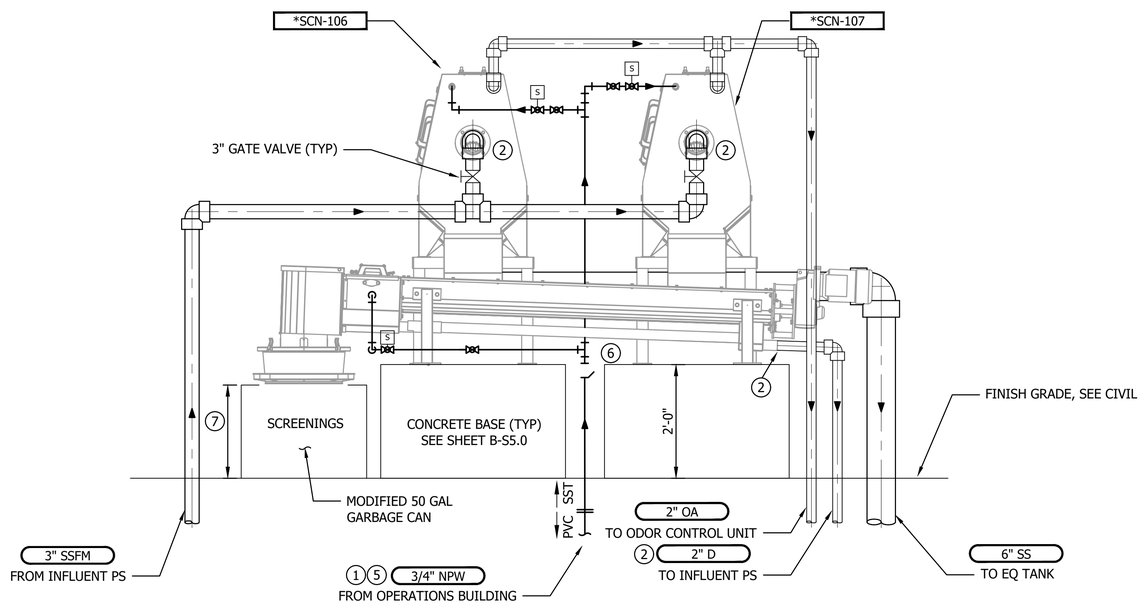

A SECTION

3/4"=1'-0"

NOTES:

1. ALL PIPES TO BE INSULATED AND HEAT TRACED. SEE SPECIFICATION SECTION 404100 FOR DETAILED INFORMATION.
2. CONTRACTOR TO PROVIDE ROMAC TRANSITION COUPLINGS FOR SCREEN'S PLAIN END: 5" INFLUENT, 6" DISCHARGE, AND 2" COMPACTOR DRAIN.
3. * ASTERISKED NOTE INDICATES EQUIPMENT AND MOUNTING HARDWARE SUPPLIED BY MANUFACTURER KUBOTA AND INSTALLED BY CONTRACTOR.
4. CONTRACTOR TO VERIFY DIMENSIONS, ELEVATIONS, AND LOCATIONS PRIOR TO CONSTRUCTION.
5. ALL NPW PIPE ABOVE GRADE TO BE SCHED 40 SST.
6. WYE STRAINER, 50 GRID.
7. CONTRACTOR TO MODIFY TO FIT SITE EQUIPMENT.

BID SET

Call 811 two business days before you dig

SHEET 176 OF 226

CAD NO.

NO.	REVISIONS	INT.	APP.	DATE

ACTION	BY	DATE
DESIGNED	AM	04/11/25
DRAWN	KT	04/11/25
CHECKED (FIELD)		
CHECKED (HDQTS.)		

BRIAN E BUNKER
STATE OF WASHINGTON
46055
REGISTERED PROFESSIONAL ENGINEER
4/11/2025

REGISTERED STAMP

WASHINGTON STATE PARKS AND RECREATION COMMISSION

NISQUALLY STATE PARK

PHASE 3A MAINTENANCE BUILDING AND WWTF

INFLUENT SCREEN PLAN AND SECTION

B-M2.2

SCALE

AS NOTED

PARKS FILE#

U:\PSO\Projects\Clients\4763-RW Droll\216-4763-010 Nisqually PorkWWOptions\995vcs\CADD\DWG\PS18062A-M2.2.dwg
Apr-11-25 9:31am

NOTES:

1. * ASTERISKED NOTE INDICATE PIPING, EQUIPMENT AND MOUNTING HARDWARE SUPPLIED BY MANUFACTURER KUBOTA AND INSTALLED BY CONTRACTOR. SEE SPECIFICATION SECTION 017050 FOR DETAILED INFORMATION.
2. FOR PIPING MATERIALS SPECIFICATIONS AND ABBREVIATIONS SEE DIVISION 40 TECHNICAL SPECIFICATIONS.
3. FOR ALL PIPE PENETRATIONS THROUGH FLOOR SEE DETAIL 5 SHEET B-M3.5
4. ** ASTERISKED NOTE INDICATE PIPING, EQUIPMENT AND MOUNTING HARDWARE SUPPLIED BY CHEMICAL SUPPLIER.

KEY NOTES:

1. REDUCE 2" PE PIPE TO ⅜" HOSE CONNECTION, PROVIDE SUCTION HOSE TO AUTOSAMPLER. CONNECT AUTOSMPLER PUMP SUCTION WITH VINYL OR PTFE-LINED VINYL HOSE.
2. CONNECT CHEMICAL PUMP SUCTION AND DISCHARGE PIPES WITH 1" FLEXABLE REINFORCES BRAIDED PE HOSE. CONNECT TO PROCESS PIPE WITH (NPT) THREADED CONNECTIONS.
3. INSTALL THREADED ADAPTERS (SOCxNPT) FOR CONNECTION OF PUMP DISCHARGE HOSES (3 PLCS).
4. LOCATE 2" TRUE UNION BALL VALVE IN RISER. 48" ABOVE FINISH FLOOR.
5. WRAP AND INSULATE EXPOSED 1-1/2" PE AND 2" PE AT PLANT EFFLUENT STORAGE TANK WITH CLOSED CELL PIPE INSULATION, ALUMINUM JACKETING AND HEAT TRACING SYSTEM PER ELECTRICAL DRAWINGS AND SPECIFICATIONS.
6. (3) 1" CHF PIPES PENETRATE CONCRETE FLOOR , SEE DETAIL 18, SHEET B-M3.6. TYPICAL THREE PLACES.

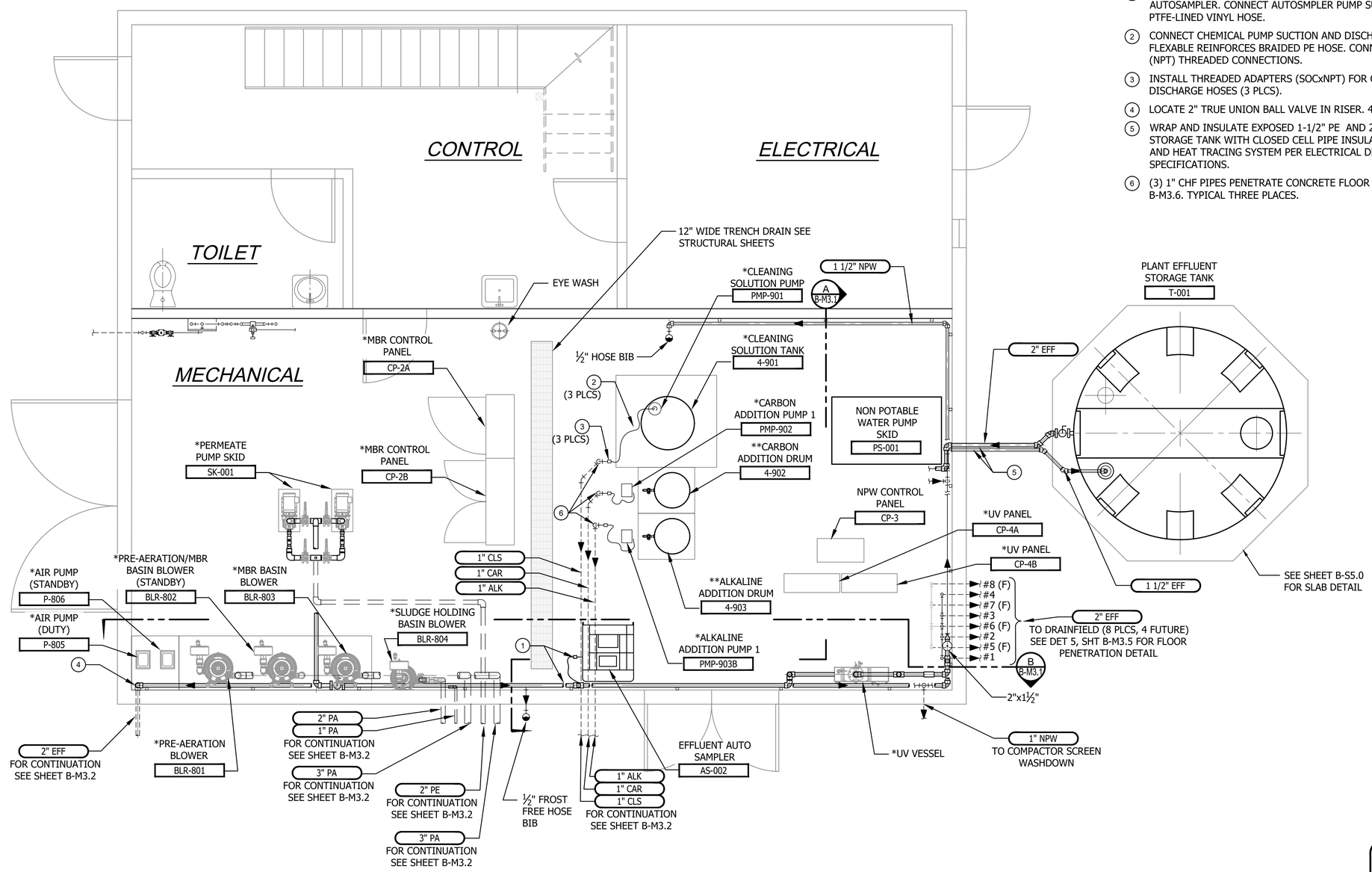

PLAN

SCALE 3/8" = 1'-0"

Call 811 two business days before you dig

SHEET 177 OF 226

BID SET

CAD NO.

NO.	REVISIONS	INT.	APP.	DATE

ACTION	BY	DATE
DESIGNED	TS	04/11/25
DRAWN	KT	04/11/25
CHECKED (FIELD)		
CHECKED (HDQTS.)		

BRIAN E BUNKER STATE OF WASHINGTON 46055 REGISTERED PROFESSIONAL ENGINEER 4/11/2025

REGISTERED STAMP

WASHINGTON STATE PARKS AND RECREATION COMMISSION

NISQUALLY STATE PARK

PHASE 3A MAINTENANCE BUILDING AND WWTF

OPERATIONS BUILDING INTERNAL PIPING PLAN

B-M3.0

SCALE

AS NOTED

PARKS FILE#

U:\PSO\Projects\Clients\4763-RW Draft\216-4763-010 Nisqually\ParkWWOptions\99Svcs\CADD\DWG\PS180620A-M3.0.dwg
Apr-11-25 9:39am

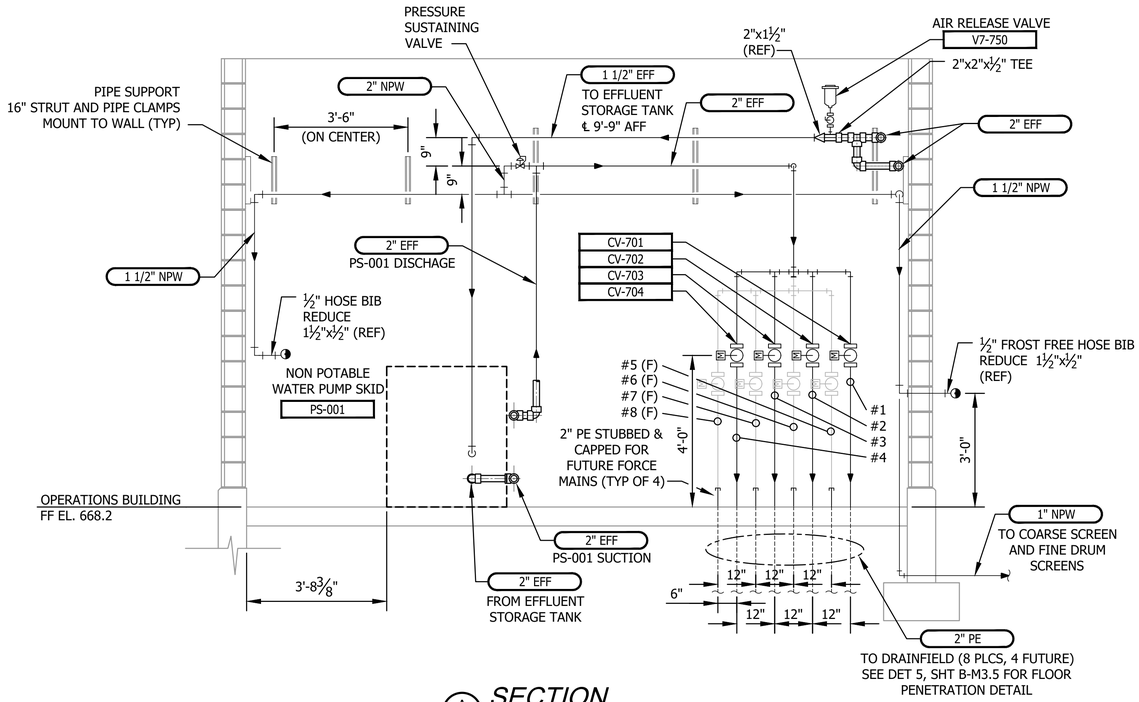

A B-M3.0 **SECTION**
SCALE ½" = 1'-0"

NOTES:

1. GRAPHIC: AS SHOWN WITH BLACK LEGEND ON YELLOW FIELD IN ACCORDANCE WITH ANSI Z535.1 AND ANSI Z535.2.
2. MATERIAL: FADEPROOF GRAPHIC PERMANENTLY EMBEDDED IN 0.10 INCH THICK FIBERGLASS REINFORCED PLASTIC. GUARANTEED NOT TO CHIP, FADE OR PEEL FOR 15 YEARS.
3. ROUNDED CORNERS AND 4 MOUNTING HOLES.

1 - **DETAIL**
SCALE: NONE

NOTES:

1. * ASTERISKED NOTE INDICATE PIPING, EQUIPMENT AND MOUNTNG HARDWARE SUPPLIED BY MANUFACTURER KUBOTA AND INSTALLED BY CONTRACTOR. SEE SPECIFICATION SECTION 017050 FOR DETAILED INFORMATION.
2. FOR PIPING MATERIALS SPECIFICATIONS AND ABBREVIATIONS SEE DIVISION 40 TECHNICAL SPECIFICATIONS.
3. NON POTABLE WATER PUMP SKID AND EFFLUENT DISPOSAL PUMP SKID SHALL HAVE FLEXIBLE CONNECTIONS TO PROCESS PIPE, CONNECTIONS NOT SHOWN FOR CLARITY.
4. CONTRACTOR SHALL LOCATE UNIONS AS REQUIRED FOR EASY OF ASSEMBLY, NOT SHOWN FOR CLARITY.
5. CONTRACTOR SHALL INSTALL HOSE RACKS AND WARNING SIGNS AT ALL HOSE BIB LOCATIONS. SEE DETAILS 1 AND 2 THIS SHEET.

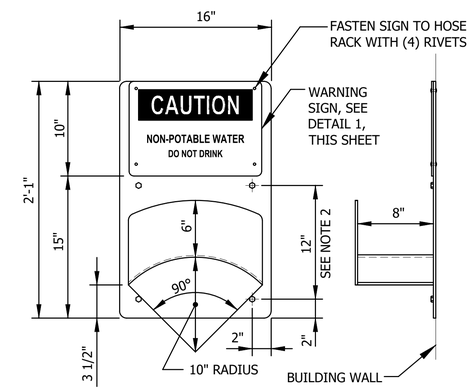

NOTES:

1. ALL HOSE RACKS AND MOUNTINGS SHALL BE WELDED CONSTRUCTION. MATERIAL SHALL BE MINIMUM 3/16" STEEL PLATE, HOT DIP GALVANIZED AFTER FABRICATION. ALL FASTENERS SHALL BE TYPE 316 STAINLESS STEEL.
2. ROUND ALL CORNERS (3/4" RADIUS).

2 - **DETAIL**
SCALE: NONE

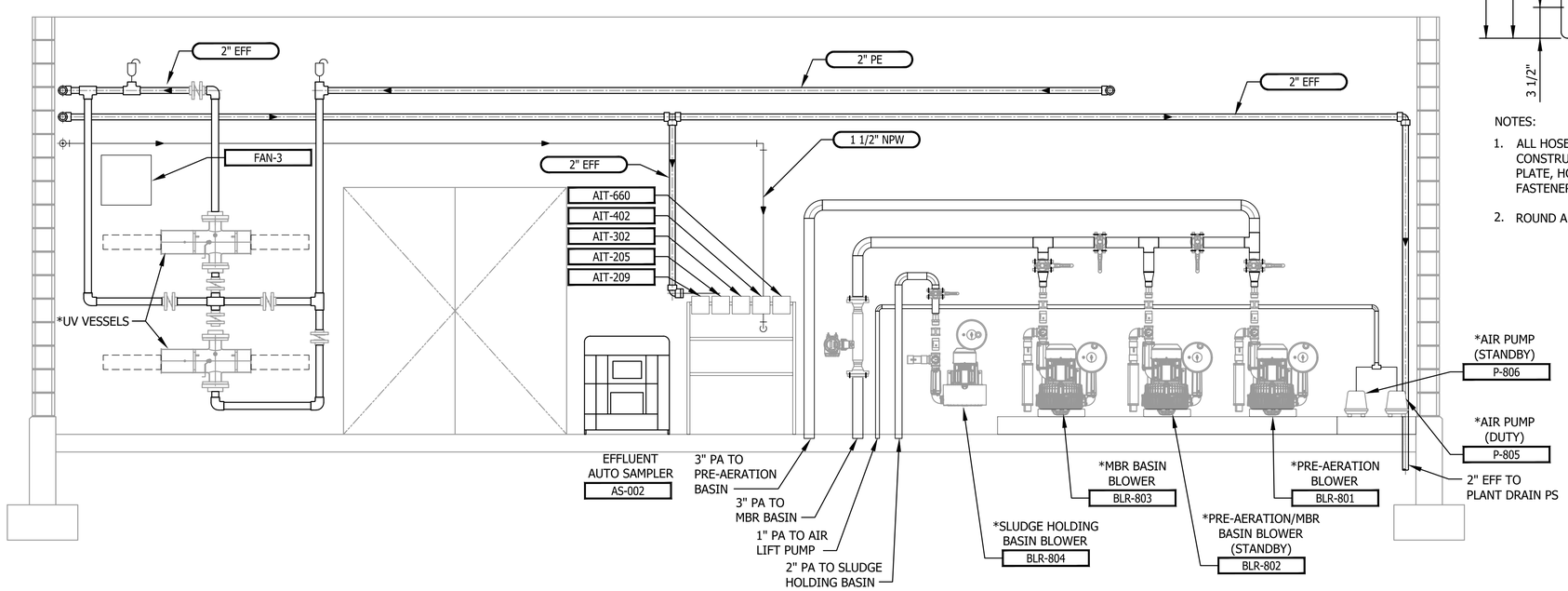

B B-M3.0 **SECTION**
SCALE ½" = 1'-0"

Call 811 two business days before you dig

SHEET 178 OF 226

BID SET

CAD NO.

NO.	REVISIONS	INT.	APP.	DATE

ACTION	BY	DATE
DESIGNED	TS	04/11/25
DRAWN	KT	04/11/25
CHECKED (FIELD)		
CHECKED (HDQTS.)		

BRIAN E BUNKER STATE OF WASHINGTON 46055 REGISTERED PROFESSIONAL ENGINEER
4/11/2025
REGISTERED STAMP

WASHINGTON STATE PARKS AND RECREATION COMMISSION

NISQUALLY STATE PARK

PHASE 3A MAINTENANCE BUILDING AND WWTF OPERATIONS BUILDING INTERNAL PIPING SECTION AND DETAILS

B-M3.1

SCALE
AS NOTED

PARKS FILE#

U:\PSO\Projects\Clients\4763-RW Droll\216-4763-010 Nisqually-PortWWOptions\99Svcs\CADD\DWG\PS18062A-M3.1.dwg
Apr-11-25 9:37am

CONSTRUCTION NOTES:

1. RAIL PUMP AND BASE ELBOW WITH INTEGRATED CHECK VALVE.
2. 3'-0"x2'-6" ACCESS HATCH, DOUBLE LEAF ALUMINUM DOORS
3. FOR CONTINUATION SEE SHEET B-M3.0

NOTES:

1. * ASTERISKED NOTE INDICATE PIPING, EQUIPMENT AND MOUNTNG HARDWARE SUPPLIED BY MANUFACTURER KUBOTA AND INSTALLED BY CONTRACTOR. SEE KUBOTA SHOP DRAWINGS FOR DETAILED INFORMATION.
2. FOR PIPING MATERIALS SPECIFICATIONS AND ABBREVIATIONS SEE DIVISION 40 TECHNICAL SPECIFICATIONS.
3. ALL BURIED PIPING, INCLUDING SMALL PIPING, SHALL HAVE TWO FLEXIBLE JOINTS (5 DEGREE MINIMUM) OR FLEXIBLE COUPLINGS TO ACCOMMODATE DIFFERENTIAL SETTLEMENT AS RECOMMENDED IN AWWA M-11 FOR A MINIMUM PIPE SETTLEMENT OF 2 INCHES, WHEN PENETRATING STRUCTURE; GENERALLY, THE FIRST JOINT 12 TO 18 INCHES AND SECOND 30 TO 42 INCHES FROM WALL, MANHOLE OR OTHER STRUCTURE, DEPENDING UPON PIPE SIZE.
4. PORTABLE CRANE WALL MOUNT LOCATION (TYP OF 5). CRANE BASE TO BE CENTERED ON EQUIPMENT DISCHARGE PIPE OR SUPPORT CENTERLINE. CONFIRM EQUIPMENT LOCATIONS WITH KUBOTA MBR MANUFACTURER.
5. WRAP AND INSULATE EXPOSED PIPING WITH CLOSED CELL PIPE INSULATION, ALUMINUM JACKETING AND HEAT TRACING SYSTEM PER ELECTRICAL DRAWINGS AND SPECIFICATIONS.

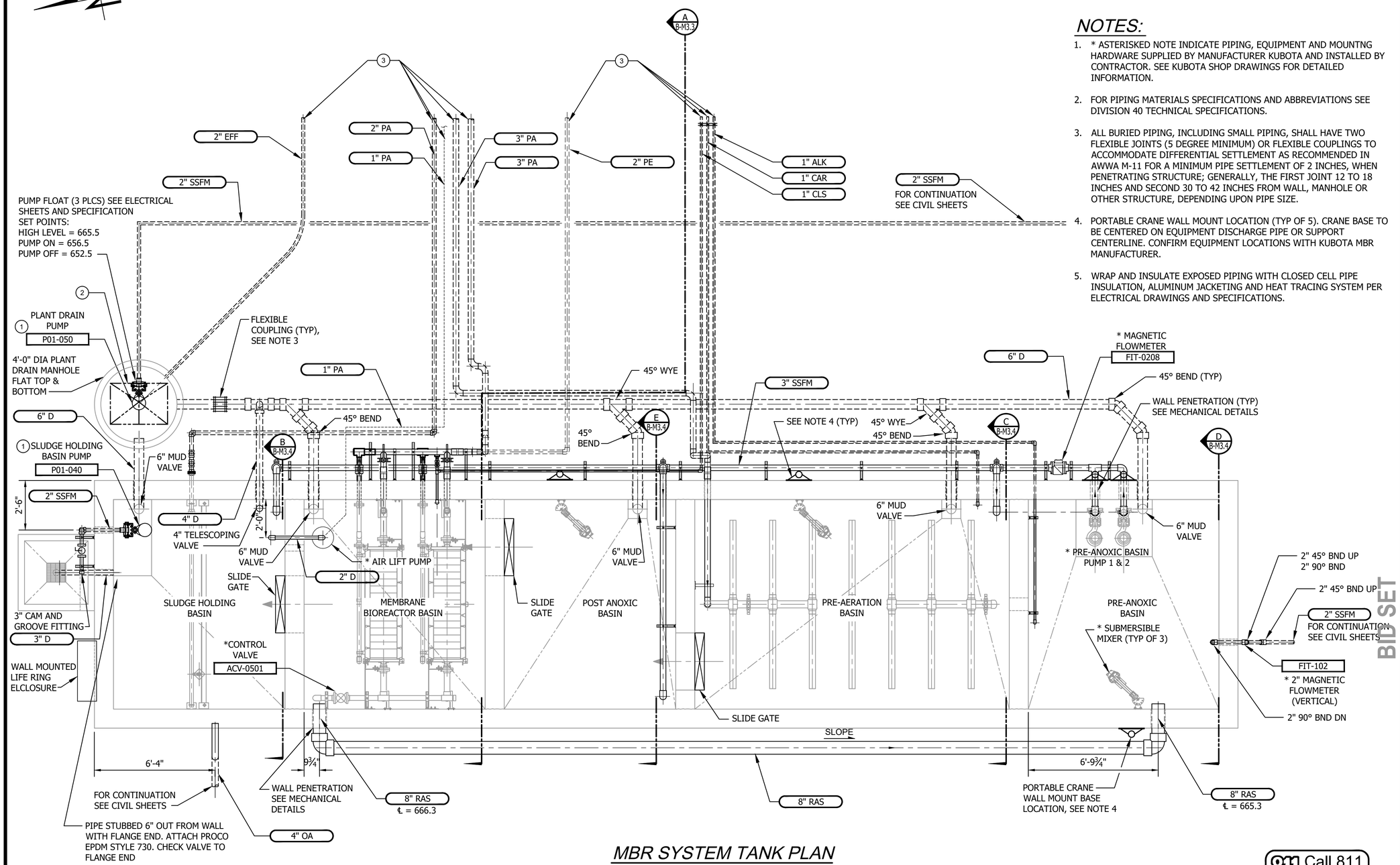

MBR SYSTEM TANK PLAN

SCALE ⅜"=1'-0"

Call 811 two business days before you dig

SHEET 179 OF 226

BID SET

CAD NO.		
		DATE
		APP.
		INT.
		REVISIONS
		NO.

ACTION	BY	DATE
DESIGNED	TS	04/11/25
DRAWN	KT	04/11/25
CHECKED (FIELD)		
CHECKED (HDQTS.)		

BRIAN E BUNKER STATE OF WASHINGTON 46055 REGISTERED PROFESSIONAL ENGINEER 4/11/2025

REGISTERED STAMP

WASHINGTON STATE PARKS AND RECREATION COMMISSION

NISQUALLY STATE PARK

PHASE 3A MAINTENANCE BUILDING AND WWTF

MBR SYSTEM TANK PLAN

B-M3.2

SCALE

AS NOTED

PARKS FILE#

U:\PSO\Projects\Clients\4763-RW Droll\216-4763-010 Nisqually-PorkWWOptions\99Svcs\CADD\DWG\PS180620-M3.2.dwg
Apr-11-25 9:36am

NOTES:

1. * ASTERISKED NOTE INDICATE PIPING, EQUIPMENT AND MOUNTNG HARDWARE SUPPLIED BY MANUFACTURER KUBOTA AND INSTALLED BY CONTRACTOR. SEE KUBOTA SHOP DRAWINGS FOR DETAILED INFORMATION.
2. FOR PIPING MATERIALS SPECIFICATIONS AND ABBREVIATIONS SEE DIVISION 40 TECHNICAL SPECIFICATIONS.
3. INTERNAL EQUIPMENT, VALVES, PIPING AND SUPPORTS IN THE MEMBRANE BIOREACTOR BASIN EXCEPT MUD VALVE ASSEMBLY ARE SUPPLIED BY MANUFACTURER KUBOTA AND INSTALLED BY CONTRACTOR. REVIEW KUBOTA SHOP DRAWINGS FOR DETAILED INFORMATION.

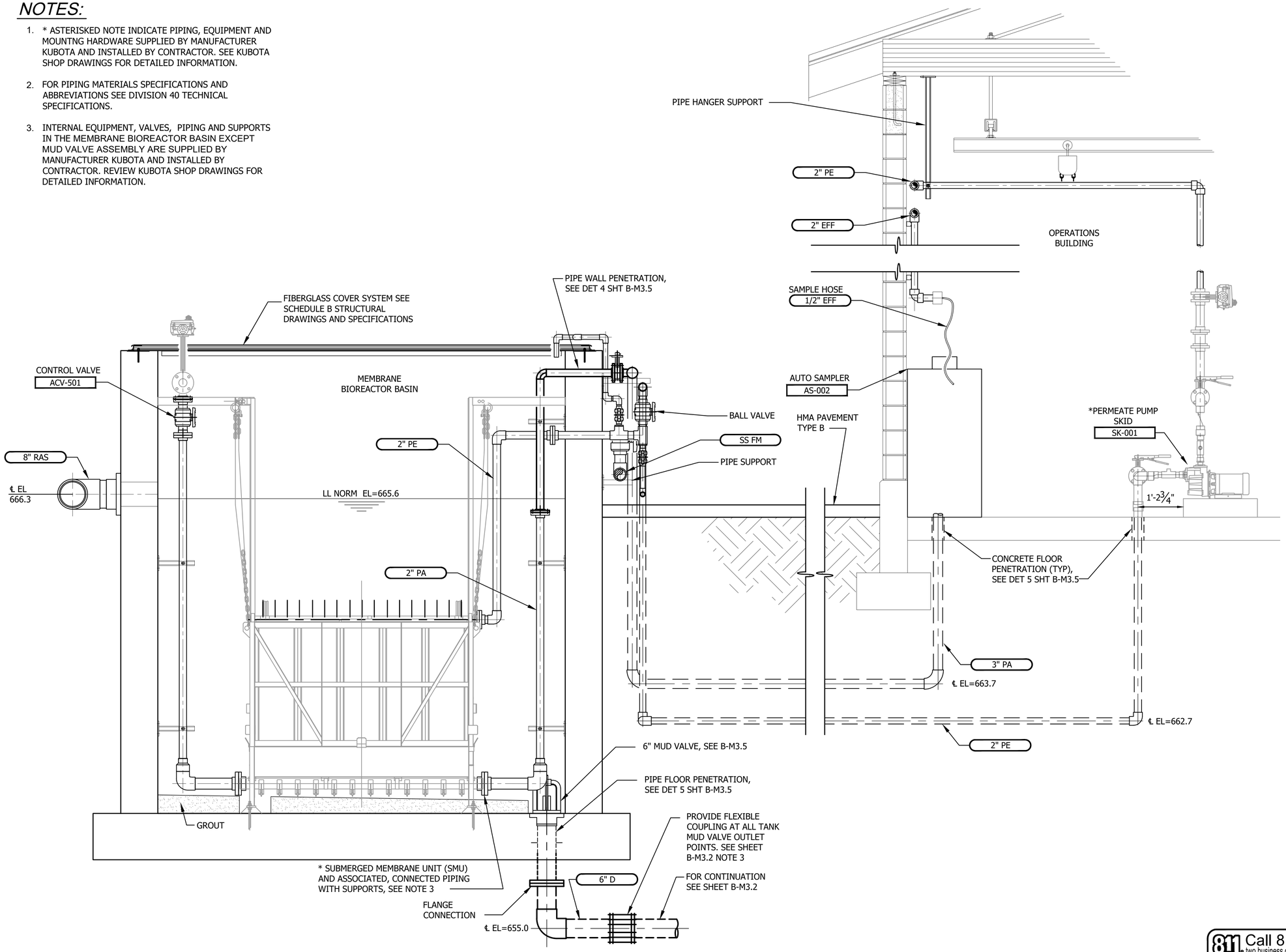

A / M3.2 SECTION
SCALE 3/4" = 1'

Call 811 two business days before you dig

SHEET 180 OF 226

BID SET

CAD NO.		
		DATE
		APP.
		INT.
		REVISIONS
		NO.

ACTION	BY	DATE
DESIGNED	TS	04/11/25
DRAWN	KT	04/11/25
CHECKED (FIELD)		
CHECKED (HDQTS.)		

BRIAN E BUNKER, STATE OF WASHINGTON, 46055, REGISTERED PROFESSIONAL ENGINEER
4/11/2025
REGISTERED STAMP

WASHINGTON STATE PARKS AND RECREATION COMMISSION

NISQUALLY STATE PARK

PHASE 3A MAINTENANCE BUILDING AND WWTF

MBR TANK INTERNAL PIPING SECTION

B-M3.3

SCALE
AS NOTED

PARKS FILE#

U:\PSO\Projects\Clients\4763-RW Droll\216-4763-010 Nisqually PorkWWOptions\99Svcs\CADD\DWG\PS180620A-M3.3.dwg
Apr-11-25 9:35am

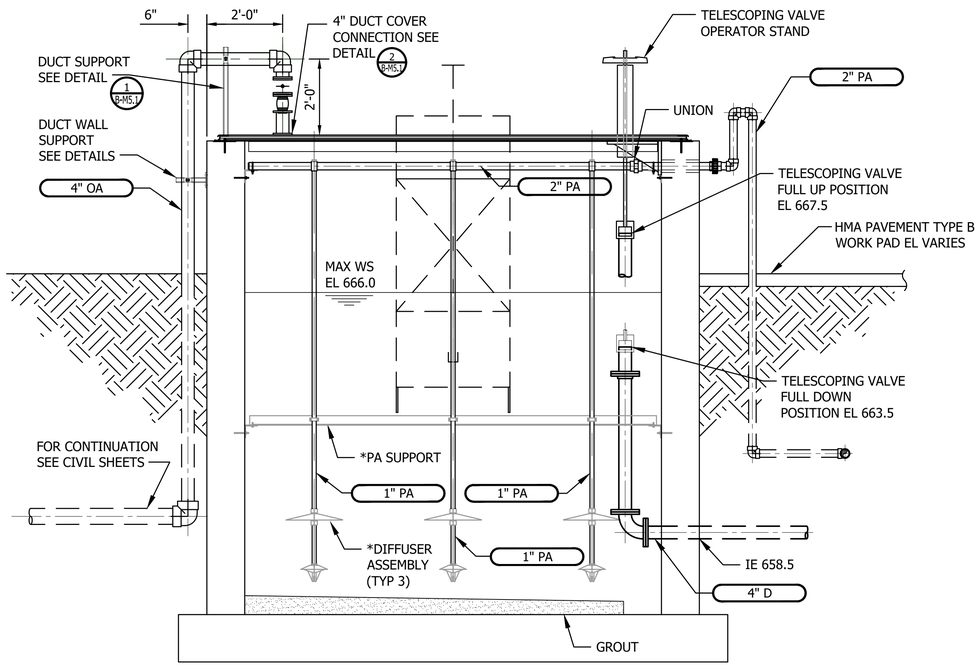

SLUDGE HOLDING BASIN

B B-M3.2 SECTION
SCALE 1/2" = 1'

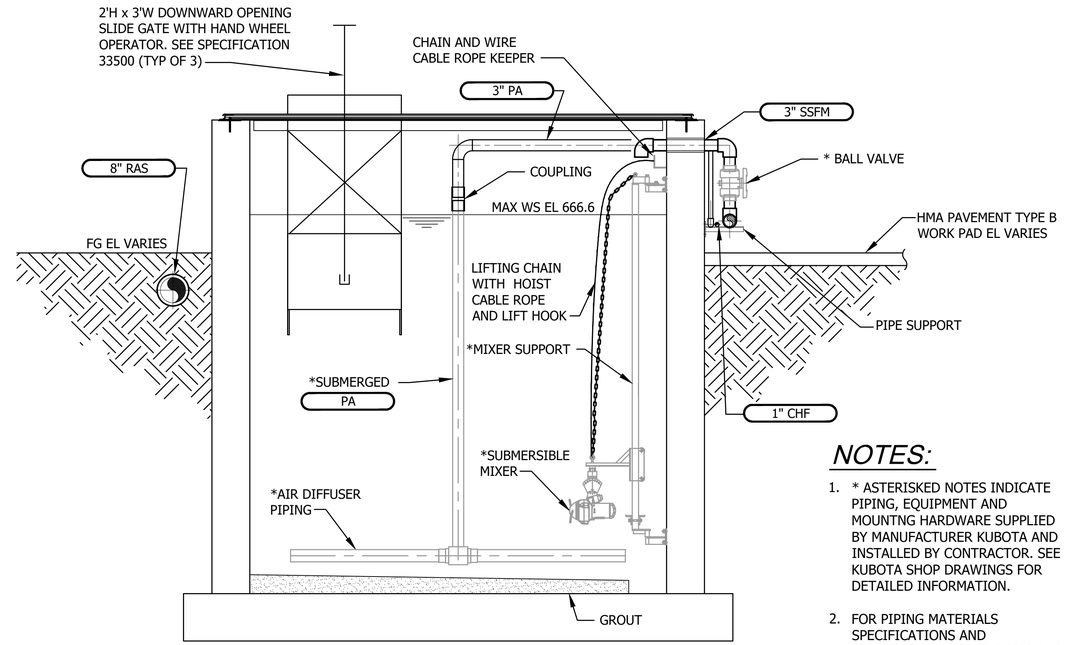

PRE-AERATION BASIN

C B-M3.2 SECTION
SCALE 1/2" = 1'

NOTES:

1. * ASTERISKED NOTES INDICATE PIPING, EQUIPMENT AND MOUNTNG HARDWARE SUPPLIED BY MANUFACTURER KUBOTA AND INSTALLED BY CONTRACTOR. SEE KUBOTA SHOP DRAWINGS FOR DETAILED INFORMATION.
2. FOR PIPING MATERIALS SPECIFICATIONS AND ABBREVIATIONS SEE DIVISION 40 TECHNICAL SPECIFICATIONS.

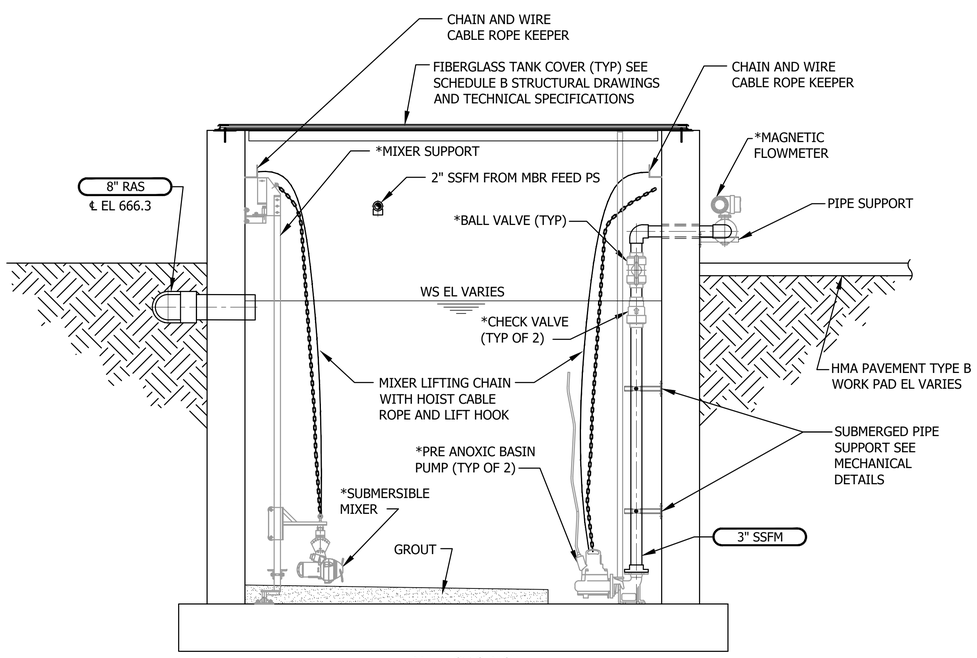

PRE-ANOXIC BASIN

D B-M3.2 SECTION
SCALE 1/2" = 1'

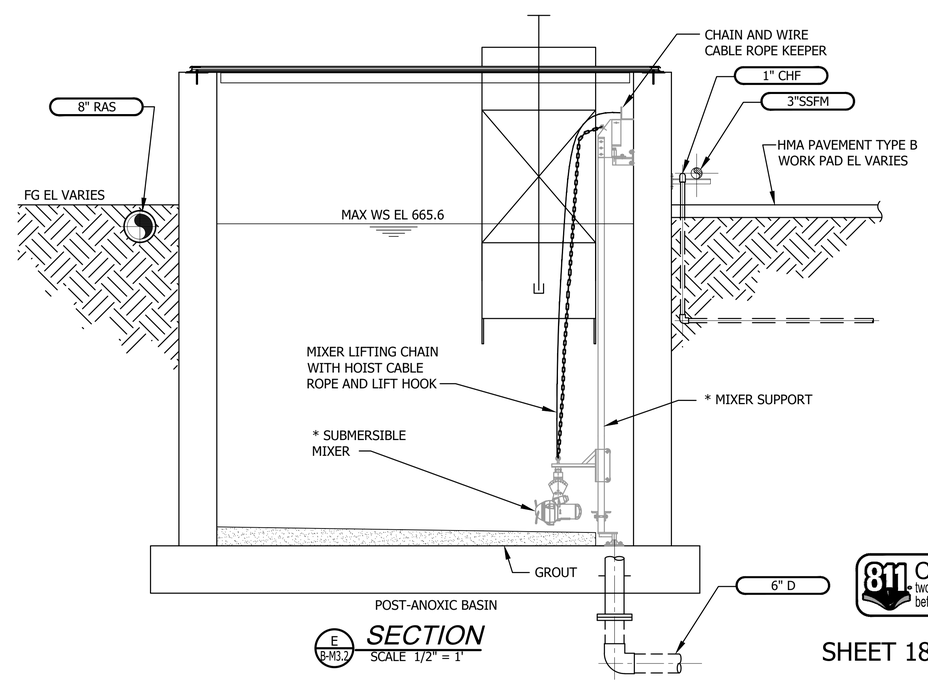

POST-ANOXIC BASIN

E B-M3.2 SECTION
SCALE 1/2" = 1'

811 Call 811 two business days before you dig

SHEET 181 OF 226

BID SET

CAD NO.

NO.	REVISIONS	INT.	APP.	DATE

ACTION	BY	DATE
DESIGNED	TS	04/11/25
DRAWN	KT	04/11/25
CHECKED (FIELD)		
CHECKED (HDQTS.)		

BRIAN E BUNKER STATE OF WASHINGTON 46055 REGISTERED PROFESSIONAL ENGINEER
4/11/2025

REGISTERED STAMP

WASHINGTON STATE PARKS AND RECREATION COMMISSION

NISQUALLY STATE PARK

PHASE 3A MAINTENANCE BUILDING AND WWTF

MBR SYSTEM PIPING SECTIONS

B-M3.4

SCALE
AS NOTED

PARKS FILE#

U:\PSO\Projects\Clients\4763-RW Dnol\216-4763-010 Nisqually\ParkWWOptions\99Svcs\CADD\DWG\PS18062A-M3.4.dwg
Apr-11-25 9:40am

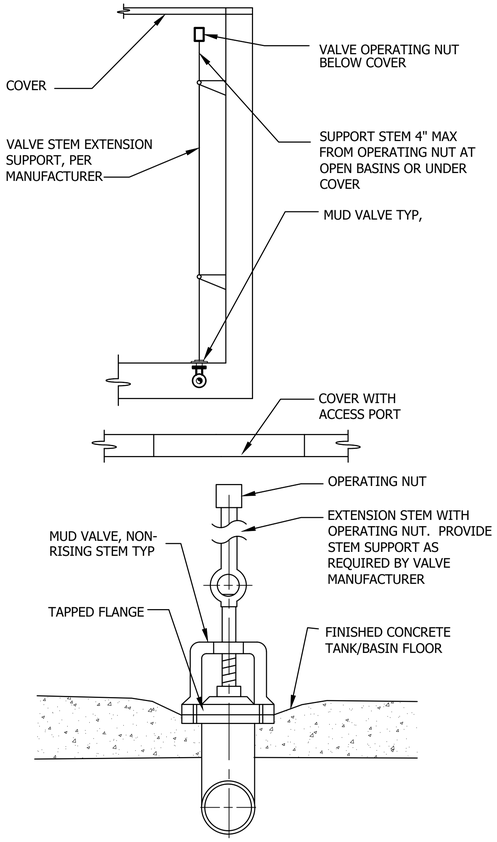

MUD VALVE INSTALLATION DETAIL

1 / - NTS

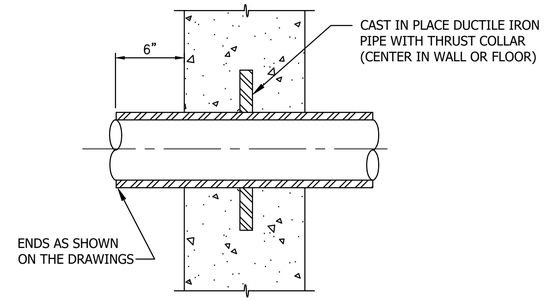

NOTE:

1. COAT WALL PIPE WITH SPECIFIED PAINT SYSTEM BEFORE CONCRETE PLACEMENT.

DUCTILE IRON WALL OR FLOOR PIPE DETAIL

3 / - NTS

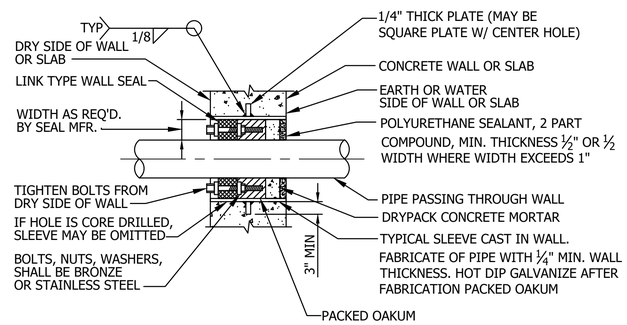

TYPICAL PIPE PENETRATION DETAIL

4 / - NTS

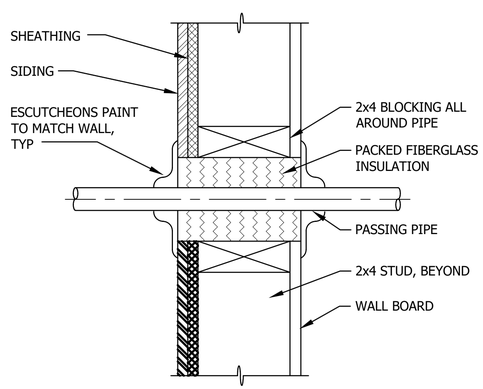

STUD WALL PIPE PENETRATION DETAIL

2 / - NTS

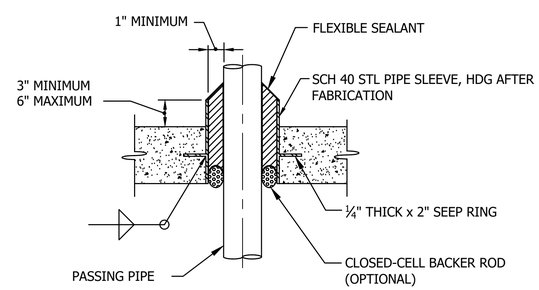

NOTE:

1. AT EXISTING FLOORS OR PRECAST VAULTS OR MANHOLES CORE DRILL HOLE TO SUIT AND OMIT PIPE SLEEVE.

CONCRETE FLOOR PENETRATION DETAIL

5 / - NTS

Call 811 two business days before you dig

SHEET 182 OF 226

BID SET

CAD NO.

NO.	REVISIONS	INT.	APP.	DATE

ACTION	BY	DATE
DESIGNED	TS	04/11/25
DRAWN	KT	04/11/25
CHECKED (FIELD)		
CHECKED (HDQTS.)		

BRIAN E BUNKER, STATE OF WASHINGTON, 46055, REGISTERED PROFESSIONAL ENGINEER
4/11/2025

REGISTERED STAMP

WASHINGTON STATE PARKS AND RECREATION COMMISSION

NISQUALLY STATE PARK

PHASE 3A MAINTENANCE BUILDING AND WWTF

MECHANICAL PIPING DETAILS

B-M3.5

SCALE

NO SCALE

PARKS FILE#

U:\PSO\Projects\Clients\4763-RW Droll\216-4763-010 Nisqually PorkWWOptions\99Svcs\CADD\DWG\PS180620-M3.5.dwg
Apr-11-25 9:51am

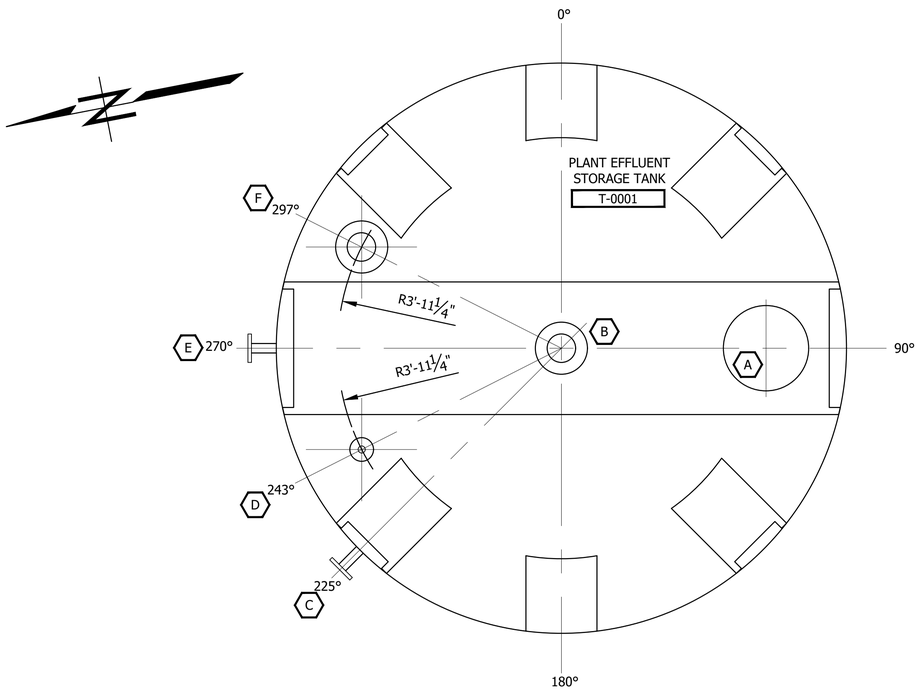

PLANT EFFLUENT STORAGE TANK DETAIL

1 / - ¾"= 1'-0"

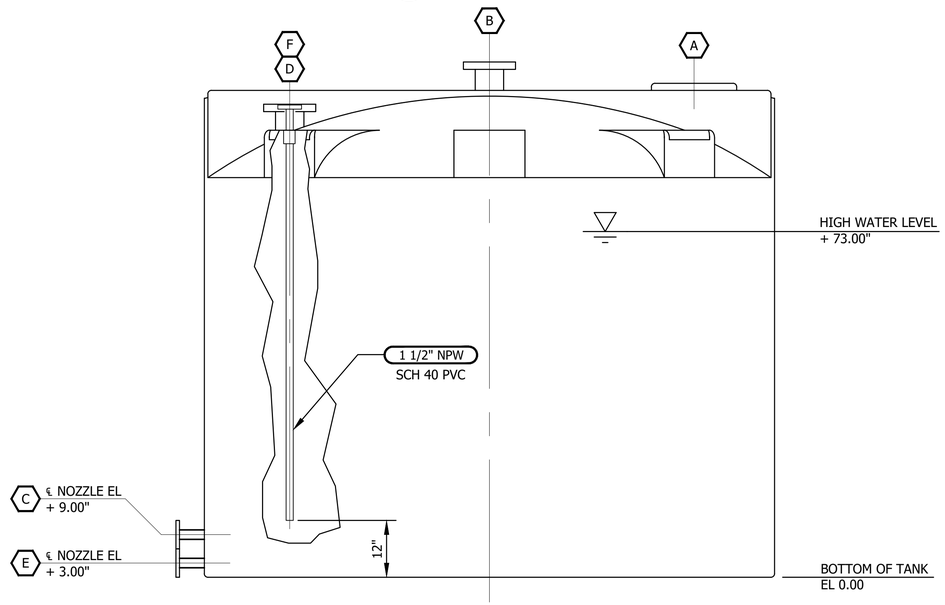

PLANT EFFLUENT STORAGE TANK ILLUSTRATIVE ELEVATION

SCALE: ¾"= 1'-0"

NOTES:

1. FOR PIPING MATERIALS SPECIFICATIONS AND ABBREVIATIONS SEE DIVISION 33 TECHNICAL SPECIFICATIONS.
2. INSULATE EXPOSED NOZZLES WITH HEAT TRACING SYSTEM CLOSED CELL PIPE INSULATION AND ALUMINUM JACKET. PER ELECTRICAL DRAWINGS.
3. ALL NOZZLES SHALL BE 150 LB. RAISED FACE FLANGES.
4. ALL ANCHORAGE KITS SHALL BE SUPPLIED BY TANK MANUFACTURER.

NOZZLE SCHEDULE NON POTABLE WATER TANK

MARK	SIZE	PROJECTION	MATERIAL	SERVICE	REMARKS
A	15 INCH ACCESS	N/A	N/A	N/A	
B	6 INCH	6"	PVC	VENT	
C	2 INCH	6"	PVC	PROCESS DISCHARGE	
D	1 ½" INCH	6"	PVC	PROCESS FILL	WITH 1 ½" INTERNAL FILL PIPE
E	2 INCH	6"	PCV	TANK DRAIN	
F	6 INCH	6"	PVC	LEVEL INSTRUMENT	

BID SET

Call 811 two business days before you dig

SHEET 183 OF 226

CAD NO.

NO.	REVISIONS	INT.	APP.	DATE

ACTION	BY	DATE
DESIGNED	TS	04/11/25
DRAWN	KT	04/11/25
CHECKED (FIELD)		
CHECKED (HDQTS.)		

BRIAN E BUNKER STATE OF WASHINGTON 46055 REGISTERED PROFESSIONAL ENGINEER 4/11/2025

REGISTERED STAMP

WASHINGTON STATE PARKS AND RECREATION COMMISSION

NISQUALLY STATE PARK

PHASE 3A MAINTENANCE BUILDING AND WWTF

PLANT EFFLUENT STORAGE TANK DETAILS

B-M3.6

SCALE

AS NOTED

PARKS FILE#

U:\PSO\Projects\Clients\4763-RW Droll\216-4763-010 Nisqually\ParkWWOptions\999vcs\CADD\DWG\PS18062A-M3.6.dwg
Apr-11-25 9:45am

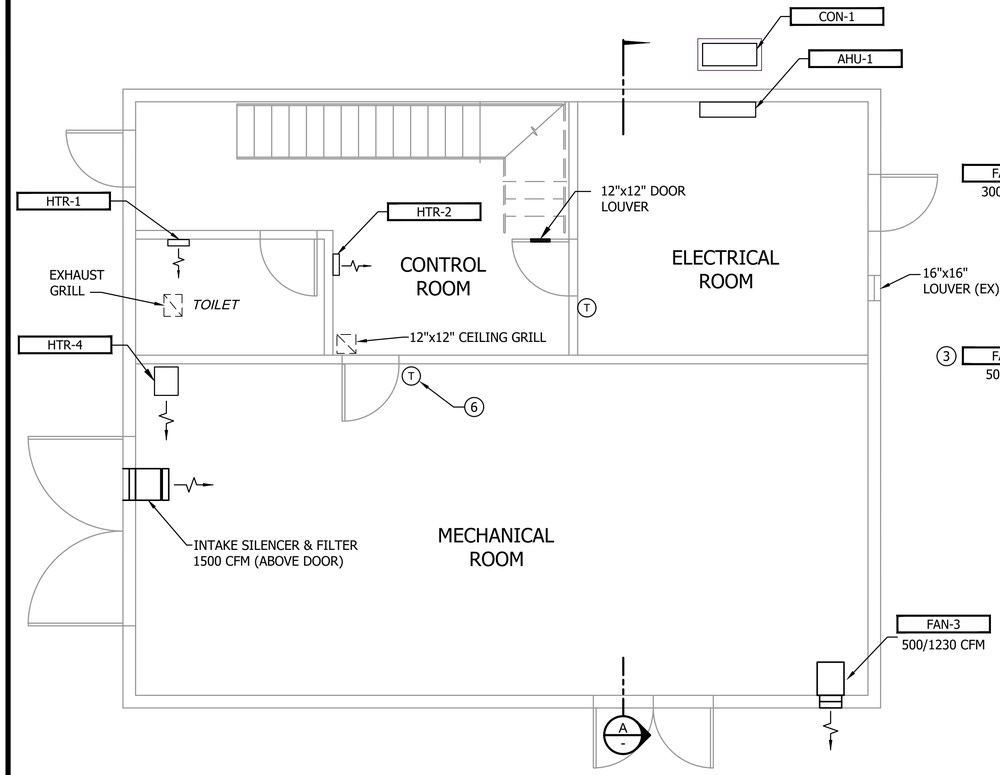

FLOOR PLAN @ GROUND FLOOR

SCALE 1/4" = 1'-0"

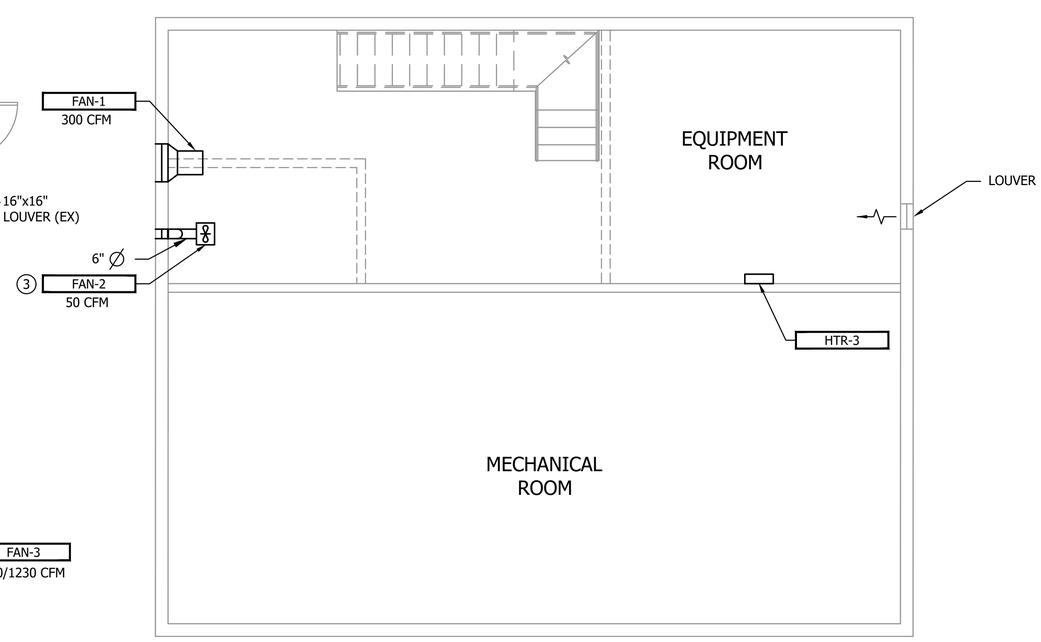

SECOND FLOOR PLAN @ EL 11'-0"

SCALE 1/4" = 1'-0"

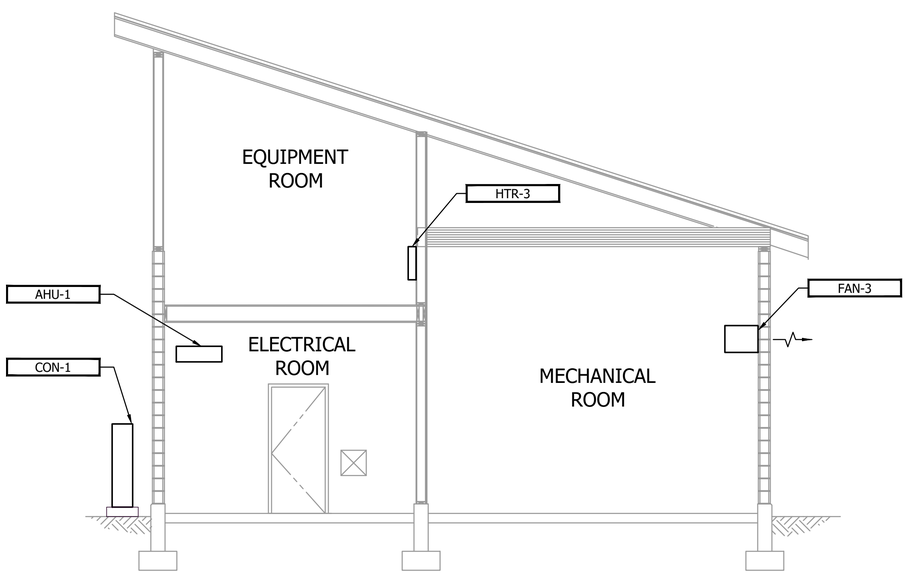

SECTION A

1/4"=1'-0"

NOTES:

1. UNLESS NOTED OTHERWISE ALL DUCT SHALL BE ALUMINUM OR GALVANIZED STEEL IN ACCORDANCE WITH SMACNA.
2. EQUIPMENT SHALL BE AS SHOWN IN THE 23 81 10 SCHEDULE, OR APPROVED EQUAL. INSTALL IN ACCORDANCE WITH ALL APPLICABLE CODES, STANDARDS AND MANUFACTURES INSTRUCTIONS.

(3) FAN RUNS ON MANUAL TIMER.

4. INSTALL FLEXIBLE DUCT CONNECTIONS AT ALL FAN INLET AND OUTLET CONNECTIONS AT EACH AHU AND MIXING BOXES.
5. SEE 08 91 00 FOR LOUVER SIZES AND LOCATIONS.

(6) THERMOSTAT FOR FAN-3

Call 811 two business days before you dig

SHEET 184 OF 226

BID SET

CAD NO.

NO.	REVISIONS	INT.	APP.	DATE

ACTION	BY	DATE
DESIGNED	AM	04/11/25
DRAWN	DP	04/11/25
CHECKED (FIELD)		
CHECKED (HDQTS.)		

BRIAN E BUNKER STATE OF WASHINGTON 46055 REGISTERED PROFESSIONAL ENGINEER 4/11/2025

REGISTERED STAMP

WASHINGTON STATE PARKS AND RECREATION COMMISSION

NISQUALLY STATE PARK

PHASE 3A MAINTENANCE BUILDING AND WWTF

HVAC FLOOR PLANS AND SECTION

B-M4.0

SCALE

AS NOTED

PARKS FILE#

U:\PSO\Project\Clients\4763-RW Droll\216-4763-010 Nisqually\ParkWWOptions\99Svcs\CADD\DWG\PS18062A-M4.0.dwg
Apr-11-25 9:55am

NOTES:

1. FOR PIPING MATERIALS SPECIFICATIONS AND ABBREVIATIONS SEE DIVISION 40 TECHNICAL SPECIFICATIONS.
2. FOR ALL PIPE PENETRATIONS THROUGH FLOOR SEE DETAIL 5 SHEET B-M3.5.
3. SLOPE ALL DRAIN PIPES 1/4" PER FOOT MIN.
4. CLEANOUTS AND VENTS FOR HORIZ DRAINAGE PIPES SHALL BE PROVIDED IN ACCORDANCE WITH APPLICABLE PLUMBING CODE.

CONSTRUCTION NOTES:

1. ROUTE VENT STACKS THROUGH ROOF, CONNECT VENT FROM UTILITY SINK AND TRENCH DRAIN USING COMBINED VENT STACK.
2. ROUTE EYE WASH DRAIN TO TRENCH DRAIN. USE SCH 40 PVC PIPE.
3. INSTALL BUSHINGS AS REQD FOR FOR DRAIN CONNECTIONS.

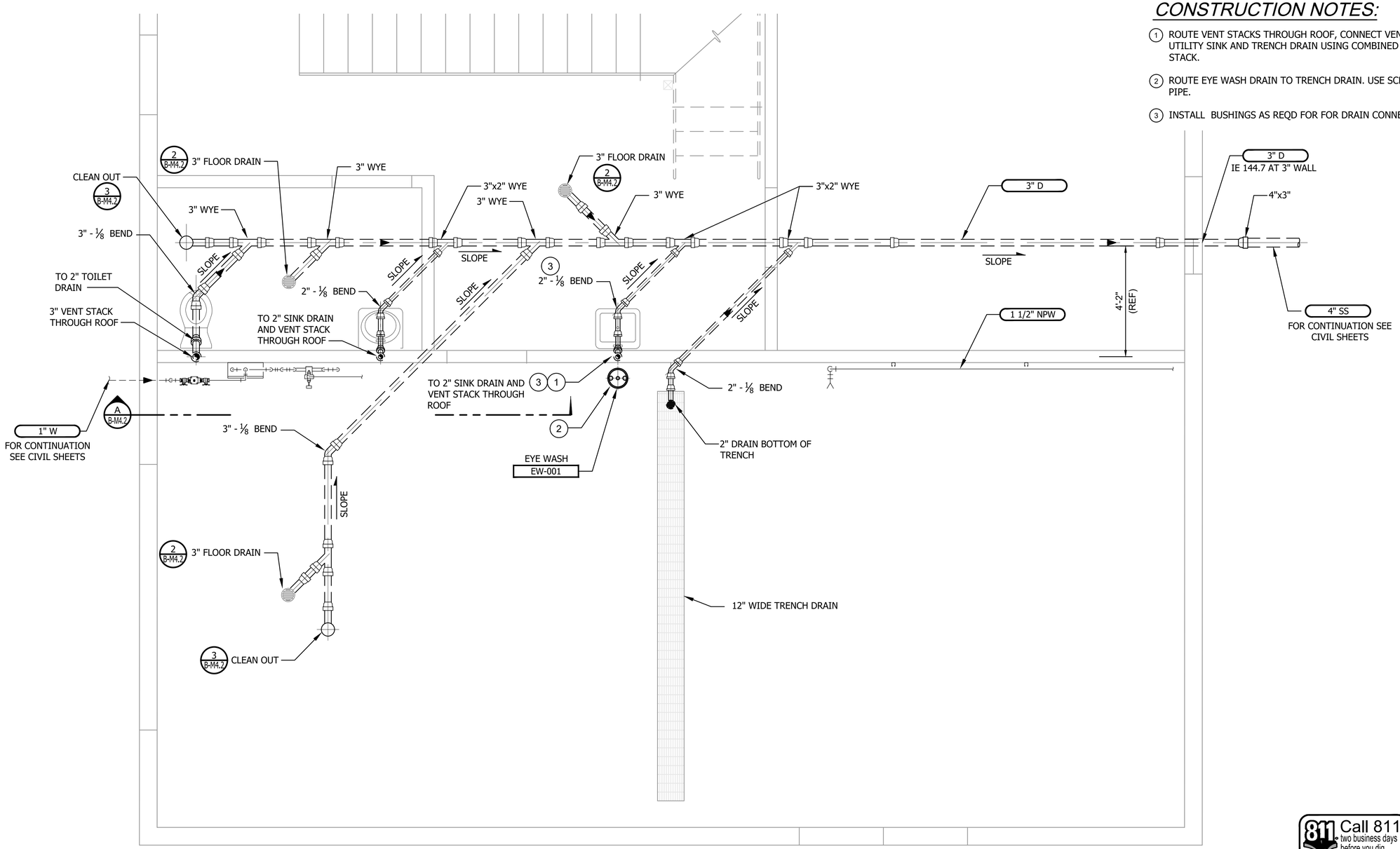

PLAN

SCALE 1/2" = 1'-0"

BID SET

Call 811 two business days before you dig

SHEET 185 OF 226

CAD NO.		
	DATE	
	APP.	
	INT.	
	REVISIONS	
	NO.	

ACTION	BY	DATE
DESIGNED	SW	04/11/25
DRAWN	KT	04/11/25
CHECKED (FIELD)		
CHECKED (HDQTS.)		

SCOTT WEIRICH STATE OF WASHINGTON 20122702 REGISTERED PROFESSIONAL ENGINEER 4/11/2025

REGISTERED STAMP

WASHINGTON STATE PARKS AND RECREATION COMMISSION

NISQUALLY STATE PARK

PHASE 3A MAINTENANCE BUILDING AND WWTF

OPERATIONS BUILDING PLUMBING PLAN

B-M4.1

SCALE

AS NOTED

PARKS FILE#

U:\PSO\Project\Clients\4763-RW Droll\216-4763-010 Nisqually\ParkWWOptions\99Svcs\CADD\DWG\PS18062A-M4.1.dwg
Apr-11-25 9:43am

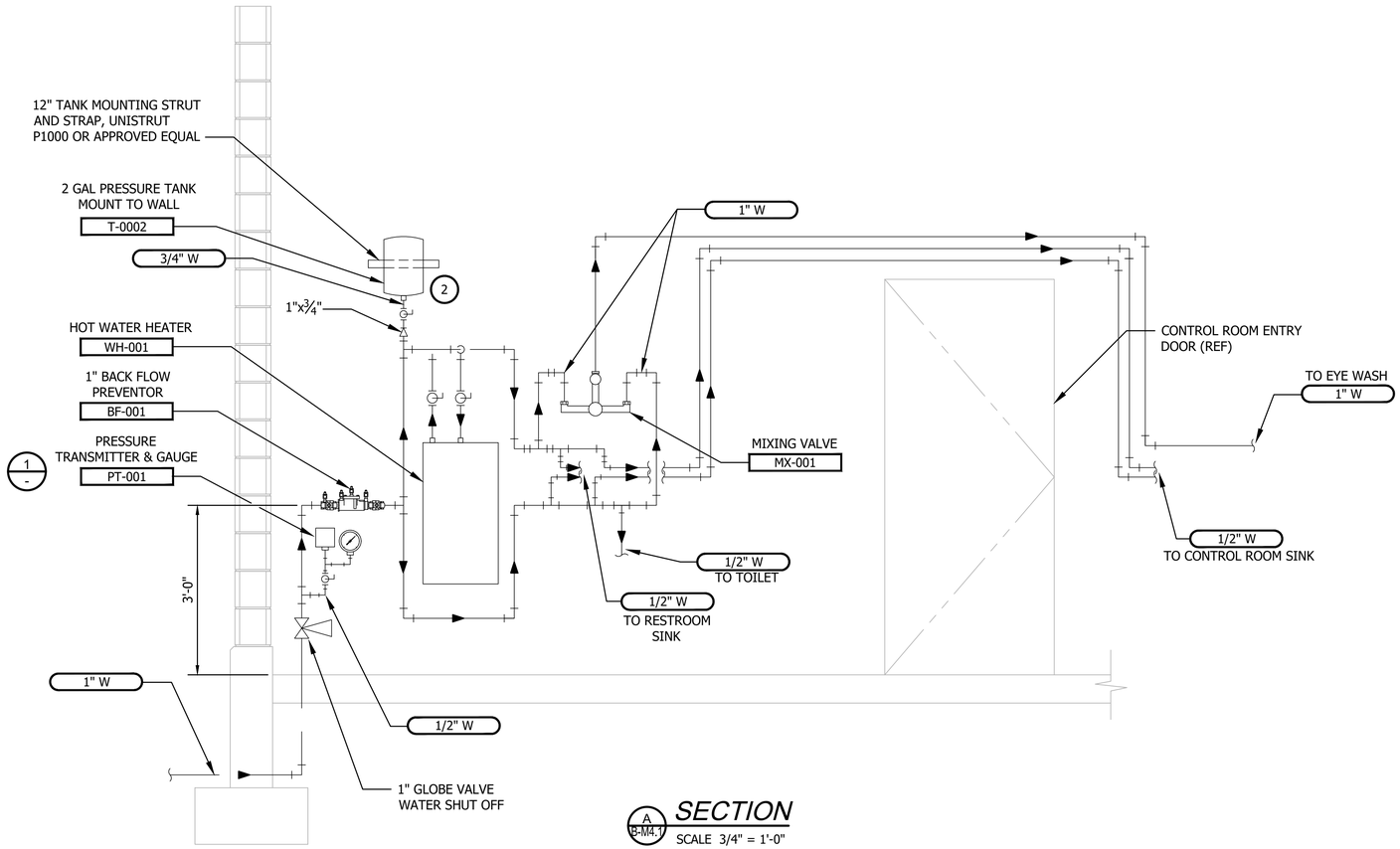

A
B-M4.1
SECTION
SCALE 3/4" = 1'-0"

NOTES:

1. FOR PIPING MATERIALS SPECIFICATIONS AND ABBREVIATIONS SEE DIVISION 33 TECHNICAL SPECIFICATIONS.
2. CONTRACTOR SHALL LOCATE UNIONS AS REQUIRED FOR EASE OF ASSEMBLY, NOT SHOWN FOR CLARITY.
3. ROUTE POTABLE WATER IN WALL INTERIOR WHERE PRACTICAL (NOT SHOWN). LOCATE EQUIPMENT AND VALVES EXPOSED FOR MAINTENANCE AND OPERATION.

CONSTRUCTION NOTES:

1. FURNISH HUB AS REQD TO CONNECT TO DRAIN PIPING.
2. COORDINATE LOCATION OF PRESSURE TANK WITH UNIT HEATER.

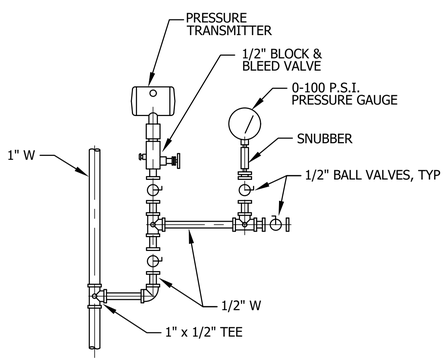

NOTES:
1. ORIENTATION MAY VARY, SEE PLAN SHEETS.

INSTALLATION DETAIL
1
-
SCALE : NONE

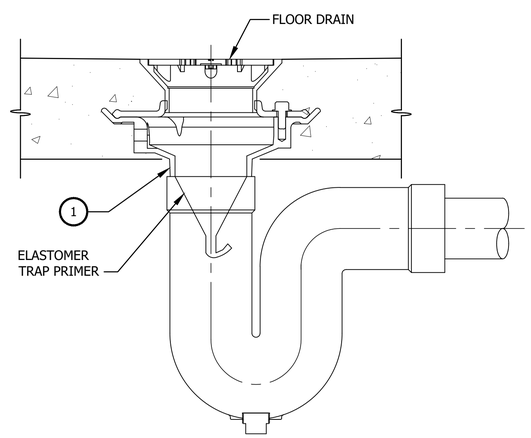

DRAIN DETAIL
2
B-M4.1
SCALE : NONE

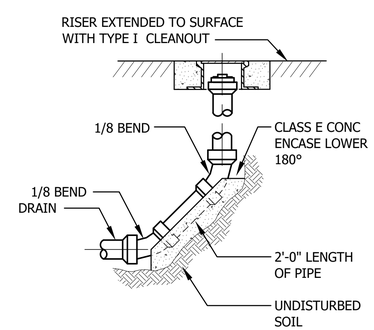

CLEANOUT DETAIL
3
B-M4.1
SCALE : NONE

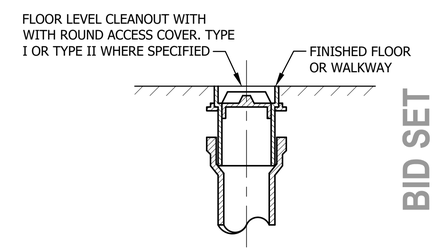

NOTE:
TYPE I CLEANOUT IS FOR FINISHED CONCRETE FLOORS.
TYPE II CLEANOUT IS FOR CONCRETE FLOORS WITH FLOOR COVERING.

CLEANOUT DETAIL
4
B-M4.1
SCALE : NONE

BID SET

811 Call 811 two business days before you dig

SHEET 186 OF 226

CAD NO.

NO.	REVISIONS	INT.	APP.	DATE

ACTION	BY	DATE
DESIGNED	SW	04/11/25
DRAWN	KT	04/11/25
CHECKED (FIELD)		
CHECKED (HDQTS.)		

4/11/2025

REGISTERED STAMP

WASHINGTON STATE PARKS AND RECREATION COMMISSION

NISQUALLY STATE PARK

PHASE 3A MAINTENANCE BUILDING AND WWTF OPERATIONS BUILDING PLUMBING SECTION & DETAILS

B-M4.2

SCALE
AS NOTED

PARKS FILE#

U:\PSO\Projects\Clients\4763-RW Droll\216-4763-010 NisquallyParkWWOptions\99Svcs\CADD\DWG\PS18062A-M4.2.dwg
Apr-11-25 9:57am

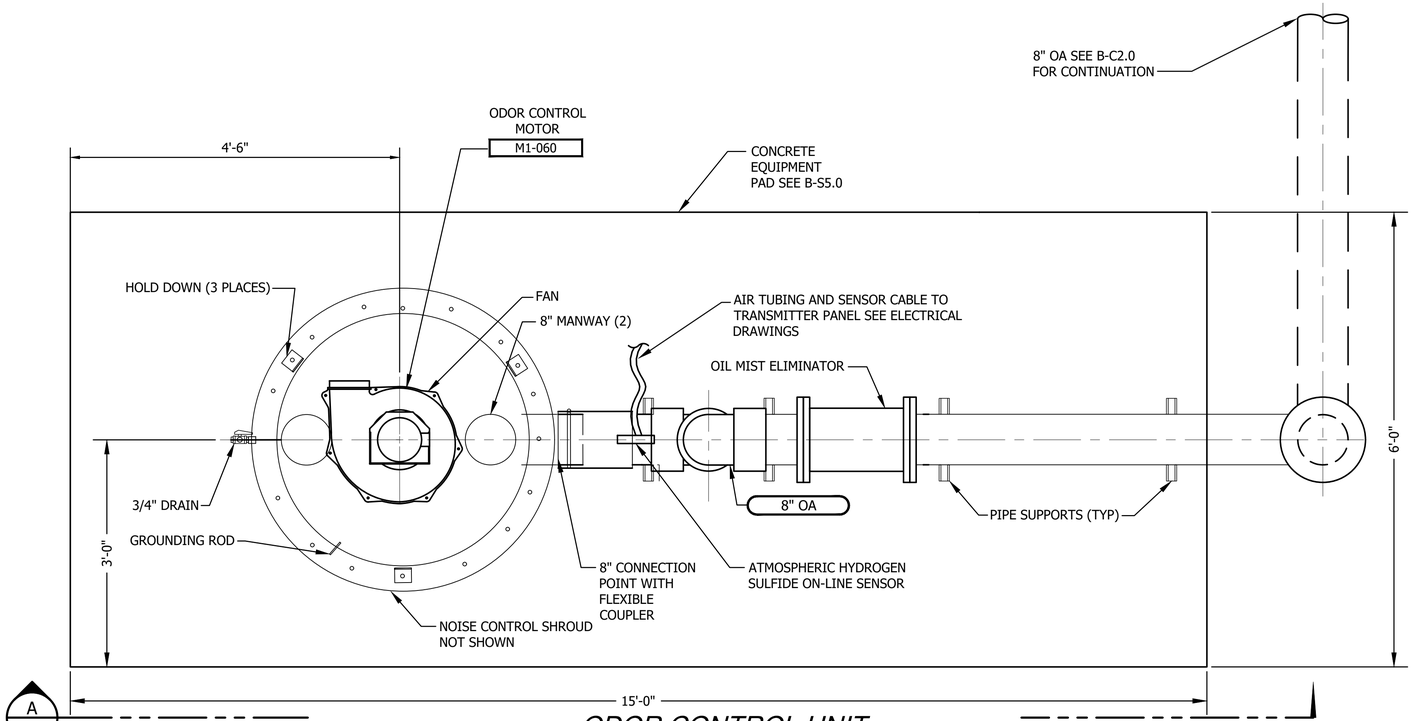

A
-

ODOR CONTROL UNIT

A
B-C2.0 PLAN
SCALE 1" = 1'-0"

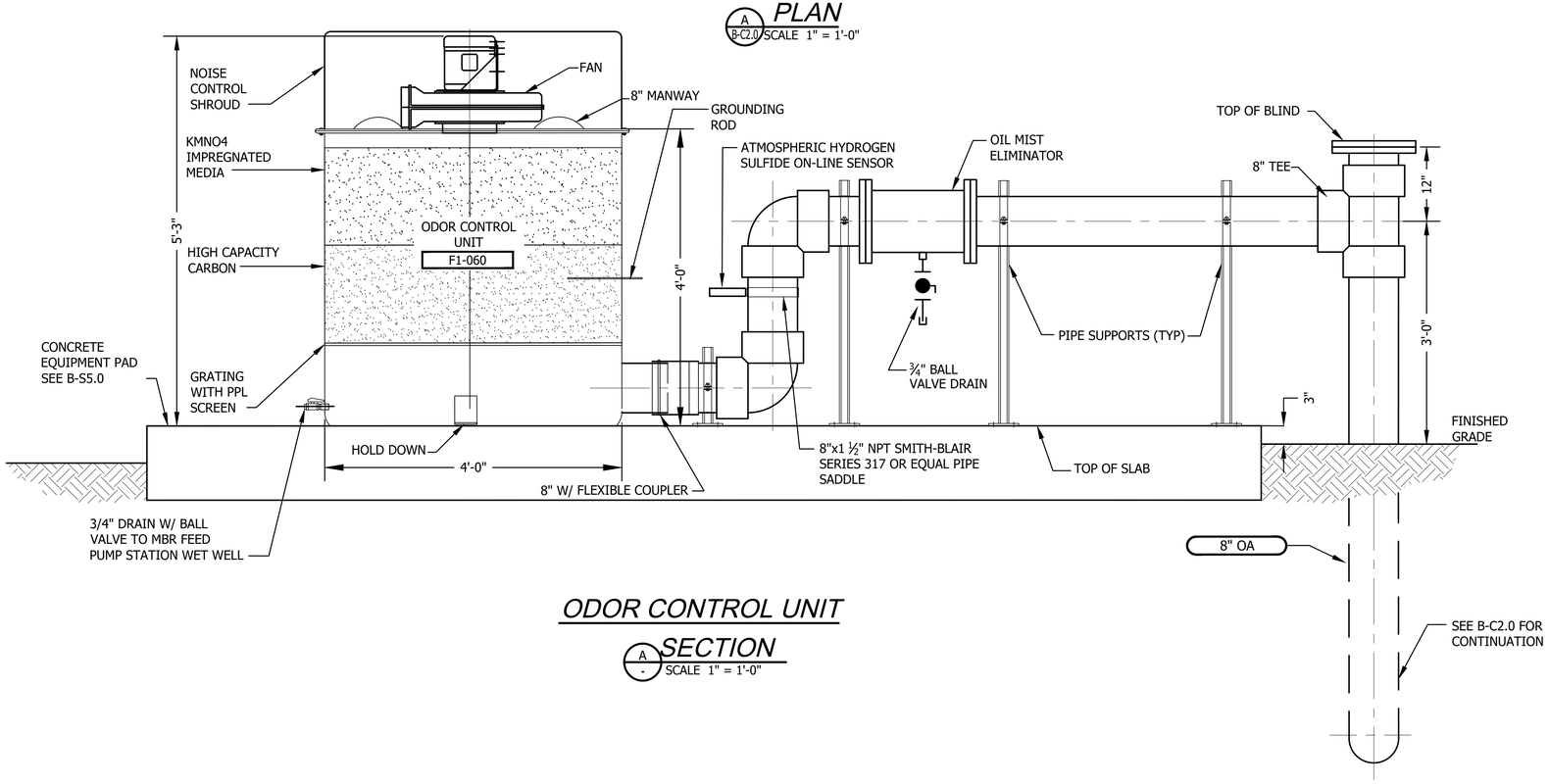

ODOR CONTROL UNIT

A
- SECTION
SCALE 1" = 1'-0"

Call 811
two business days
before you dig

SHEET 187 OF 226

BID SET

CAD NO.		
		DATE
		APP.
		INT.
		REVISIONS
		NO.

ACTION	BY	DATE
DESIGNED	TS	04/11/25
DRAWN	KT	04/11/25
CHECKED (FIELD)		
CHECKED (HDQTS.)		

BRIAN E BUNKER
STATE OF WASHINGTON
46055
REGISTERED
PROFESSIONAL ENGINEER
4/11/2025

REGISTERED STAMP

WASHINGTON
STATE
PARKS
AND
RECREATION
COMMISSION

NISQUALLY
STATE PARK

PHASE 3A
MAINTENANCE
BUILDING
AND WWTF

MBR ODOR CONTROL
TREATMENT SYSTEM
PLAN AND SECTION

B-M5.0

SCALE
AS NOTED

PARKS FILE#

U:\PSO\Projects\Clients\4763-RW Droll\216-4763-010 Nisqually\ParkWWOptions\99Svcs\CADD\DWG\PS18062A-M5.0.dwg
Apr-11-25 10:09am

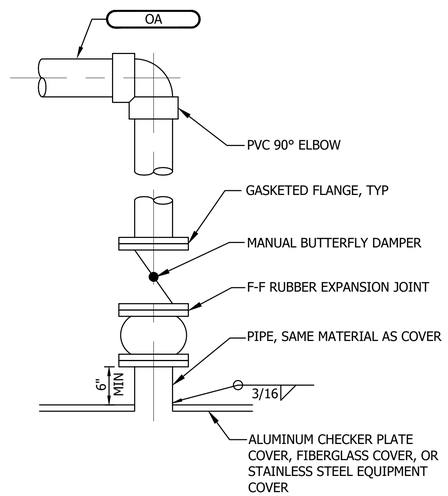

COVER CONNECTION DETAIL
1 NTS

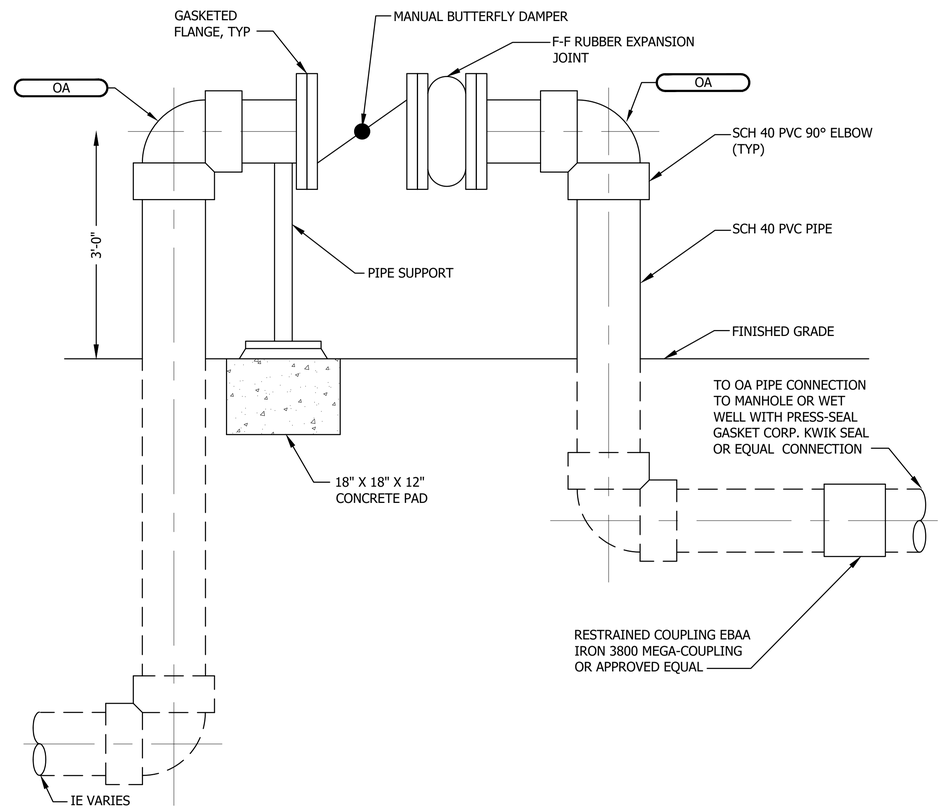

MANHOLE AND PUMP STATION CONNECTION DETAIL
2 NTS

BID SET

Call 811 two business days before you dig

SHEET 188 OF 226

CAD NO.

NO.	REVISIONS	INT.	APP.	DATE

ACTION	BY	DATE
DESIGNED	TS	04/11/25
DRAWN	KT	04/11/25
CHECKED (FIELD)		
CHECKED (HDQTS.)		

BRIAN E BUNKER STATE OF WASHINGTON 46055 REGISTERED PROFESSIONAL ENGINEER
4/11/2025
REGISTERED STAMP

WASHINGTON STATE PARKS AND RECREATION COMMISSION

NISQUALLY STATE PARK

PHASE 3A MAINTENANCE BUILDING AND WWTF

MBR ODOR CONTROL PIPING DETAILS

B-M5.1

SCALE
NO SCALE

PARKS FILE#

U:\PSO\Projects\Clients\4763-RW Droll\216-4763-010 Nisqually PorkWWOptions\99Svcs\CADD\DWG\PS180620-M5.1.dwg
Apr-11-25 10:08am

ABBREVIATIONS

a	CIRCUIT BREAKER AUX. CONTACT, CLOSED WHEN BREAKER IS CLOSED
A	AMMETER, AMPERES
AC	ALTERNATING CURRENT
A/D	ANALOG TO DIGITAL
ADJ	ADJUSTABLE
AF	AMPERE FRAME
AFD	ADJUSTABLE FREQUENCY DRIVE
AFF	ABOVE FINISH FLOOR
AFG	ABOVE FINISH GRADE
AIC	AMPERES INTERRUPTING CAPACITY
AL	ALUMINUM
ALT	ALTERNATOR
AMP	AMPERES
ANN	ANNUNICATOR
APPROX	APPROXIMATE
AS	AMMETER SWITCH
AT	AMMETER TRIP
ATS	AUTOMATIC TRANSFER SWITCH
AUTO	AUTOMATIC
AUX	AUXILIARY
AWG	AMERICAN WIRE GAGE
b	CIRCUIT BREAKER AUX. CONTACT, CLOSED WHEN BREAKER IS OPEN
BCG	BARE COPPER GROUND
BLDG	BUILDING
C	CONDUIT
CAB	CABINET
CAP	CAPACITOR
CB	CIRCUIT BREAKER
CC	CONTROL CABLE, CLOSING COIL
CHH	COMMUNICATION HANDHOLE
CC	CLARIFIER CONSOLE
CL	CHLORINE
CKT	CIRCUIT
CMH	COMMUNICATION MANHOLE
CO	CONDUIT ONLY
COMM	COMMUNICATION
COND	CONDUCTOR
CONT	CONTINUED, CONTINUATION
CPT	CONTROL POWER TRANSFORMER
CP	CONTROL PANEL
CR	CONTROL RELAY
CS	CONTROL STATION
CT	CURRENT TRANSFORMER
DB	DIRECT BURIAL
DC	DIRECT CURRENT
DIA	DIAMETER
DIAG	DIAGRAM
DISC	DISCONNECT
DISTR	DISTRIBUTION
DN	DOWN
DP	DISTRIBUTION PANEL
DPDT	DOUBLE POLE, DOUBLE THROW
DPST	DOUBLE POLE, SINGLE THROW
DWG	DRAWING
(E)	EXISTING
EA	EACH
EF	EXHAUST FAN
EHH	ELECTRICAL HANDHOLE
EL	ELEVATION
ELEC	ELECTRIC, ELECTRICAL
ELEM	ELEMENTARY
EMERG	EMERGENCY
ENCL	ENCLOSURE
EFFL	EFFLUENT
EQ	EQUAL
EQPT	EQUIPMENT
ETM	ELAPSED TIME METER
FDR	FEEDER
FLEX	FLEXIBLE
FLUOR	FLUORESCENT
FREQ	FREQUENCY
FT	FEET, FOOT
FU	FUSE
FUT, (F)	FUTURE
FVNR	FULL VOLTAGE, NON REVERSING
FVR	FULL VOLTAGE, REVERSING
FWD	FORWARD
GA	GAUGE
GALV	GALVANIZED
GEN	GENERATOR
GFI	GROUND FAULT INTERRUPTER
GND	GROUND
GRS	GALVANIZED RIGID STEEL
H_2O_2	HYDROGEN PEROXIDE
HH	HANDHOLE
HMI	HUMAN MACHINE INTERFACET
HOA	HAND-OFF-AUTOMATIC
HOR	HAND-OFF-REMOTE
HORIZ	HORIZONTAL
HP	HORSEPOWER
HPS	HIGH PRESSURE SODIUM
HTR	HEATER
HV	HIGH VOLTAGE
HZ	HERTZ (CYCLES PER SECOND)
IND LT	INDICATING LIGHT
INCAND	INCANDESCENT
INSTR	INSTRUMENT, INSTRUMENTATION
I/O	INPUT/OUTPUT
JB	JUNCTION BOX
KA	KILOAMPERES
KCMIL	THOUSANDS OF CIRCULAR MILS
KV	KILOVOLTS
KVA	KILOVOLT AMPERES
KVAR	KILOVOLT AMPERES REACTIVE
KVARH	KILOVOLT AMPERES REACTIVE HOURS
KW	KILOWATTS
KWH	KILOWATT HOURS
LCS	LOCAL CONTROL STATION
LTG	LIGHTING
LTS	LIGHTS
LP	LIGHTING PANEL
(M)	MODIFIED
mA	MILLIAMPERES
MAX	MAXIMUM
MBR	MEMBRANE BIOREACTOR
MCC	MOTOR CONTROL CENTER
MCP	MOTOR CIRCUIT PROTECTION OR MAIN CONTROL PANEL
MFR	MANUFACTURER
MH	MANHOLE
MIN	MINIMUM
MISC	MISCELLANEOUS
MOV	MOTOR OPERATED VALVE
MS	MOTOR STARTER
MTD	MOUNTED
MTG	MOUNTING
MTS	MANUAL TRANSFER SWITCH
(N)	NEW
NC	NORMALLY CLOSED
NEMA	NATIONAL ELECTRICAL MANUFACTURER'S ASSOC.
NEUT	NEUTRAL
NIC	NOT IN CONTRACT
NO	NORMALLY OPEN, NUMBER
NTS	NOT TO SCALE
OCP	OZONE CONTROL PANEL
OH	OVERHEAD
OT	OVER TEMPERATURE
OVLD	OVERLOAD, OVERLOAD RELAY
PBSW	PUSHBUTTON SWITCH
PEC	PHOTOELECTRIC CELL
PF	POWER FACTOR
pH	MEASURE OF ACIDITY OR ALKALINITY
PH	PHASE
PIOP	PLC I/O PANEL
PLC	PROGRAMMABLE LOGIC CONTROLLER
PNL	PANEL
PNLBD	PANELBOARD
POSN	POSITION
PRI	PRIMARY
PS	PRESSURE SWITCH
PSE	PUGET SOUND ENERGY
PSI	POUNDS PER SQUARE INCH
PVC	POLYVINYL CHLORIDE
PWR	POWER
(R)	RELOCATED
RCPT	RECEPTACLE
RCT	REPEAT CYCLE TIMER
REQD	REQUIRED
RM	ROOM
RPM	REVOLUTIONS PER MINUTE
RT	RESET TIMER
SCR	SILICON CONTROLLED RECTIFIER
SD	SMOKE DETECTOR
SEC	SECONDS, SECONDARY
SECT	SECTION
SF	SUPPLY FAN
SH	SHEET
SIG	SIGNAL
SN	SOLID NEUTRAL
SPEC	SPECIFICATION
SPDT	SINGLE POLE, DOUBLE THROW
SS	STAINLESS STEEL
STP	SHIELDED TWISTED PAIR
SW	SWITCH
SWBD	SWITCHBOARD
SWGR	SWITCHGEAR
SYNC	SYNCHRONIZING
TB	TERMINAL BOX
TC	TELEPHONE CABINET
TEL	TELEPHONE
TEMP	TEMPERATURE
TERM	TERMINAL
TO	TIMED OPENING
TOA	TEST-OFF-AUTOMATIC
TYP	TYPICAL
UGND	UNDERGROUND
UH	UNIT HEATER
UON	UNLESS OTHERWISE NOTED
V	VOLTS
VA	VOLT-AMPERES
VAR	VOLT AMPERES REACTIVE
VERT	VERTICAL
VH	VAR-HOUR
VS	VOLTMETER SWITCH
W	WIRE, WATTS
WH	WATTHOUR METER
WHDM	WATTHOUR DEMAND METER
WP	WEATHERPROOF IN USE
WR	WEATHER RESISTANT
WT	WATERTIGHT
WWR	WASHWATER RECOVERY
XFMR	TRANSFORMER
XP	EXPLOSION PROOF

PLAN SYMBOLS

- P — UNDERGROUND MEDIUM VOLTAGE 1Ø POWER
- PP — UNDERGROUND MEDIUM VOLTAGE 3Ø POWER
- SP — SP — SECONDARY POWER
- G — GROUND GRID, DIRECT BURIAL
- T — UNDERGROUND TELEPHONE
- UNDERGROUND DUCT LINE (CONC. ENCASEMENT)
- UNDERGROUND DIRECT BURIAL CONDUITS
- CONDUIT CONCEALED IN WALL OR CEILING
- CONDUIT CONCEALED IN FLOOR
- EXPOSED CONDUIT
- ¾"C-3#12 — CALLOUT INDICATING CONDUIT SIZE, NUMBER OF WIRES AND WIRE SIZE
- PXXX — CALLOUT INDICATING CONDUIT PER SCHEDULE
- CONDUIT RUN, HATCH MARKS INDICATE NUMBER OF #12 CONDUCTORS, NO HATCH MARKS IS (2) #12 AND (1) #12 GND
- HOME RUN TO PANELBOARD OR AS INDICATED
- FLEXIBLE CONDUIT
- CONDUIT RUN, BROKEN AND CONTINUED SAME SHEET OR AS NOTED
- CONDUIT WITH SEAL FITTING
- CAP ON CONDUIT STUB
- OPEN CIRCLE DENOTES UPWARD CONDUIT RISER
- SOLID CIRCLE DENOTES DOWNWARD CONDUIT RISER
- INDICATES REMOVAL
- WIRING INSIDE ENCLOSURE
- CONDUCTORS CONNECTED
- UTILITY METER
- LOCAL CONTROL STATION
- 30A(F-20A) — CONTROL STATION W/SAFETY SWITCH (SEE NOTE P4)
- MV — MOTORIZED VALVE OPERATOR
- # — MOTOR- APPROX. HP INDICATED
- 30A(F-20A) — SAFETY SWITCH (SEE NOTE P4)
- 30A(F-20A) — COMBINATION MOTOR STARTER AND SAFETY SWITCH (SEE NOTE P4)
- S MS — MANUAL MOTOR STARTER
- GROUND ROD AND BOX
- MH HH — MANHOLE OR HANDHOLE
- EQUIPMENT CONNECTION
- INSTRUMENT
- MCC-D — EQUIPMENT ID #
- T — THERMOSTAT
- (a,b) — SINGLE POLE SWITCH (SEE NOTES P2 & P3) * 2 = 2 POLE, 3 = 3 WAY, 4 = 4 WAY, K = KEY OPERATED, WP = WEATHERPROOF, D = DIMMER, P = SWITCH WITH PILOT LIGHT, M = HP RATED, LOCKABLE
- MOTOR xx = HORSEPOWER
- A (a,b) — INCANDESCENT LIGHT FIXTURE - () = CKT. NO. SEE LIGHTING FIXTURE SCHEDULE
- OB2 10a — FLUORESCENT LIGHT FIXTURE - SEE LIGHTING FIXTURE SCHEDULE CKT NO. SHOWN WITHIN
- EMEX — EMERGENCY LIGHT WITH SELF CONTAINED BATTERY
- SINGLE RECEPTACLE, 120V
- SINGLE RECEPTACLE, 208V/240V
- CKT TYPE — DUPLEX WALL RECEPTACLE, 120V, WP = WEATHERPROOF, G = GROUNDED, IG = ISOLATED GROUND, GF = GROUND FAULT INTERRUPTER
- DUPLEX FLOOR RECEPTACLE, 120V
- TWO DUPLEX RECEPTACLES
- X IN. — MULTI-OUTLET ASSEMBLY WITH SINGLE RECEPTACLE, 120V SPACING (X INCHES) AS NOTED MOUNTING HEIGHT AS NOTED
- SPECIAL PURPOSE WALL RECEPTACLE, RATING AS NOTED
- J — FLOOR, WALL AND CEILING JUNCTION BOXES
- COMPUTER NETWORK JACK
- DATA/TELEPHONE JACK
- WALL TELEPHONE OUTLET (+12")
- WALL TELEPHONE OUTLET (+60")
- FLOOR TELEPHONE OUTLET
- F — FIRE ALARM PULL STATION
- F — FIRE ALARM FLASHING LIGHT
- F — FIRE ALARM HORN
- B — BELL/BUZZER
- SH — COMBINATION SMOKE/HEAT DETECTOR
- H — HEAT DETECTOR
- S — SMOKE DETECTOR
- I — INTRUSION SWITCH
- FACP — FIRE ALARM CONTROL PANEL
- LS — LIMIT SWITCH

PLAN SYMBOL NOTES

P1 CONDUIT SIZE AND FILL SHALL BE AS INDICATED. WHERE NO SIZE IS SHOWN, THE CONDUIT SHALL BE SIZED IN ACCORDANCE WITH THE EDITION OF THE NATIONAL ELECTRICAL CODE ADOPTED BY THE AUTHORITY HAVING CODE ENFORCEMENT JURISDICTION. WHERE NO FILL IS INDICATED, PROVIDE (3) #12 WIRES. PROVIDE 3/16 INCH NYLON PULL ROPE IN EACH EMPTY CONDUIT.

P2 LOWER CASE LETTERS IN PARENTHESIS ADJACENT TO A SWITCH OR LIGHT FIXTURE INDICATE A SWITCHED CIRCUIT AND IDENTIFY THE FIXTURE/SWITCH COMBINATIONS. FOR FOUR LAMP FLUORESCENT FIXTURES WIRED IN PAIRS WITHIN EACH FIXTURE, THE "a" SWITCH CONTROLS THE OUTER LAMPS AND THE "b" SWITCH CONTROLS THE INNER LAMPS. WIRE 3 LAMP FIXTURES SIMILARLY.

P3 NUMBERS IN PARENTHESIS ADJACENT TO A LIGHT FIXTURE OR RECEPTACLE INDICATE THE LIGHTING PANEL BRANCH CIRCUIT FEEDING THE DEVICE.

P4 NUMBER INDICATES THE AMPERAGE RATING OF THE SWITCH. IDENTIFIERS IN PARENTHESIS INDICATE THAT THE SWITCH IS PROVIDED WITH FUSES AND THE AMPERAGE RATING OF THE FUSE(S).

SINGLE LINE SYMBOLS

- GROUND CONNECTION
- SWITCH, 3 POLE EXCEPT WHERE NOTED. RATING IN AMPERES AS NOTED (NOTE 1)
- AUTOMATIC TRANSFER SWITCH 3 POLE, RATING AS NOTED
- SV — SHUNT TRIP
- FUSE
- FUSE CUTOUT
- 0MCP 00AT / 000AF 000AT — CIRCUIT BREAKER, 3 POLE EXCEPT WHERE NOTED. RATING IN AMPERES AS NOTED. IF TWO RATINGS APPEAR (EG. 100/625) THEN DEVICE IS MCP; NUMERATOR IS CONTINUOUS CURRENT RATING & DENOMINATOR IS INSTANTANEOUS TRIP SETTING.
- POWER CIRCUIT BREAKER DRAWOUT ABOVE 1500V RATING AS NOTED
- SURGE ARRESTER
- CURRENT TRANSFORMER
- VOLTAGE TRANSFORMER
- POWER OR DISTRIBUTION TRANSFORMER RATING AS NOTED
- 7.5 — MOTOR. NUMBER INDICATES HORSEPOWER
- EQUIPMENT NAME / EQUIPMENT ID #
- G — GENERATOR
- A — CONTROL PACKAGE PROVIDED WITH THE DRIVEN EQUIPMENT
- BUS STAB ON MCC OR SWITCHGEAR, CORD & PLUG CONNECTION FOR MOTORS
- THERMAL OVERLOAD
- * — * A - AMMETER, V - VOLTMETER, WH - WATTHOUR METER, GS - GROUND FAULT SENSOR
- AS — AMMETER SWITCH
- VS — VOLTMETER SWITCH
- 3 — ELEMENTARY DIAGRAM NUMBER
- K — KIRK KEY INTERLOCK
- POWER RECEPTACLE FOR PORTABLE EQUIPMENT
- # — RELAY DEVICE FUNCTION, # PER ANSI NUMBER C37.2
- TERMINATOR/POTHEAD
- SPLICE, TERMINATION
- LUGS
- 1* — MOTOR STARTER. NUMBER * INDICATES NEMA SIZE (NONE) FULL VOLTAGE NONREVERSING, A = AUTOTRANSFORMER REDUCED VOLTAGE, SS = SOLID STATE, -2S = TWO SPEED
- CAPACITOR - KVAR INDICATED
- VACUUM BREAK SWITCH
- VFD ID ### — VARIABLE FREQUENCY DRIVE
- VFD ID ### — VARIABLE FREQUENCY DRIVE WITH BYPASS CONTACTOR, CONTACTOR NEMA SIZE AS INDICATED

LOOP WIRING / ELEMENTARY DIAGRAM SYMBOLS

- FUSE. RATING IN AMPERES
- M — MOTOR
- ETM — ELAPSED TIME METER
- 1 CR — CONTROL DEVICE COIL. PREFIX NUMBER, WHEN USED, DISTINGUISHES BETWEEN DEVICES OF THE SAME TYPE.
  - ALT - ALTERNATOR
  - CR - CONTROL RELAY
  - GR - GENERAL RELAY
  - ISR - INTRINSICALLY SAFE RELAY
  - LR - LATCH RELAY
  - SV - SOLENOID VALVE
  - PR - PROBE RELAY
  - TR - TIMING RELAY
  - TO - TIME DELAY RELAY
- W — INDICATING LIGHT
- W — PUSH-TO-TEST INDICATING LIGHT
- INDICATING LIGHT COLORS:
  - A - AMBER
  - B - BLUE
  - C - CLEAR
  - G - GREEN
  - R - RED
  - N - NEON
  - W - WHITE
  - Y - YELLOW
- TERMINAL
- OPEN CLOSED — SWITCH
- OPEN CLOSED — PUSHBUTTON,
- SWITCH, 3-POLE
- MULTI-POSITION SELECTOR SWITCH
- H O A — HAND-OFF-AUTOMATIC SWITCH
- H O R — HAND-OFF-REMOTE SWITCH
- CONTROL POWER TRANSFORMER
- 120 VAC
- MOTOR HTR — MOTOR HEATER
- GROUND CONNECTION
- OPEN CLOSED — CONTACT
- BUS STAB ON MCC, CORD & PLUG CONNECTION FOR MOTORS
- THERMAL OVERLOAD
- BUZZER
- HORN
- BELL
- 20A 3P — CIRCUIT BREAKER
- IN X — DISCRETE INPUT
- OUT X — DISCRETE OUTPUT
- CHX IN — ANALOG INPUT
- CHX OUT — ANALOG OUTPUT

SENSING SWITCHES		
CLOSE ON		SENSED VARIABLE
RISING	FALLING	
		FLOW
		LEVEL
		PRESSURE
		TEMPERATURE

LIMIT SWITCHES	
LS	CLOSE ON REACHING LIMIT
LS	CLOSE ON LEAVING LIMIT

TIMED CONTACTS			
SYMBOL	NORMAL	OPEN TO CLOSED	CLOSED TO OPEN
	OPEN	DELAYED	INSTANTANEOUS
	CLOSED	INSTANTANEOUS	DELAYED
	OPEN	INSTANTANEOUS	DELAYED
	CLOSED	DELAYED	INSTANTANEOUS

ELEMENTARY DIAGRAMS

E1 UNDERLINED WORDS SHOWN AT A PUSHBUTTON, LIGHT, SELECTOR SWITCH, ETC. INDICATE THE LEGEND PLATE REQUIREMENT FOR THAT PARTICULAR DEVICE. ANY ADDITIONAL NAMEPLATES ARE INDICATED ON ELEVATIONS WITH THE REQUIRED NAMEPLATE INSCRIPTIONS.

E2 "NORMAL" STATUS OF SWITCHES OR CONTACTS IS THE SHELF POSITION.

E3 NUMBERS AND LETTERS IDENTIFY DEVICE.

BID SET

GENERAL NOTES

G1 THESE DRAWINGS ARE DIAGRAMMATIC ONLY; EXACT LOCATIONS OF ELECTRICAL EQUIPMENT SHALL BE DETERMINED IN THE FIELD BY THE ENGINEER. THE INSTALLATION OF ALL EQUIPMENT SHOWN ON THESE DRAWINGS OR DESCRIBED IN THE SPECIFICATIONS SHALL CONFORM TO THE REQUIREMENTS SET FORTH IN THE LATEST EDITIONS OF ALL APPLICABLE CODES AND UTILITY COMPANY STANDARDS. CONTACT THE UTILITY COMPANY REPRESENTATIVES AND VERIFY THEIR REQUIREMENTS.

G2 THIS IS A GENERALIZED LEGEND SHEET. THIS CONTRACT MAY NOT USE ALL INFORMATION SHOWN.

G3 NOTIFY THE ENGINEER IMMEDIATELY IF CONFLICTS IN EQUIPMENT LOCATIONS ARE DISCOVERED OR IF PROBLEMS ARISE DUE TO FIELD CONDITIONS, LACK OF INFORMATION OR ANY OTHER REASON.

G4 INFORMATION SHOWN MAY NOT BE ALL INCLUSIVE. SEE ALSO ANSI C37.2, Y1.1, Y32.2, AND Y32.9.

G5 VERIFY ALL COLOR REQUIREMENTS BEFORE ORDERING MATERIALS.

G6 REFER TO THE MECHANICAL AND CIVIL DRAWINGS FOR CERTAIN CONTROL DIAGRAMS AND EXACT LOCATIONS OF MECHANICAL EQUIPMENT AND FOR CERTAIN CONNECTIONS TO BE MADE TO ELECTRICAL CIRCUITS.

G7 ITEMS SHOWN IN LIGHT ARE EXISTING OR SUPPLIED BY OTHERS.

811 Call 811 two business days before you dig

CAD NO.

	DATE
	APP.
	INT.
	REVISIONS
	NO.

ACTION	BY	DATE
DESIGNED	MC	04/11/25
DRAWN	JV	04/11/25
CHECKED (FIELD)		
CHECKED (HDQTS.)		

MARVIN C. CASANOVA — STATE OF WASHINGTON — 48989 — REGISTERED PROFESSIONAL ENGINEER — 4/11/2025

REGISTERED STAMP

WASHINGTON STATE PARKS AND RECREATION COMMISSION

NISQUALLY STATE PARK

PHASE 3A MAINTENANCE BUILDING AND WWTF

ELECTRICAL SYMBOLS, NOTES AND ABBREVIATIONS

B-E1.0

SCALE

NO SCALE

PARKS FILE#

U:\PSO\Projects\Clients\4763-RW Droll\216-4763-010 Nisqually\ParkWWOptions\99Svcs\CADD\DWG\PS180620-E1.0.dwg
Apr-11-25 8:37am

NOTE:
FLOAT JUNCTION BOXES MAY BE REDUCED SIZE APPLETON GRF SERIES WITH GRTB TERMINAL STRIP.

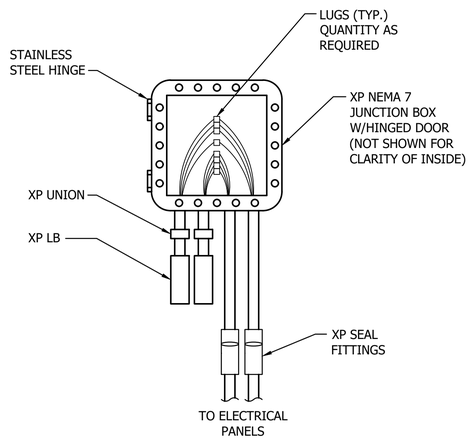

FRONT VIEW

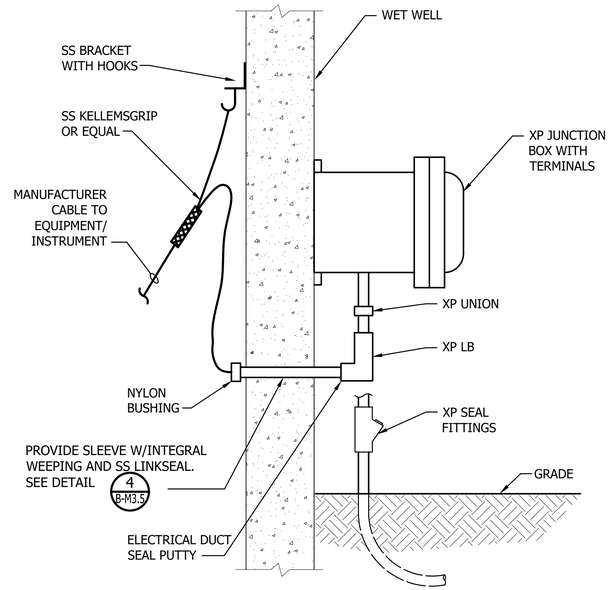

SIDE VIEW

EXPLOSION PROOF JUNCTION BOX DETAIL

A - NO SCALE

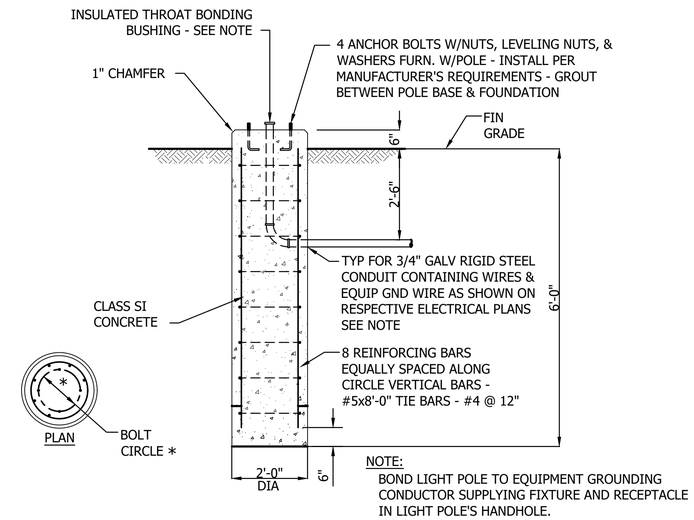

NOTE:
BOND LIGHT POLE TO EQUIPMENT GROUNDING CONDUCTOR SUPPLYING FIXTURE AND RECEPTACLE IN LIGHT POLE'S HANDHOLE.

LIGHTING FIXTURE FOUNDATION DETAIL

B - NO SCALE

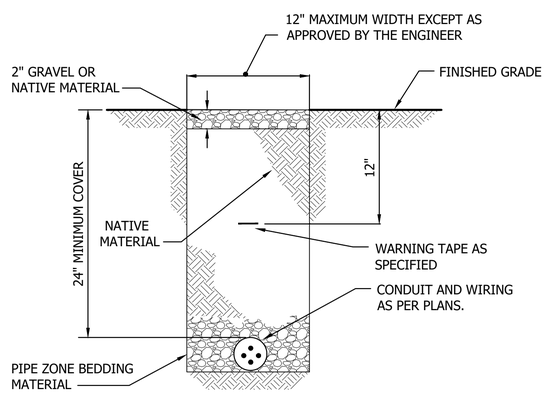

NOTE:
SEE DETAIL 1 B-C4.1

TYPICAL CONDUIT AND WIRING IN TRENCH DETAIL

C - NO SCALE

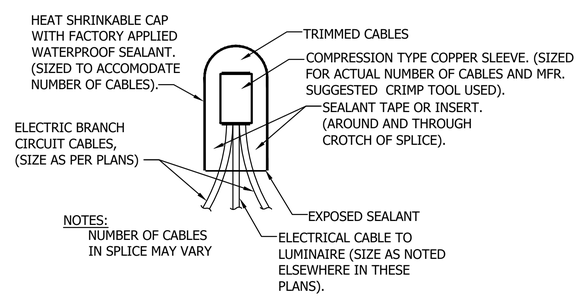

NOTES:
NUMBER OF CABLES IN SPLICE MAY VARY

SPLICING LUMINAIRES ELECTRICAL CABLES BASIC MATERIALS AND METHODS

D - NO SCALE

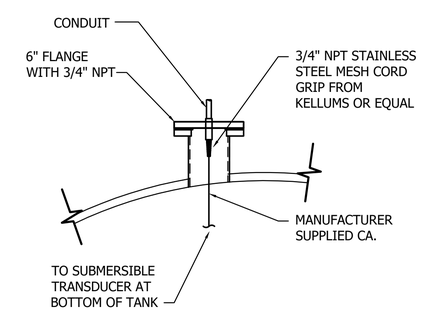

6" FLANGE ON NON POTABLE WATER TANK (FOR TRANSDUCER) DETAIL

E - NO SCALE

Call 811 two business days before you dig

SHEET 190 OF 226

BID SET

CAD NO.

NO.	REVISIONS	INT.	APP.	DATE

ACTION	BY	DATE
DESIGNED	MC	04/11/25
DRAWN	JV	04/11/25
CHECKED (FIELD)		
CHECKED (HDQTS.)		

MARVIN C. CASANOVA STATE OF WASHINGTON 48989 REGISTERED PROFESSIONAL ENGINEER 4/11/2025

REGISTERED STAMP

WASHINGTON STATE PARKS AND RECREATION COMMISSION

NISQUALLY STATE PARK

PHASE 3A MAINTENANCE BUILDING AND WWTF

ELECTRICAL DETAILS

B-E2.0

SCALE
NO SCALE

PARKS FILE#

U:\PSO\Projects\Clients\4763-RW Draft\216-4763-010 Nisqually Park WW Options\99Svcs\CADD\DWG\PS180620-E2.0.dwg
Apr-11-25 8:42am

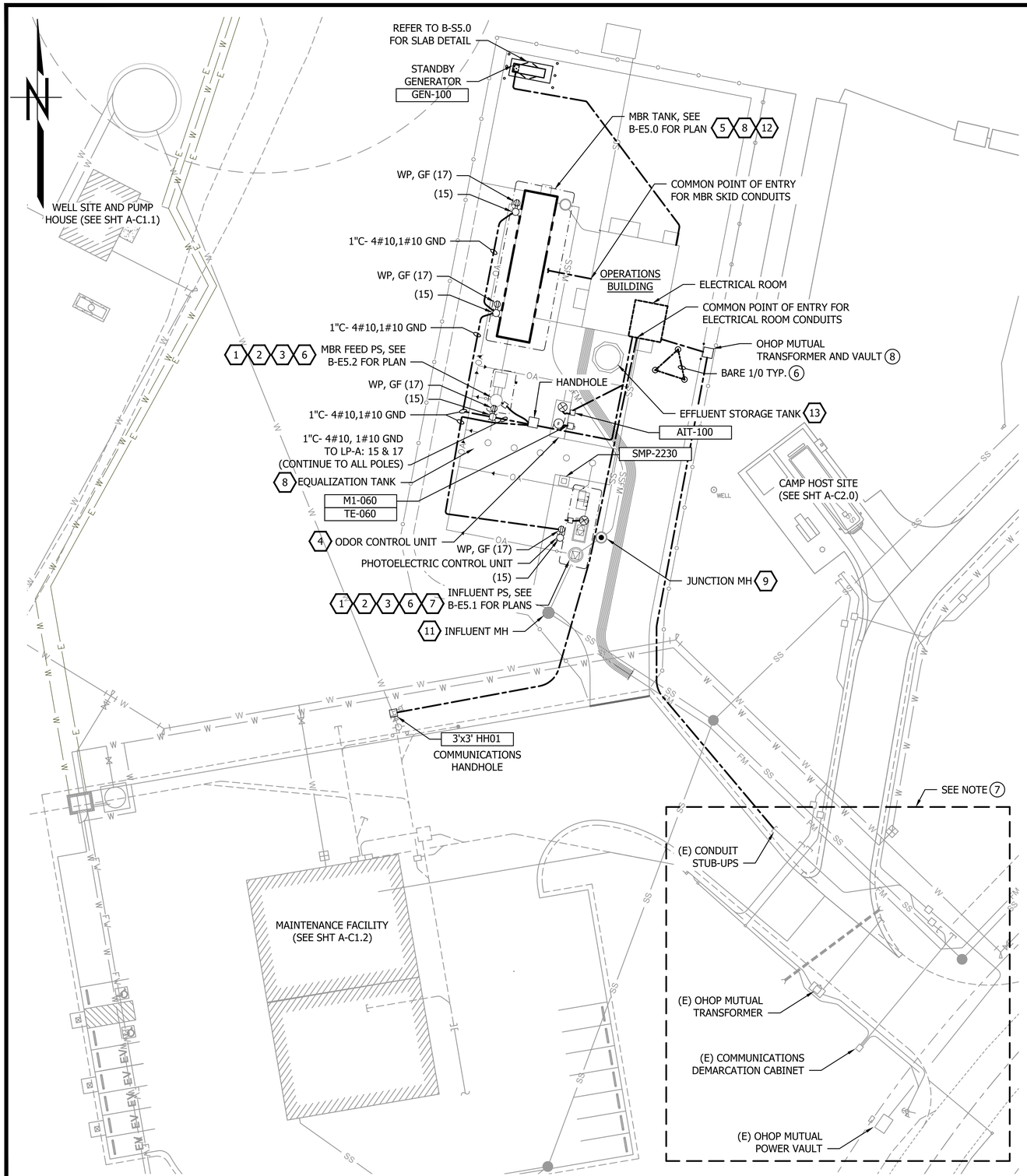

ELECTRICAL SITE PLAN

SCALE 1/2" = 1'-0"

NOTES:

1. PROVIDE POLELIGHT FOUNDATIONS PER DETAIL B, SHEET B-E2.0. SPLICE POLE LIGHT CIRCUIT PER DETAIL D, SHEET B-E2.0.
2. EXTERIOR CONDUIT SHALL BE INSTALLED 24" BELOW FINISHED GRADE.
3. MOUNT EQUIPMENT USING STAINLESS STEEL STRUT: PANELS AND INSTRUMENTS @ 66" A.F.G. TO TOP, TERMINAL BOXES AND DISCONNECT SWITCHES @ 48" A.F.G. TO TOP.
4. FOR SERVICE CONDUITS, EXCAVATE PER PROVIDER'S REQUIREMENTS, BRANCH CONDUITS EXCAVATE PER DETAIL C, SHEET B-E2.0.
5. COORDINATE WITH THE OWNER AND UTILITY FOR THE INSTALLATION OF THE UTILITY TRANSFORMER AND PRIMARY / SECONDARY CONDUCTORS.

6. SPACE GROUND RODS MIN 10' APART. BOND TO GROUNDING ELECTRODE SYSTEM AT ONE OF THE GROUND RODS.

7. ELECTRICAL CONDUIT PATH AT MAINTENANCE FACILITY DRIVEWAY IS DIAGRAMMATICAL. CONTRACTOR SHALL FIELD VERIFY CONDUIT FROM OHOP MUTUAL POWER VAULT TO STUB-UPS NEAR CAMP HOST SITE DRIVEWAY AND EXTEND CONDUIT FROM STUB-UP LOCATION TO THE OPERATIONS BUILDING'S OHOP MUTUAL TRANSFORMER AND VAULT.

8. METERING CABINET TO BE PROVIDED AND INSTALLED ON TRANSFORMER BY OHOP MUTUAL. CURRENT TRANSFORMERS TO BE PROVIDED AND INSTALLED IN TRANSFORMER'S SECONDARY COMPARTMENT BY OHOP MUTUAL.

TABLE-E1: NFPA 820 HAZARDOUS (CLASSIFIED) LOCATIONS

ITEM	DESCRIPTION	CLASS	DIVISION	EXTENTS OF AREA
1	PUMP STATION WETWELL	1	1	INSIDE
2	PUMP STATION HATCH	1	2	AROUND HATCH - 1.5 FT HIGH, 3 FT HORIZONTAL FROM EDGES OF HATCH OPENING
3	PUMP STATION VENT	1	1, 2	DIV 1 - 3 FT RADIUS, DIV 2 - FROM 3 FT RADIUS TO 5 FT RADIUS OF OPENING
4	ODOR CONTROL SYSTEM	1	2	WITHIN 3 FT OF LEAKAGE SOURCES SUCH AS FANS, DAMPERS, FLEXIBLE CONNECTIONS, FLANGES, PRESSURIZED UNWELDED DUCTWORK, AND ODOR-CONTROL VESSELS
5	BASINS	1	2	ENCLOSED TANK, ENVELOPE 18 INCHES SURROUNDING TANKS
6	METER AND VALVE VAULTS	1	2	INSIDE (REQUIRES TRAP AND TRAP-GUARD ON DRAIN TO INFLUENT PS)
7	HEADWORKS	1	1	INSIDE SCREEN HOUSING
8	BASIN INTERIOR	1	1	INSIDE
9	JUNCTION MANHOLE	1	1	INSIDE
10	NOT USED	--	--	NOT USED
11	INFLUENT MANHOLE	1	1	INSIDE
12	PLANT DRAIN PUMP STATION	1	1	INSIDE
13	NON POTABLE WATER STORAGE STRUCTURE	UNCLASSIFIED	--	--

Call 811 two business days before you dig

SHEET 191 OF 226

BID SET

CAD NO.

NO.	REVISIONS	INT.	APP.	DATE

ACTION	BY	DATE
DESIGNED	MC	04/11/25
DRAWN	JV	04/11/25
CHECKED (FIELD)		
CHECKED (HDQTS.)		

MARVIN C. CASANOVA, STATE OF WASHINGTON, 48989, REGISTERED PROFESSIONAL ENGINEER

4/11/2025

REGISTERED STAMP

WASHINGTON STATE PARKS AND RECREATION COMMISSION

NISQUALLY STATE PARK

PHASE 3A MAINTENANCE BUILDING AND WWTF

ELECTRICAL SITE PLAN

B-E3.0

SCALE

AS NOTED

PARKS FILE#

U:\PSO\Projects\Clients\4763-RW Droll\216-4763-010 Nisqually\ParkWWOptions\99Svcs\CADD\DWG\PS18062A-E3.0.dwg
Apr-11-25 8:49am

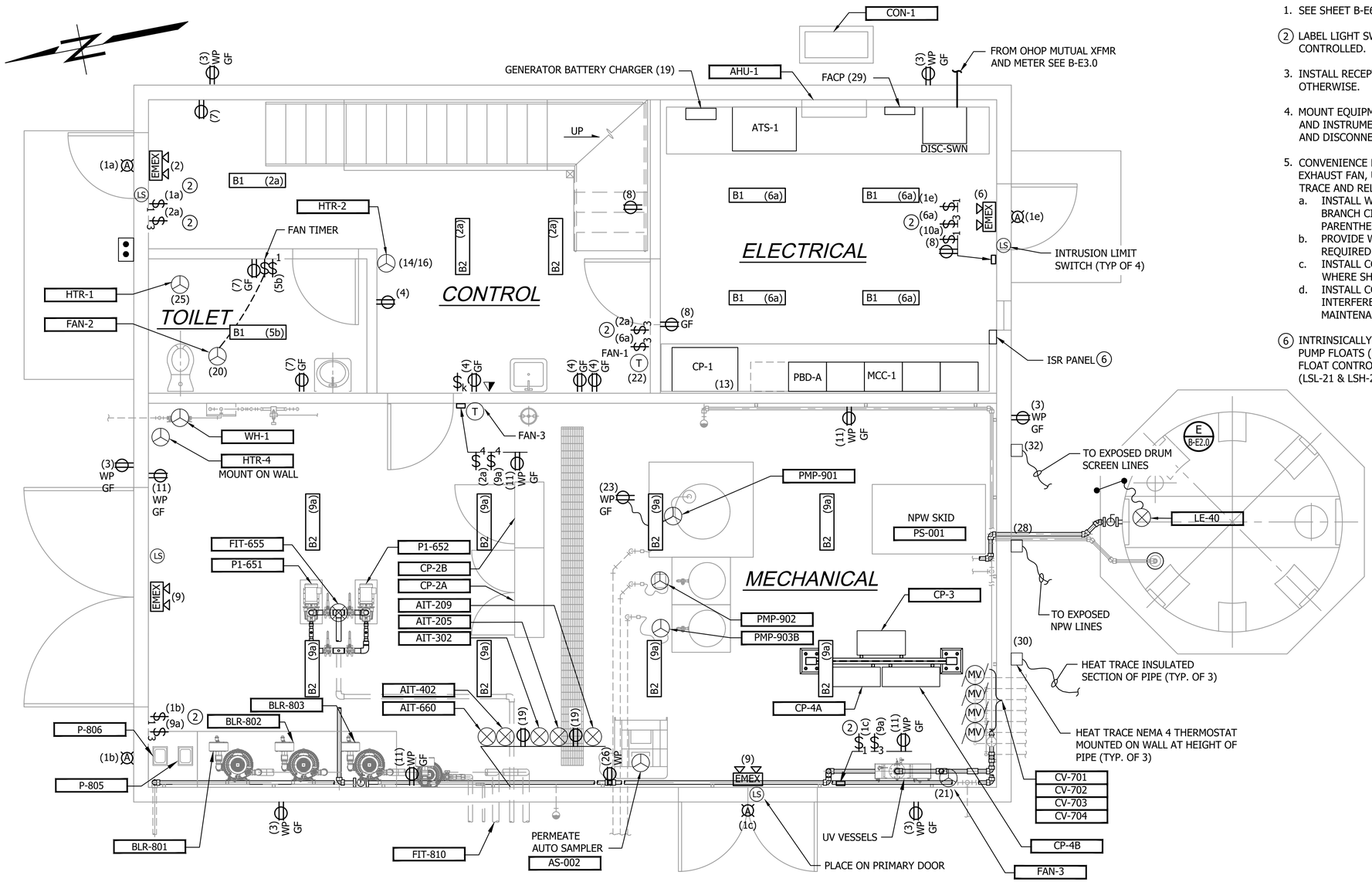

ELECTRICAL PLAN

SCALE: 3/8"=1'-0"

NOTES:

1. SEE SHEET B-E6.1 FOR LIGHTING SCHEDULE.
2. LABEL LIGHT SWITCH TO IDENTIFY WHICH LIGHTS ARE CONTROLLED.
3. INSTALL RECEPTACLES 24" A.F.F. UNLESS NOTED OTHERWISE.
4. MOUNT EQUIPMENT USING STAINLESS STEEL STRUT: PANELS AND INSTRUMENTS @ 66" A.F.G. TO TOP, TERMINAL BOXES AND DISCONNECT SWITCHES @ 48" A.F.G. TO TOP.
5. CONVENIENCE RECEPTACLES, LIGHTING FIXTURES, WALL EXHAUST FAN, UNIT HEATERS. MOTORIZED DAMPER, HEAT TRACE AND RELATED SWITCHES:
   a. INSTALL WHERE SHOWN AND CONNECT TO 120V BRANCH CIRCUITS AND/OR SWITCHLEGS INDICATED IN PARENTHESES.
   b. PROVIDE WIRES, CONDUITS, ETC (NOT SHOWN) AS REQUIRED FOR PROPER OPERATION OF EQUIPMENT.
   c. INSTALL CONDUITS CONCEALED IN WALLS EXCEPT WHERE SHOWN OTHERWISE.
   d. INSTALL CONDUITS AND BOXES SO AS NOT TO INTERFERE WITH INSTALLATION. OPERATION AND MAINTENANCE OF OTHER EQUIPMENT.
6. INTRINSICALLY SAFE BARRIERS (RELAYS) FOR PLANT DRAIN PUMP FLOATS (LSL-31 & LSH-32), INFLUENT PUMP BACKUP FLOAT CONTROL (LSL-11 & LSH-14) & MBR FEED FLOATS (LSL-21 & LSH-24).

Call 811 two business days before you dig

SHEET 192 OF 226

BID SET

CAD NO.

NO.	REVISIONS	INT.	APP.	DATE

ACTION	BY	DATE
DESIGNED	MC	04/11/25
DRAWN	JV	04/11/25
CHECKED (FIELD)		
CHECKED (HDQTS.)		

MARVIN C. CASANOVA STATE OF WASHINGTON 48989 REGISTERED PROFESSIONAL ENGINEER 4/11/2025

REGISTERED STAMP

WASHINGTON STATE PARKS AND RECREATION COMMISSION

NISQUALLY STATE PARK

PHASE 3A MAINTENANCE BUILDING AND WWTF

BUILDING ELECTRICAL PLAN

B-E4.0

SCALE

AS NOTED

PARKS FILE#

U:\PSO\Projects\Clients\4763-RW Droll\216-4763-010 Nisqually-PortWWOptions\999svcs\CADD\DWG\PS18062A-E4.0.dwg
Apr-11-25 8:23am

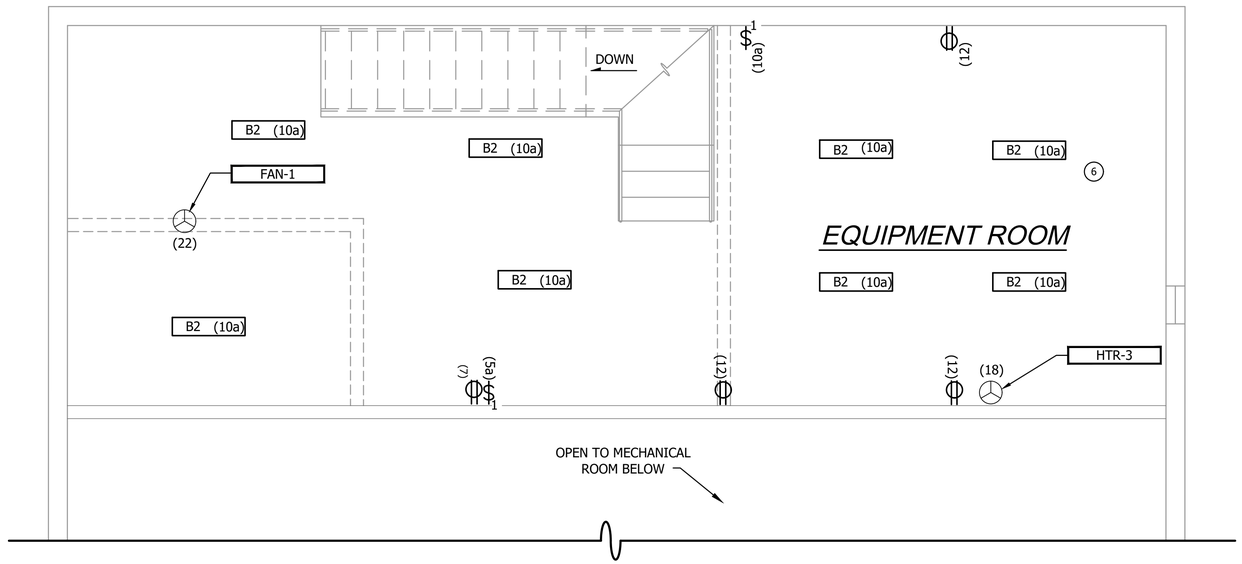

MECHANICAL / STORAGE PLAN

SCALE: 3/8"=1'-0"

NOTES:

1. SEE SHEET B-E6.1 FOR LIGHTING SCHEDULE.
2. INSTALL RECEPTACLES 24" A.F.F. UNLESS NOTED OTHERWISE.
3. CONVENIENCE RECEPTACLES, LIGHTING FIXTURES, WALL EXHAUST FAN, UNIT HEATERS. MOTORIZED DAMPER, HEAT TRACE AND RELATED SWITCHES:
   a. INSTALL WHERE SHOWN AND CONNECT TO 120V BRANCH CIRCUITS AND/OR SWITCHLEGS INDICATED IN PARENTHESES.
   b. PROVIDE WIRES, CONDUITS, ETC (NOT SHOWN) AS REQUIRED FOR PROPER OPERATION OF EQUIPMENT.
   c. INSTALL CONDUITS CONCEALED IN WALLS EXCEPT WHERE SHOWN OTHERWISE.
   d. INSTALL CONDUITS AND BOXES SO AS NOT TO INTERFERE WITH INSTALLATION. OPERATION AND MAINTENANCE OF OTHER EQUIPMENT.

BID SET

Call 811 two business days before you dig

SHEET 193 OF 226

CAD NO.

NO.	REVISIONS	INT.	APP.	DATE

ACTION	BY	DATE
DESIGNED	MC	04/11/25
DRAWN	JV	04/11/25
CHECKED (FIELD)		
CHECKED (HDQTS.)		

MARVIN C. CASANOVA
STATE OF WASHINGTON
48989
REGISTERED PROFESSIONAL ENGINEER
4/11/2025

REGISTERED STAMP

WASHINGTON STATE PARKS AND RECREATION COMMISSION

NISQUALLY STATE PARK

PHASE 3A MAINTENANCE BUILDING AND WWTF

MECH / STORAGE ELECTRICAL PLAN

B-E4.1

SCALE

AS NOTED

PARKS FILE#

U:\PSO\Projects\Clients\4763-RW Draft\216-4763-010 Nisqually Park WWOptions\99Svcs\CADD\DWG\PS180620-E4.1.dwg
Apr-11-25 8:50am

NOTES:

1. ENTER ENCLOSURES THROUGH BOTTOM.
2. PROVIDE STRAIN RELIEF FOR ALL CABLES WITHIN BASINS USING STAINLESS STEEL KLELLUMS CORD GRIPS. MOUNT WHERE ACCESSIBLE TO OPERATOR PER (A / B-E2.0).
3. COIL AND CABLE TIE EXCESS INSTRUMENT CABLES WITHIN BASINS.
4. INSTRUMENT LOCATIONS SHOWN ARE APPROXIMATE. VERIFY EXACT LOCATIONS BEFORE ROUTING CABLE AND CONDUIT.
5. (5) PROVIDE NEMA 7 (XP) JUNCTION BOX WITH STAINLESS STEEL HINGES, CONTAINING SCREW COMPRESSION TERMINALS FOR CONNECTION OF PUMP/INSTRUMENT CABLE LEADS TO WIRES RUNNING TO MCC-1 & CP-1. SEE DETAIL THIS SHEET FOR MOUNTING.
6. REFER TO SHEET B-E6.2 FOR CABLE AND CONDUIT SCHEDULE.

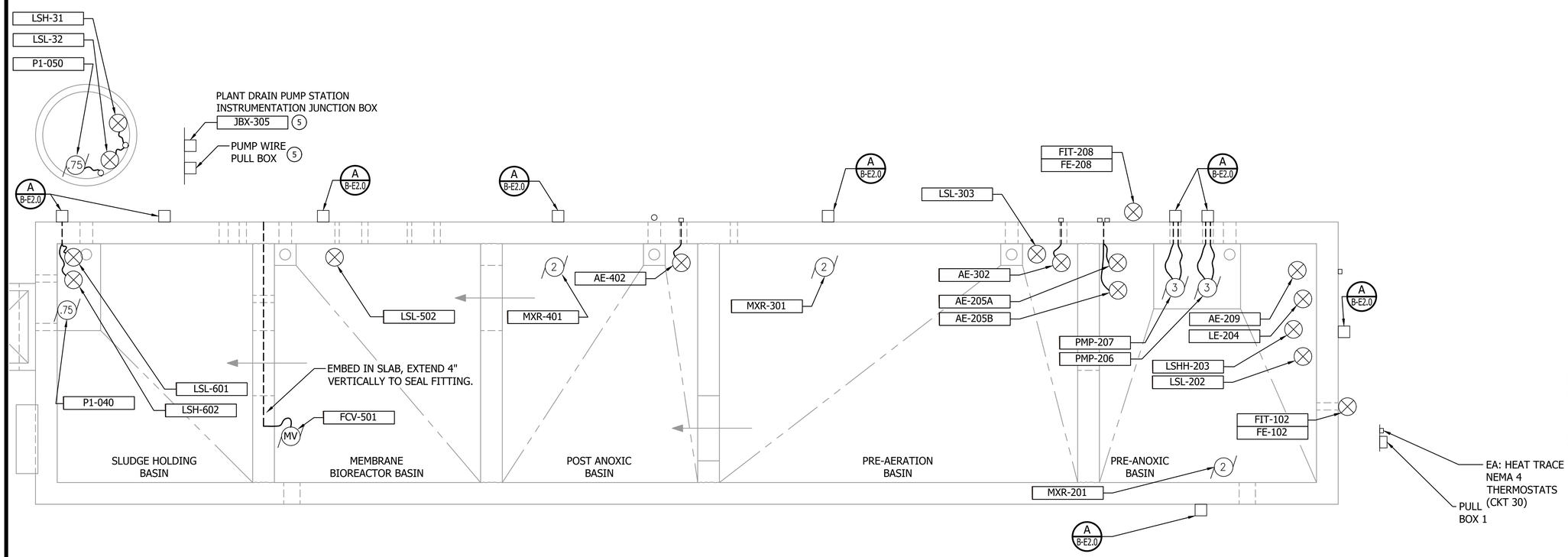

MBR TANK ELECTRICAL PLAN

SCALE: 3/8"=1'-0"

Call 811 two business days before you dig

SHEET 194 OF 226

BID SET

CAD NO.	
DATE	
APP.	
INT.	
REVISIONS	
NO.	

ACTION	BY	DATE
DESIGNED	MC	04/11/25
DRAWN	JV	04/11/25
CHECKED (FIELD)		
CHECKED (HDQTS.)		

MARVIN C. CASANOVA
STATE OF WASHINGTON
48989
REGISTERED PROFESSIONAL ENGINEER
4/11/2025

REGISTERED STAMP

WASHINGTON STATE PARKS AND RECREATION COMMISSION

NISQUALLY STATE PARK

PHASE 3A MAINTENANCE BUILDING AND WWTF

MBR TANK ELECTRICAL PLAN

B-E5.0

SCALE

AS NOTED

PARKS FILE#

U:\PSO\Projects\Clients\4763-RW Droll\216-4763-010 Nisqually Park WWOptions\99Svcs\CADD\DWG\PS18062A-E5.0.dwg
Apr-11-25 8:20am

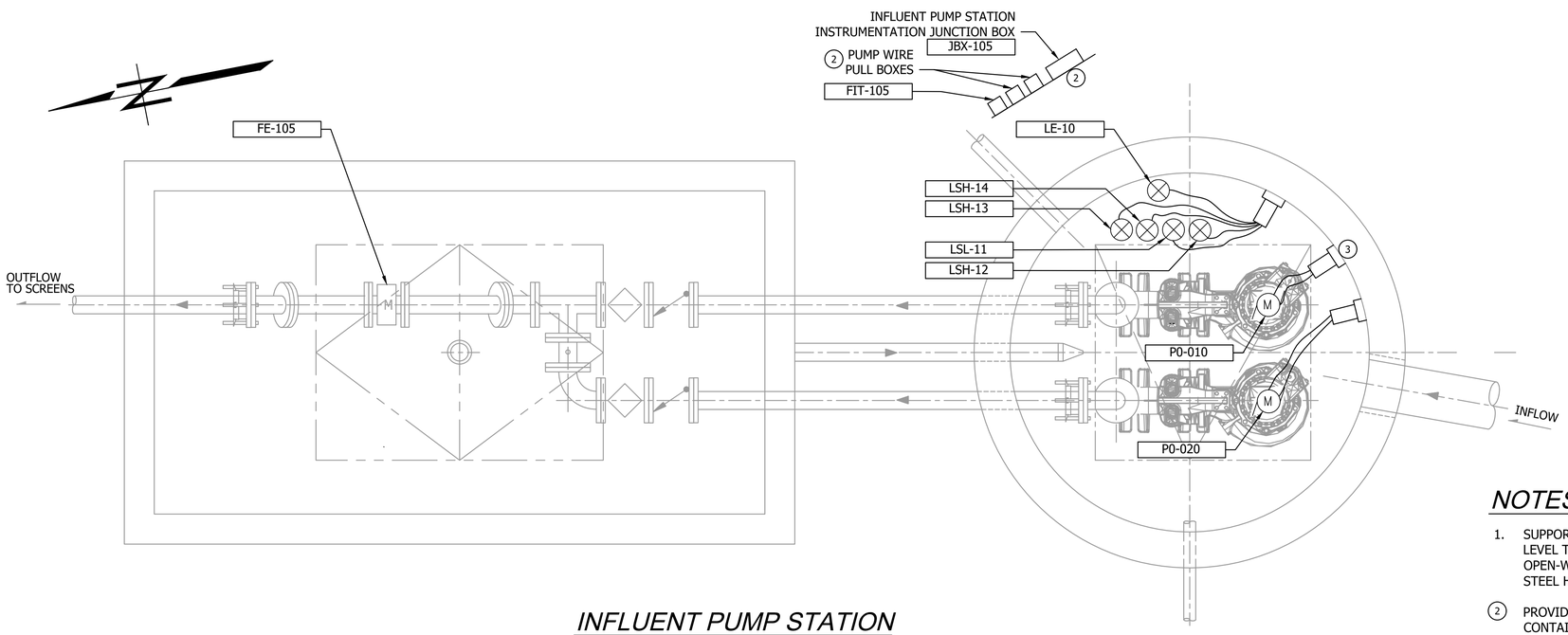

INFLUENT PUMP STATION ELECTRICAL PLAN

SCALE: 1"=1'-0"

NOTES:

1. SUPPORT ALL PUMP CABLES, FLOAT SWITCH CABLES, AND SUBMERSIBLE LEVEL TRANSDUCER CABLES IN WET WELL W STAINLESS STEEL OPEN-WEAVE GRIPS (KELLUMS, OR EQUAL) ATTACHED TO STAINLESS STEEL HOOKS FASTENED TO ACCESS HATCH FRAME.

2. PROVIDE NEMA 7 (XP) JUNCTION BOX WITH STAINLESS STEEL HINGES, CONTAINING SCREW COMPRESSION TERMINALS FOR CONNECTION OF PUMP/INSTRUMENT CABLE LEADS TO WIRES RUNNING TO MCC-1 & CP-1. SEE DETAIL THIS SHEET FOR MOUNTING.

3. PROVIDE INSULATING BUSHING ON WET WELL END OF EACH CONDUIT.

4. REFER TO SHEET B-E6.2 FOR CABLE AND CONDUIT SCHEDULE.

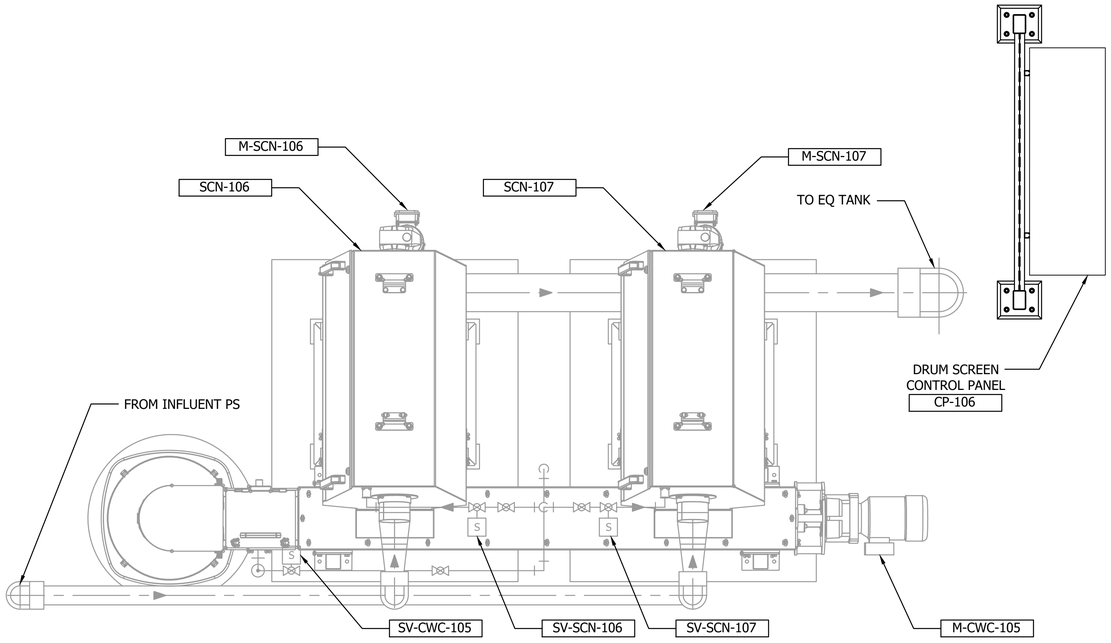

INFLUENT SCREEN PLAN

SCALE: 1"=1'-0"

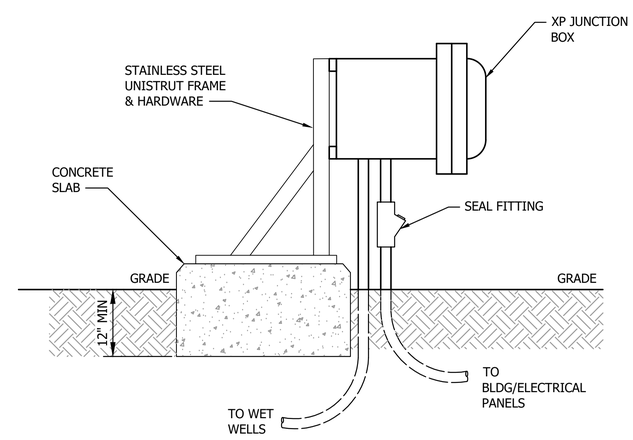

MOUNTING DETAIL

A -

NO SCALE

Call 811 two business days before you dig

SHEET 195 OF 226

BID SET

CAD NO.		
		DATE
		APP.
		INT.
		REVISIONS
		NO.

ACTION	BY	DATE
DESIGNED	MC	04/11/25
DRAWN	JV	04/11/25
CHECKED (FIELD)		
CHECKED (HDQTS.)		

MARVIN C. CASANOVA
STATE OF WASHINGTON
48989
REGISTERED PROFESSIONAL ENGINEER
4/11/2025

REGISTERED STAMP

WASHINGTON STATE PARKS AND RECREATION COMMISSION

NISQUALLY STATE PARK

PHASE 3A MAINTENANCE BUILDING AND WWTF

INFLUENT PUMP AND SCREEN ELECTRICAL PLAN

B-E5.1

SCALE

AS NOTED

PARKS FILE#

U:\PSO\Projects\Clients\4763-RW Droll\216-4763-010 Nisqually\ParkWWOptions\999vcs\CADD\DWG\PS18062A-E5.1.dwg
Apr-11-25 8:19am

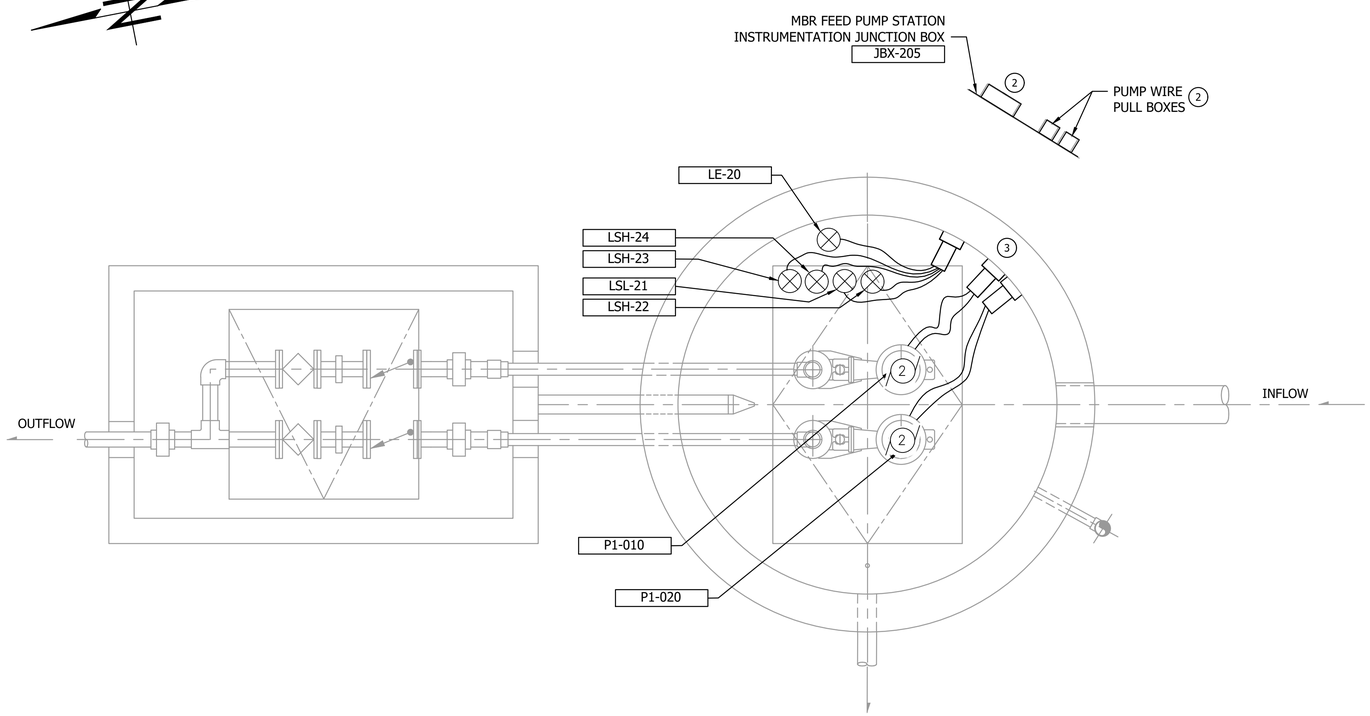

MBR FEED PUMP STATION ELECTRICAL PLAN

SCALE: 1"=1'-0"

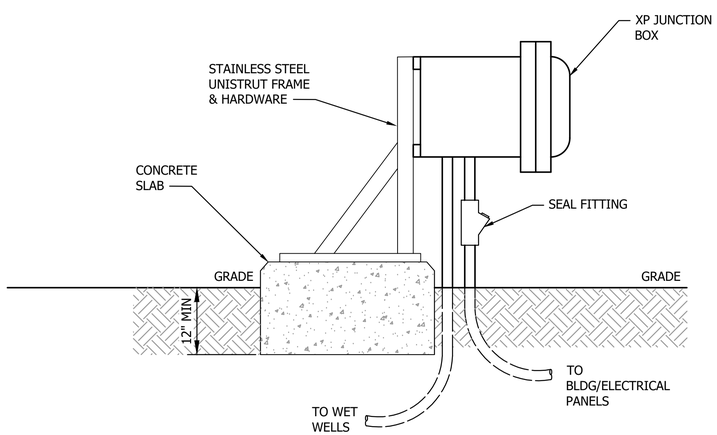

MOUNTING DETAIL

A
-
NO SCALE

NOTES:

1. SUPPORT ALL PUMP CABLES, FLOAT SWITCH CABLES, AND SUBMERSIBLE LEVEL TRANSDUCER CABLES IN WET WELL W STAINLESS STEEL OPEN-WEAVE GRIPS (KELLUMS, OR EQUAL) ATTACHED TO STAINLESS STEEL HOOKS FASTENED TO ACCESS HATCH FRAME.
2. PROVIDE NEMA 7 (XP) JUNCTION BOX WITH STAINLESS STEEL HINGES, CONTAINING SCREW COMPRESSION TERMINALS FOR CONNECTION OF PUMP/INSTRUMENT CABLE LEADS TO WIRES RUNNING TO MCC-1 & CP-1. SEE DETAIL THIS SHEET FOR MOUNTING.
3. PROVIDE INSULATING BUSHING ON WET WELL END OF EACH CONDUIT.
4. REFER TO SHEET B-E6.2 FOR CABLE AND CONDUIT SCHEDULE.

BID SET

Call 811 two business days before you dig

SHEET 196 OF 226

CAD NO.

NO.	REVISIONS	INT.	APP.	DATE

ACTION	BY	DATE
DESIGNED	MC	04/11/25
DRAWN	JV	04/11/25
CHECKED (FIELD)		
CHECKED (HDQTS.)		

MARVIN C. CASANOVA
STATE OF WASHINGTON
48989
REGISTERED PROFESSIONAL ENGINEER
4/11/2025

REGISTERED STAMP

WASHINGTON STATE PARKS AND RECREATION COMMISSION

NISQUALLY STATE PARK

PHASE 3A MAINTENANCE BUILDING AND WWTF

MBR FEED PUMP STATION ELECTRICAL PLAN

B-E5.2

SCALE

AS NOTED

PARKS FILE#

U:\PSO\Projects\Clients\4763-RW Droll\216-4763-010 NisquallyParkWWOptions\99Svcs\CADD\DWG\PS18062A-E5.2.dwg
Apr-11-25 8:21am

NOTES:

1. RUN COMMAND TO STANDBY POWER SOURCE.
2. SEE MBR MANUFACTURER DRAWINGS FOR MOTORS FED FROM THIS CONTROL PANEL.

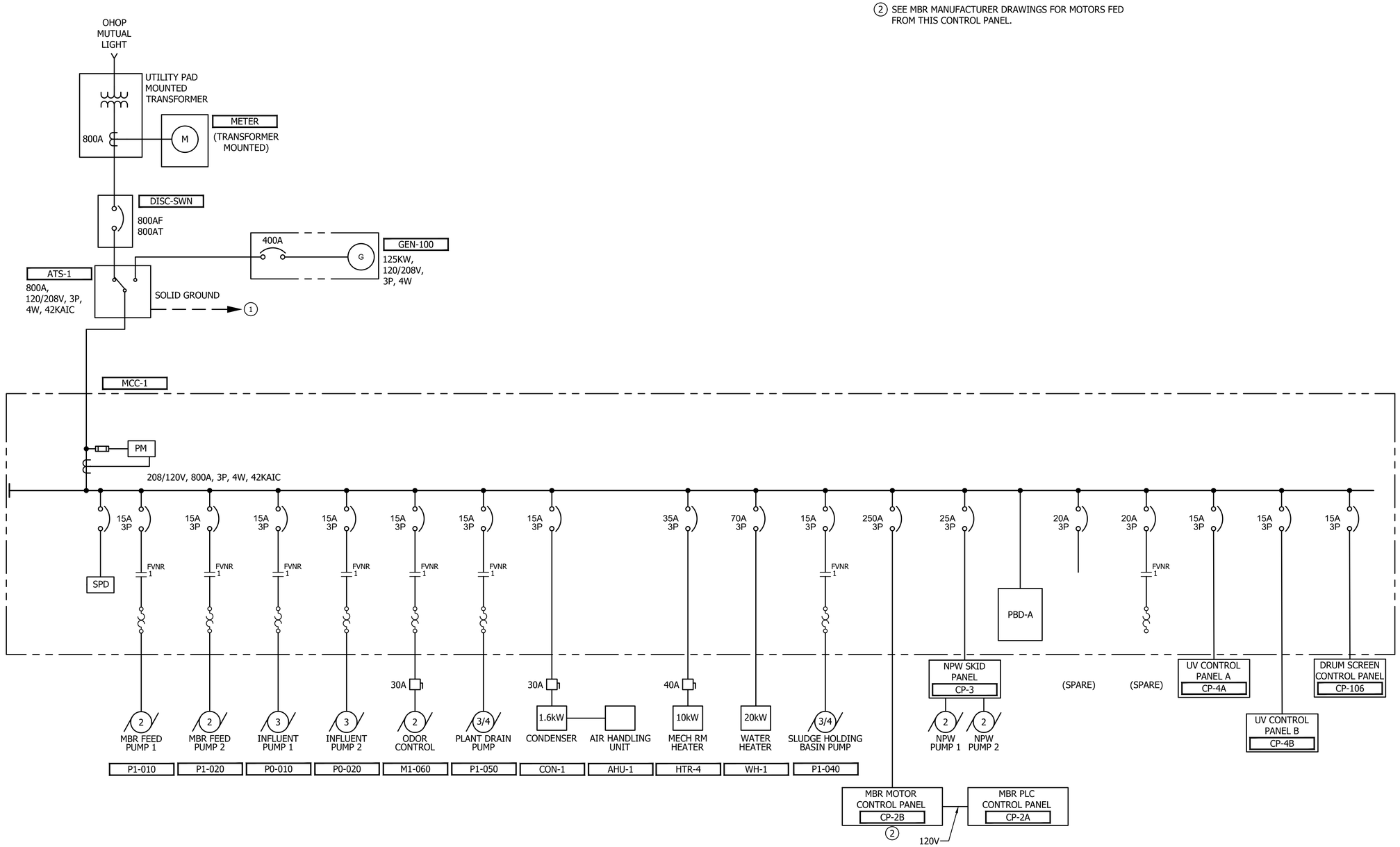

MCC-1 ONE-LINE DIAGRAM

Call 811 two business days before you dig

SHEET 197 OF 226

BID SET

CAD NO.

NO.	REVISIONS	INT.	APP.	DATE

ACTION	BY	DATE
DESIGNED	MC	04/11/25
DRAWN	JV	04/11/25
CHECKED (FIELD)		
CHECKED (HDQTS.)		

MARVIN C. CASANOVA STATE OF WASHINGTON 48989 REGISTERED PROFESSIONAL ENGINEER

4/11/2025

REGISTERED STAMP

WASHINGTON STATE PARKS AND RECREATION COMMISSION

NISQUALLY STATE PARK

PHASE 3A MAINTENANCE BUILDING AND WWTF

ELECTRICAL ONE-LINE DIAGRAM

B-E6.0

SCALE

NO SCALE

PARKS FILE#

U:\PSO\Projects\Clients\4763-RW Droll\216-4763-010 Nisqually ParkWWOptions\99Svcs\CADD\DWG\PS18062A-E6.0.dwg
Apr-11-25 8:59am

NAME: **MCC-1** v 3

VOLTAGE: 208
PHASE: 3
WIRE: 4
HERTZ: 60

NEUTRAL BUS: YES
GROUND BUS: YES
MAIN BREAKER SIZE: 800 AMPS
MINIMUM BUS SIZE: 800 AMPS
FAULT CURRENT BRACING: 35,000 AMPS, RMS SYMMETRICAL

LOCATION: ELECTRICAL ROOM
FED FROM: ATS-1
FEED (OCPD SIZE):
ENCLOSURE TYPE: NEMA 1

ASSET NUMBER	EQUIPMENT NAME OR LOAD DESCRIPTION	CONNECTED LOAD LOAD SIZE	LOAD UNIT	VOLT	PH	HP	AMPS	KVA	LOAD TYPE	LTG	RCPT	MOTOR	HVAC	MISC	LARGEST MOTOR
						0.0	0.0	0.0		0.0	0.0	0.0	0.0	0.0	0.0
P1-010	MBR FEED PUMP 1	2	HP	208	3	2.0	7.5	2.7	M	0.0	0.0	2.7	0.0	0.0	0.0
P1-020	MBR FEED PUMP 2	2	HP	208	3	2.0	7.5	2.7	M	0.0	0.0	2.7	0.0	0.0	0.0
M1-060	ODOR CONTROL	2	HP	208	3	2.0	7.5	2.7	M	0.0	0.0	2.7	0.0	0.0	0.0
P1-050	PLANT DRAIN PUMP	0.75	HP	208	3	0.8	3.5	1.3	M	0.0	0.0	1.3	0.0	0.0	0.0
WH-1	WATER HEATER	20	KW	208	3	0.0	55.5	20.0	H	0.0	0.0	0.0	20.0	0.0	0.0
P1-040	SLUDGE HOLDING PUMP	0.75	HP	208	3	0.8	3.5	1.3	M	0.0	0.0	1.3	0.0	0.0	0.0
CP-2B	KUBOTA MOTOR CONTROL PANEL	64.3	KVA	208	3	0.0	178.5	64.3	LM	0.0	0.0	0.0	0.0	0.0	64.3
CP-3	NPW PUMP SKID (QTY 2 - 2HP)	5	HP	208	3	5.0	16.7	6.0	M	0.0	0.0	6.0	0.0	0.0	0.0
PBD-A	PANELBOARD PBD-A	19.83	KVA	208	3	0.0	55.0	19.8	X	0.0	0.0	0.0	0.0	19.8	0.0
CP-4A	UV CONTROL PANEL A	3.6	KVA	208	3	0.0	10.0	3.6	X	0.0	0.0	0.0	0.0	3.6	0.0
CP-4B	UV CONTROL PANEL B	3.6	KVA	208	3	0.0	10.0	3.6	X	0.0	0.0	0.0	0.0	3.6	0.0
CP-106	DRUM SCREEN CONTROL PANEL	0.5	KVA	208	3	0.0	1.4	0.5	X	0.0	0.0	0.0	0.0	0.5	0.0
P0-010	INFLUENT PUMP 1	3	HP	208	3	3.0	10.6	3.8	M	0.0	0.0	3.8	0.0	0.0	0.0
P0-020	INFLUENT PUMP 2	3	HP	208	3	3.0	10.6	3.8	M	0.0	0.0	3.8	0.0	0.0	0.0
CON-1, AHU-1	CONDENSER AND AIR HANDLING UNIT	1.6	KW	208	3	0.0	4.4	1.6	H	0.0	0.0	0.0	1.6	0.0	0.0
HTR-4	HEATER, MECH ROOM	10	KW	208	3	0.0	27.8	10.0	H	0.0	0.0	0.0	10.0	0.0	0.0
	Connected Totals:									0.00	0.00	24.28	31.60	27.53	64.30

MCC-1 LOAD CALCULATION:

		CONNECTED KVA	METHOD	NEC DEMAND	CALC. KVA
TOTAL LIGHTING (L) LOAD:	L	0.00	ALL @	125%	0.00
TOTAL RECEPTACLE (R) LOAD:	R	0.00	FIRST 10KVA @	125%	0.00
			REMAINDER OVER 10KVA	50%	0.00
TOTAL MOTOR (M) LOAD:	M	24.28	ALL @	100%	24.28
	LM	64.30	125% OF LARGEST	125%	80.38
TOTAL HVAC (H) LOAD:	H	31.60	ALL @	125%	39.50
TOTAL MISCELLANEOUS (X) LOAD:	X	27.53	ALL @	125%	34.41
TOTAL KVA:		147.71 KVA			178.57 KVA
AVERAGE AMPS @	208 volts	410.01 AMPS			495.66 AMPS

PANELBOARD SCHEDULE

v 5.0

NAME: PBD-A

VOLTAGE RATING: **208/120 VOLTS, 3 PHASE, 4 WIRE**
BUS RATING: **225** AMPS
MAIN BREAKER: **225** AMPS
FEED:
MOUNTING: **SURFACE**
SPECIAL FEATURES: **22KAIC**

LOCATION: **ELECTRICAL ROOM**
FED FROM: **MCC-1**
NOTES: **NEMA 1**

LOAD TYPE	CIRCUIT DESCRIPTION	VA	CKT	BRKR	L1 L2 L3	BRKR	CKT	VA	CIRCUIT DESCRIPTION	LOAD TYPE
L	LTG, OUTSIDE	360	1	20 / 1	-A-	20 / 1	2	98	LTG, CONTROL ROOM	L
R	RECEPT, OUTSIDE	1,080	3	20 / 1	-B-	20 / 1	4	1,080	RECEPT, CONTROL ROOM	R
L	LTG, TOILET	49	5	20 / 1	-C-	20 / 1	6	196	LTG, ELECT ROOM	L
R	RECEPT, OUTSIDE	560	7	20 / 1	-A-	20 / 1	8	360	RECEPT, ELECT ROOM	R
L	LTG, MECH RM	392	9	20 / 1	-B-	20 / 1	10	392	LTG, STORAGE ROOM	L
R	RECEPT, MECH RM	1,080	11	20 / 1	-C-	20 / 1	12	720	RECEPT, STORAGE ROOM	R
X	CONTROL PANEL (CP-1)	1000	13	20 / 1	-A-	20 / 1	14	1,000	HEATER, CONTROL ROOM (HTR-2)	H
L	LTG, SITE POLE MOUNTED	320	15	20 / 1	-B-	20 / 1	16		SPARE	
R	RECEPT, POLE MOUNTED	1,500	17	20 / 1	-C-	20 / 1	18	1,000	HEATER, EQUIPMENT ROOM (HTR-3)	H
X	GENERATOR BATTERY CHARGER	1,500	19	20 / 1	-A-	20 / 1	20	200	EX-FAN, RESTROOM (FAN-2)	H
H	EX-FAN, MECH RM (FAN-3)	1,000	21	20 / 1	-B-	20 / 1	22	1,000	EX-FAN, CONTROL ROOM (FAN-1)	H
R	CLEANING PUMP (PMP-0901) RECEPT.	200	23	20 / 1	-C-	20 / 1	24	200	INFLUENT AUTO SAMPLER (SMP-2230)	M
H	HTR, RESTROOM (HTR-1)	750	25	20 / 1	-A-	20 / 1	26	200	PERMEATE AUTO SAMPLER (AS-002)	M
X	HEAT TRACE - DRUM SCREENS	500	27	20 / 1	-B-	20 / 1	28	500	HEAT TRACE - NPW	X
X	FIRE ALARM CONTROL PANEL (FACP-1)	500	29	20 / 1	-C-	20 / 1	30	500	HEAT TRACE - MBR PIPING	X
X	KUBOTA PLC CONTROL PANEL (CP-2A)	250	31	20 / 1	-A-	20 / 1	32	500	HEAT TRACE - DRUM SCREENS	X
	SPARE		33	20 / 1	-B-	20 / 1	34		SPARE	
	SPARE		35	20 / 1	-C-	20 / 1	36	840	GENERATOR BLOCK HEATER	X
	SPARE		37	20 / 1	-A-	20 / 1	38		SPARE	
	SPARE		39	20 / 1	-B-	20 / 1	40		SPARE	
	SPARE		41	20 / 1	-C-	20 / 1	42		SPARE	
	LINE LOADS:	**6,778 VA(L1)**			**6,264 VA(L2)**			**6,785 VA(L3)**		
	TOTAL LOAD:	**19.83 KVA**			**55.0 AMPS**					

PBD-A LOAD CALCULATION:

		CONNECTED VA	METHOD	NEC DEMAND	CALC. VA
TOTAL LIGHTING (L) LOAD:	L	1807	ALL @	125%	2259
TOTAL RECEPTACLE (R) LOAD:	R	6580	FIRST 10KVA @	125%	8225
			REMAINDER OVER 10KVA	50%	0
TOTAL MOTOR (M) LOAD:	M	400	ALL @	100%	400
	LM	0	125% OF LARGEST	125%	0
TOTAL HVAC (H) LOAD:	H	4950	ALL @	125%	6188
TOTAL MISCELLANEOUS (X) LOAD:	X	6090	ALL @	125%	7613
TOTAL VA:		19827 VA			24684 VA
AVERAGE AMPS @		55 AMPS			69 AMPS
VOLTAGE PHASE TO PHASE=	208				

LIGHTING FIXTURE SCHEDULE:

A	LSI INDUSTRIES "LED CHALLENGER WALL SCONCE", FORWARD THROW MEDIUM DISTRIBUTION, DOWNLIGHT, 48 HIGH BRIGHTNESS LED'S, FLAT CLEAR TEMPERED GLASS, MOUNTED ON WALL, 120V, BLACK FINISH, BUTTON TYPE PHOTOCELL, POLYCARBONATE SHIELD.
B1	LITHONIA "VAP LED" SERIES, CORROSION RESISTANT FIBERGLASS REINFORCED POLYESTER HOUSING, IMPACT RESISTANT POLYCARBONATE LENS, STAINLESS STEEL HUBS, 49 WATTS, 6000 LUMENS, 120V, STAINLESS STEEL FIXED SURFACE MOUNTING BRACKETS, CEILING MOUNTED.
B2	LITHONIA "VAP LED" SERIES, CORROSION RESISTANT FIBERGLASS REINFORCED POLYESTER HOUSING, IMPACT RESISTANT POLYCARBONATE LENS, STAINLESS STEEL HUBS, 49 WATTS, 6000 LUMENS, 120V, STAINLESS STEEL FIXED SURFACE MOUNTING BRACKETS, CHAIN MOUNTED RING BOLTS WITH BLACK POWDERCOATED AIRCRAFT CABLES, MOUNTING HEIGHT 10' AFF FROM BOTTOM OF FIXTURE.
B3	LITHONIA "VAP LED" SERIES, CORROSION RESISTANT FIBERGLASS REINFORCED POLYESTER HOUSING, IMPACT RESISTANT POLYCARBONATE LENS, STAINLESS STEEL HUBS, 49 WATTS, 6000 LUMENS, 120V, STAINLESS STEEL FIXED SURFACE MOUNTING BRACKETS, STAINLESS STEEL FIXED 45 DEGREE MOUNTING BRACKETS, WALL MOUNTED 10' AFF.
C	DECO LIGHTING "STRADA COBRAHEAD", IP65 RATED, 80W LED LAMP W/50,000 HOUR LIFE, INSTANT ON, 4100K COLOR TEMPERATURE, 120V, BLACK FINISH, FLAT LENS, VANDAL SHIELD, MOUNTED ON HAPCO TAPERED ALUMINUM POLE (W/SATIN FINISH, TRANSFORMER BASE, 6' ARM) AT 20' A.F.G.
EMEX	MAXILUME CAT. NO. ELX-719-G, WET LOCATION LED EXIT/EMERGENCY COMBINATION W/ BATTERY BACK-UP, CORROSION-PROOF AND SCRATCH/IMPACT RESISTANT THERMOPLASTIC HOUSING, (2) 5W MR16 ADJUSTABLE EMERGENCY LAMPS, GREEN LED SIGN ILLUMINATION, LEAD-CALCIUM BATTERY WITH MINIMUM 90 MINUTES OF ILLUMINATION, SOLID STATE BATTERY CHARGER, INDICATOR & TEST SWITCH, MOUNTED ON WALL, 120V.

BID SET

Call 811 two business days before you dig

SHEET 198 OF 226

CAD NO.

	DATE	APP.	INT.	REVISIONS	NO.

ACTION	BY	DATE
DESIGNED	MC	04/11/25
DRAWN	JV	04/11/25
CHECKED (FIELD)		
CHECKED (HDQTS.)		

MARVIN C. CASANOVA
STATE OF WASHINGTON
48989
REGISTERED PROFESSIONAL ENGINEER
4/11/2025

REGISTERED STAMP

WASHINGTON STATE PARKS AND RECREATION COMMISSION

NISQUALLY STATE PARK

PHASE 3A MAINTENANCE BUILDING AND WWTF ELECTRICAL PANELBOARD AND LIGHTING SCHEDULES

B-E6.1

SCALE
NO SCALE

PARKS FILE#

U:\PSO\Projects\Clients\4763-RW Dral\216-4763-010 Nisqually/ParkWWOptions\99Svcs\CADD\DWG\PS18062A-E6.1.dwg
Apr-11-25 8:58am

CONDUIT AND CABLE SCHEDULE

v2.0

NUMBER	CONDUIT QUAN & SIZE	CONDUIT TYPE	WIRE FILL	WIRE TYPE	FROM	TO	VIA	REMARKS
C-101	(1)1"	PVC/GRS	(10)#14	THWN	CP-1	GEN-100		(2) SPARE
C-102	(1)1"	GRS	(10)#14	THWN	CP-1	ATS-1		
C-103	(1)4"	GRS	(82)#14	THWN	CP-1	MCC-1		(8) SPARE
C-104	(1)1"	PVC/GRS	(2)#10	THWN	ATS-1	GEN-100		START SIGNAL
C-105	(1)1"	PVC/GRS	(8)#14, (1)#14G	THWN	MCC-1	JBX-105	ISR PANEL	FLOAT SIGNALS
C-105A	(1)1"	PVC/GRS	MANUFACTURER'S CABLE	MANUF. CABLE	JBX-105	LSL-11, LSH-12, LSH-13, LSH-14		
C-106	(1)1"	PVC/GRS	(8)#14, (1)#14G	THWN	MCC-1	JBX-205	ISR PANEL	FLOAT SIGNALS
C-106A	(1)1"	PVC/GRS	MANUFACTURER'S CABLE	MANUF. CABLE	JBX-205	LSL-21, LSH-22, LSH-23, LSH-24		
C-107	(1)1"	PVC/GRS	(4)#14, (1)#14G	THWN	MCC-1	JBX-305	ISR PANEL	FLOAT SIGNALS
C-107A	(1)1"	PVC/GRS	MANUFACTURER'S CABLE	MANUF. CABLE	JBX-305	LSH-31, LSL-32		
C-200	(1)1"	PVC/GRS	(4)#14, (1)#14G	THWN	MCC-1	JBX-105		SEAL & TEMPERATURE
C-200A	(1)1"	PVC/GRS	MANUFACTURER'S CABLE	MANUF. CABLE	JBX-105	P0-010		
C-201	(1)1"	PVC/GRS	(4)#14, (1)#14G	THWN	MCC-1	JBX-105		SEAL & TEMPERATURE
C-201A	(1)1"	PVC/GRS	MANUFACTURER'S CABLE	MANUF. CABLE	JBX-105	P0-020		
C-202	(1)1"	PVC/GRS	(4)#14, (1)#14G	THWN	MCC-1	JBX-205		SEAL & TEMPERATURE
C-202A	(1)1"	PVC/GRS	MANUFACTURER'S CABLE	MANUF. CABLE	JBX-205	P1-010		
C-203	(1)1"	PVC/GRS	(4)#14, (1)#14G	THWN	MCC-1	JBX-205		SEAL & TEMPERATURE
C-203A	(1)1"	PVC/GRS	MANUFACTURER'S CABLE	MANUF. CABLE	JBX-205	P1-020		
C-204	(1)1"	PVC/GRS	(4)#14, (1)#14G	THWN	MCC-1	JBX-305		SEAL & TEMPERATURE
C-204A	(1)1"	PVC/GRS	MANUFACTURER'S CABLE	MANUF. CABLE	JBX-305	P1-050		
C-208	(1)1"	PVC/GRS	(4)#14	THWN	MCC-1	P1-040	JUNCTION BOX	SLUDGE PUMP CONTROL
C-210	(1)1"	GRS	(10)#14	THWN	CP-1	CP-3		NPW PUMP CONTROL
C-211	(1)1"	GRS	(12)#14, (1)#14G	THWN	CP-1	CV-701		(4) SPARE
C-212	(1)1"	GRS	(12)#14, (1)#14G	THWN	CP-1	CV-702		(4) SPARE
C-213	(1)1"	GRS	(12)#14, (1)#14G	THWN	CP-1	CV-703		(4) SPARE
C-214	(1)1"	GRS	(12)#14, (1)#14G	THWN	CP-1	CV-704		(4) SPARE
C-215	(1)3/4"	GRS	(2)#14, (1)#14G	THWN	CP-1	INTRUSION SW., CTRL N.		
C-216	(1)3/4"	GRS	(2)#14, (1)#14G	THWN	CP-1	INTRUSION SW., CTRL E.		
C-217	(1)3/4"	GRS	(2)#14, (1)#14G	THWN	CP-1	INTRUSION SW., ELEC.		
C-218	(1)3/4"	GRS	(2)#14, (1)#14G	THWN	CP-1	INTRUSION SW. MECH. W.		
C-219	(1)3/4"	GRS	(2)#14, (1)#14G	THWN	CP-1	INTRUSION SW. MECH. N.		
C-220	(1)3/4"	GRS	(3)#14	THWN	CP-1	BLDG. SECURITY SW.		
C-501	(1)1"	PVC/GRS	(4)#14, (1)#14G		CP-2A	LSL-601, LSH-602	JUNCTION BOX	FLOATS, SLUDGE HOLDING BASIN
C-502	(1)1"	PVC/GRS	(4)#14, (1)#14G		CP-2A	LSL-502	JUNCTION BOX	FLOAT, MBR BASIN
C-503	(1)1"	PVC/GRS	(8)#14, (1)#14G		CP-2A	FCV-501		VALVE, MBR BASIN
C-504	(1)1"	PVC/GRS	(4)#14, (1)#14G		CP-2A	LSHH-203, LSL-202	JUNCTION BOX	FLOATS, PRE-ANOXIC BASIN
C-505	(1)1"	PVC/GRS	(4)#14, (1)#14G		CP-2A	PMP-902, PMP-903B		FAIL SIGNALS
C-506	(1)1"	PVC/GRS	(2)#14, (1)#14G		CP-2A	LSL-303		FLOAT, PRE-AERATION BASIN
C-507	(1)1"	PVC/GRS	(8)#14, (1)#14G		CP-2A	FCV-657		VALVE, PERMEATE FLOW
C-512	(1)1"	PVC/GRS	(4)#14, (1)#14G		CP-2B	MXR-201	JUNCTION BOX	MIXER TEMP, MOISTURE
C-513	(1)1"	PVC/GRS	(4)#14, (1)#14G		CP-2B	MXR-401	JUNCTION BOX	MIXER TEMP, MOISTURE
C-514	(1)1"	PVC/GRS	MANUFACTURER'S CABLE	MANUF. CABLE	CP-2B	PMP-206		SEAL & TEMPERATURE
C-515	(1)1"	PVC/GRS	MANUFACTURER'S CABLE	MANUF. CABLE	CP-2B	PMP-207		SEAL & TEMPERATURE
C-516	(1)1"	PVC/GRS	(4)#14, (1)#14G		CP-2B	MXR-301	JUNCTION BOX	MIXER TEMP, MOISTURE
S-100	(1)1"	PVC/GRS	FIBER OPTIC CABLE, 6 STRAND	FO	CP-1	MAINTENANCE BUILDING	3'X3' HH01	
S-105	(1)1"	PVC/GRS	(2)#16	TSP	CP-1	FIT-105		INFLUENT FLOW TRANSMITTER
S-105A	(1)1"	GRS	MANUFACTURER'S CABLE	MANUF. CABLE	FE-105	FIT-105		
S-200	(1)1"	PVC/GRS	(2)#16	TSP	CP-1	JBX-105		INFLUENT WELL LEVEL TRANSMITTER
S-200A	(1)1"	PVC/GRS	MANUFACTURER'S CABLE	MANUF. CABLE	LE-10	JBX-105		
S-201	(1)1"	PVC/GRS	(2)#16	TSP	CP-1	JBX-205		MBR FEED WELL LEVEL TRANSMITTER
S-201A	(1)1"	PVC/GRS	MANUFACTURER'S CABLE	MANUF. CABLE	LE-20	JBX-205		
S-210	(1)1"	GRS	(2)CAT5e	CAT5e	CP-1	CP-2A		(1) SPARE
S-401	(1)1"	PVC/GRS	(2)#16	TSP	CP-1	AIT-100		H2S ANALYZER
S-402	(1)1"	PVC/GRS	(2)#16	TSP	CP-1	LE-40		NPW TANK LEVEL
S-403	(1)1"	GRS	(2)#16	TSP	CP-1	AS-002		FLOW SIGNAL TO EFFLUENT SAMPLER
S-404	(1)1"	PVC/GRS	(2)#16	TSP	CP-1	SMP-2230		FLOW SIGNAL TO INFLUENT SAMPLER
S-506	(1)1"	PVC/GRS	MANUFACTURER'S CABLE	MANUF. CABLE	AE-302	AIT-302		PRE-AERATION DO ANALYZER
S-507	(1)1"	PVC/GRS	MANUFACTURER'S CABLE	MANUF. CABLE	AE-205A, AE-205B	AIT-205		ORP/PH ANALYZER
S-508	(1)1"	PVC/GRS	MANUFACTURER'S CABLE	MANUF. CABLE	AE-209	AIT-209		DO/TEMP ANALYZER
S-509	(1)1"	GRS	(10)#16	TSP	CP-2A	AIT-302, AIT-205, AIT-209, AIT-402		MBR ANALYZERS
S-510	(1)1"	PVC/GRS	(2)#16	TSP	CP-2A	FIT-208		FEED FORWARD FLOW
S-511	(1)1"	PVC/GRS	(2)#16	TSP	CP-2A	LE-204		PRE-ANOXIC BASIN LEVEL
S-512	(1)1"	PVC/GRS	(2)#16	TSP	CP-2A	FIT-102		MBR FEED FLOW
S-513	(1)1"	PVC/GRS	(2)#16	TSP	CP-2A	PT-600		PERMEATE SUCTION PRESSURE
S-514	(1)1"	PVC/GRS	(1)CAT5e	CAT5E	CP-2A	CP-106		DRUM SCREEN CONTROL PANEL
S-515	(1)1"	GRS	(1)CAT5e	CAT5E	CP-2A	CP-4A		UV CONTROL PANEL
S-516	(1)1"	GRS	(1)CAT5e	CAT5E	CP-2A	CP-4B		UV CONTROL PANEL
S-517	(1)1"	GRS	MANUFACTURER'S CABLE	MANUF. CABLE	CP-4A	UV VESSEL A		
S-518	(1)1"	GRS	MANUFACTURER'S CABLE	MANUF. CABLE	CP-4B	UV VESSEL B		
S-519	(1)1"	GRS	(4)#16	TSP	CP-2A	PMP-902, PMP-903		FLOW CONTROL
S-520	(1)1"	GRS	(2)#16	TSP	CP-2A	FIT-655		PERMEATE FLOW
S-521	(1)1"	GRS	(2)#16	TSP	CP-2A	AIT-660		TURBIDITY ANALYZER
S-522	(1)1"	GRS	(2)#16	TSP	CP-2A	FIT-810		MBR BASIN AIR FLOW

CONDUIT AND CABLE SCHEDULE

v2.0

NUMBER	CONDUIT QUAN & SIZE	CONDUIT TYPE	WIRE FILL	WIRE TYPE	FROM	TO	VIA	REMARKS
P-100	(2)4"	PVC/GRS	(3)600KCMIL, (1)#1/0G	XHHW	UTILITY XFMR.	ATS-1	DISC-SWN	
P-101	(1)4"	PVC/GRS	(3)600KCMIL, (1)#1/0G	XHHW	GEN-100	ATS-1		(1) SPARE
P-102	(2)4"	GRS	(3)600KCMIL, (1)#1/0G	XHHW	ATS-1	MCC-1		
P-200	(1)1"	PVC/GRS	(3)#12, (1)#12G	XHHW	MCC-1	PUMP WIRE PULL BOX		MBR FEED PUMP 1, (1) SPARE
P-200A	(1)1"	PVC/GRS	MANUFACTURER'S CABLE	MANUF. CABLE	P1-010	PUMP WIRE PULL BOX		
P-201	(1)1"	PVC/GRS	(3)#12, (1)#12G	XHHW	MCC-1	PUMP WIRE PULL BOX		MBR FEED PUMP 2, (1) SPARE
P-201A	(1)1"	PVC/GRS	MANUFACTURER'S CABLE	MANUF. CABLE	P1-020	PUMP WIRE PULL BOX		
P-202	(1)1"	PVC/GRS	(3)#12, (1)#12G	XHHW	MCC-1	PUMP WIRE PULL BOX		INFLUENT PUMP 1, (1) SPARE
P-202A	(1)1"	PVC/GRS	MANUFACTURER'S CABLE	MANUF. CABLE	P0-010	PUMP WIRE PULL BOX		
P-203	(1)1"	PVC/GRS	(3)#12, (1)#12G	XHHW	MCC-1	PUMP WIRE PULL BOX		INFLUENT PUMP 2, (1) SPARE
P-203A	(1)1"	PVC/GRS	MANUFACTURER'S CABLE	MANUF. CABLE	P0-020	PUMP WIRE PULL BOX		
P-204	(1)1"	PVC/GRS	(3)#12, (4)#14, (1)#12G	XHHW	MCC-1	PUMP WIRE PULL BOX		PLANT DRAIN PUMP, TEMP, SEAL
P-204A	(1)1"	PVC/GRS	MANUFACTURER'S CABLE	MANUF. CABLE	P1-050	PUMP WIRE PULL BOX		
P-206	(1)1"	GRS	(3)#10, (1)#10G	XHHW	MCC-1	HTR-4		MECHANICAL ROOM HEATER
P-208	(1)1"	PVC/GRS	(3)#12, (1)#12G	XHHW	MCC-1	P1-040	JUNCTION BOX	SLUDGE HOLDING BASIN PUMP
P-209	(1)4"	GRS	(3)#4/0, (1)#4G	XHHW	MCC-1	CP-2B		KUBOTA MOTOR CONTROL PANEL
P-210	(1)1"	GRS	(3)#12, (1)#12G	XHHW	MCC-1	CP-3		NPW SKID PANEL
P-213	(1)1"	PVC/GRS	(3)#12, (1)#12G	XHHW	MCC-1	CP-106		DRUM SCREEN CONTROL PANEL
P-214	(1)1"	GRS	(3)#6, (1)#6G	XHHW	MCC-1	WH-1		DOMESTIC WATER HEATER
P-215	(1)1"	GRS	(3)#12, (1)#12G	XHHW	MCC-1	CP-4A		UV CONTROL PANEL
P-216	(1)1"	GRS	(3)#12, (1)#12G	XHHW	MCC-1	CP-4B		UV CONTROL PANEL
P-217	(1)1"	PVC/GRS	(3)#12, (4)#14, (1)#12G	XHHW	MCC-1	M1-060		ODOR CONTROL BLOWER, AUX, TEMP
P-300	(1)1"	GRS	(2)#12, (1)#12G	XHHW	PBD-A	CP-1		
P-301	(1)1"	GRS	(2)#12, (1)#12G	XHHW	PBD-A	HTR-1		
P-302	(1)1"	GRS	(2)#12, (1)#12G	XHHW	PBD-A	FACP-1		FIRE ALARM CONTROL PANEL
P-303	(1)1"	GRS	(2)#12, (1)#12G	XHHW	PBD-A	FAN-3		
P-304	(1)1"	GRS	(2)#12, (1)#12G	XHHW	PBD-A	FAN-2		
P-305	(1)1"	GRS	(2)#12, (1)#12G	XHHW	PBD-A	FAN-1		
P-306	(1)1"	PVC/GRS	(2)#12, (1)#12G	XHHW	PBD-A	SMP-2230		INFLUENT SAMPLER
P-307	(1)1"	GRS	(2)#12, (1)#12G	XHHW	PBD-A	AS-002		PERMEATE SAMPLER
P-308	(1)1"	PVC/GRS	(2)#12, (1)#12G	XHHW	PBD-A	HT-MBR		MBR HEAT TRACE
P-309	(1)1"	PVC/GRS	(2)#12, (1)#12G	XHHW	PBD-A	HT-NPW		NPW HEAT TRACE
P-310	(1)1"	GRS	(2)#12, (1)#12G	XHHW	PBD-A	CP-2A		
P-311	(1)1"	PVC/GRS	(2)#12, (1)#12G	XHHW	PBD-A	HT-DS		DRUM SCREEN HEAT TRACE
P-312	(1)1"	GRS	(3)#10, (1)#10G	XHHW	PBD-A	HTR-3		ELECTRICAL ROOM HEATER
P-313	(1)1"	GRS	(3)#10, (1)#10G	XHHW	PBD-A	HTR-2		CONTROL ROOM HEATER
P-314	(1)1"	GRS	(4)#10, (1)#10G	XHHW	PBD-A	POLE LIGHTS AND RECEPTACLES		SEE E3.0 FOR ROUTING
P-401	(1)1"	PVC/GRS	(2)#12, (1)#12G	XHHW	CP-1	AIT-100		H2S ANALYZER
P-402	(1)1"	PVC/GRS	(2)#12, (1)#12G	XHHW	CP-1	FIT-105		INFLUENT FLOW TRANSMITTER
P-501	(1)1"	GRS	(2)#12, (1)#12G	XHHW	CP-2B	AIT-205		ORP/PH ANALYZER
P-502	(1)1"	GRS	(2)#12, (1)#12G	XHHW	CP-2B	AIT-209		DO/TEMP ANALYZER
P-503	(1)1"	PVC/GRS	(3)#12, (1)#12G	XHHW	CP-2B	FCV-501		BIOREACTOR CONTROL VALVE
P-504	(1)1"	GRS	(2)#12, (1)#12G	XHHW	CP-2B	AIT-302		PRE-AERATION DO ANALYZER
P-505	(1)1"	GRS	(2)#12, (1)#12G	XHHW	CP-2B	AIT-402		POST-ANOXIC DO ANALYZER
P-506	(1)1"	GRS	(3)#12, (1)#12G	XHHW	CP-2B	FCV-657		PERMEATE FLOW CONTROL VALVE
P-507	(1)1"	GRS	(2)#12, (1)#12G	XHHW	CP-2B	AIT-660		TURBIDITY
P-508	(1)1"	GRS	(2)#12, (1)#12G	XHHW	CP-2B	FIT-810		MBR BASIN AIR FLOW
P-510	(1)1"	PVC/GRS	(1)3C-#12+G	VFD	CP-2B	PMP-207		FEEDFORWARD PUMP
P-511	(1)1"	PVC/GRS	(1)3C-#12+G	VFD	CP-2B	PMP-206		FEEDFORWARD PUMP
P-512	(1)1"	PVC/GRS	(3)#12, (1)#12G	XHHW	CP-2B	SCN-106		DRUM SCREEN
P-513	(1)1"	PVC/GRS	(3)#12, (1)#12G	XHHW	CP-2B	SCN-107		DRUM SCREEN
P-514	(1)1"	PVC/GRS	(3)#12, (1)#12G	XHHW	CP-2B	CWC-105	30A DISC., PULL BOX 1	COMPACTOR
P-515	(1)1"	PVC/GRS	(3)#12, (1)#12G	XHHW	CP-2B	MXR-201		PRE-ANOXIC MIXER
P-516	(1)1"	PVC/GRS	(3)#12, (1)#12G	XHHW	CP-2B	MXR-401		POST-ANOXIC MIXER
P-517	(1)1"	PVC/GRS	(3)#12, (1)#12G	XHHW	CP-2B	MXR-301		PRE-AERATION MIXER
P-518	(1)1"	GRS	(6)#12, (2)#12G	XHHW	CP-2B	PMP-902, PMP-903		CARBON, ALKALINE PUMPS
P-519	(1)1"	GRS	(2)3C-#12+G	VFD	CP-2B	P1-651		PERMEATE PUMP 1
P-520	(1)1"	GRS	(2)3C-#12+G	VFD	CP-2B	P1-652		PERMEATE PUMP 2
P-521	(1)1"	PVC/GRS	(2)#12, (1)#12G	XHHW	CP-2B	FIT-102		MBR FEED FLOW
P-522	(1)1"	GRS	(2)#12, (1)#12G	XHHW	CP-2B	FIT-655		PERMEATE FLOW
P-523	(1)1"	PVC/GRS	(2)#12, (1)#12G	XHHW	CP-2B	FIT-208		FEEDFORWARD FLOW
P-524	(1)1"	GRS	(2)3C-#10+G	VFD	CP-2B	BLR-801		PA BLOWER
P-525	(1)1"	GRS	(2)3C-#10+G	VFD	CP-2B	BLR-802		MBR+PA STANDBY BLOWER
P-526	(1)1"	GRS	(2)3C-#10+G	VFD	CP-2B	BLR-803		MBR BLOWER
P-527	(1)1"	GRS	(3)#12, (1)#12G	XHHW	CP-2B	BLR-804		SHT BLOWER
P-528	(1)1"	GRS	(2)#12, (1)#12G	XHHW	CP-2B	P-805		AIR PUMP 1
P-529	(1)1"	GRS	(2)#12, (1)#12G	XHHW	CP-2B	P-806		AIR PUMP 2
P-601	(1)3/4"	PVC/GRS	(3)#12, (1)#12G	XHHW	CP-106	M-SCN-106		DRUM SCREEN 1 MOTOR
P-602	(1)3/4"	PVC/GRS	(3)#12, (1)#12G	XHHW	CP-106	M-SCN-107		DRUM SCREEN 2 MOTOR
P-603	(1)3/4"	PVC/GRS	(2)#12, (1)#12G	XHHW	CP-106	SV-SCN-106		DRUM SCREEN 1 SOLENOID
P-604	(1)3/4"	PVC/GRS	(2)#12, (1)#12G	XHHW	CP-106	SV-SCN-107		DRUM SCREEN 2 SOLENOID
P-605	(1)3/4"	PVC/GRS	(2)#12, (1)#12G	XHHW	CP-106	SV-CWC-105		COMPACTOR SOLENOID
P-606	(1)3/4"	PVC/GRS	(3)#12, (1)#12G	XHHW	CP-106	M-CWC-105		COMPACTOR MOTOR

NOTES:

1. CONDUIT AND CONDUCTORS FOR OPERATIONS BUILDING EXTERIOR AND INTERIOR LIGHTING AND RECEPTACLES NOT SHOWN IN SCHEDULE.
2. SEE SHEET B-E6.1 FOR PANELBOARD SCHEDULE AND SHEET B-E4.0 FOR LIGHTING AND RECEPTACLE PLAN. PROVIDE MINIMUM ¾" GRS WITH #12 CONDUCTORS AT QUANTITIES TO PROVIDE WORKING SYSTEM AS DRAWN. PROVIDE EQUIPMENT GROUNDING CONDUCTOR AND DEDICATED NEUTRAL CONDUCTORS.

Call 811 two business days before you dig

BID SET

CAD NO.

ACTION	BY	DATE
DESIGNED	MC	04/11/25
DRAWN	DP	04/11/25
CHECKED (FIELD)		
CHECKED (HDQTS.)		

REVISIONS: NO. | INT. | APP. | DATE

MARVIN C. CASANOVA — STATE OF WASHINGTON — 48989 — REGISTERED PROFESSIONAL ENGINEER — 4/11/2025

REGISTERED STAMP

WASHINGTON STATE PARKS AND RECREATION COMMISSION

NISQUALLY STATE PARK

PHASE 3A MAINTENANCE BUILDING AND WWTF

ELECTRICAL CONDUIT AND CABLE SCHEDULE

B-E6.2

SCALE: NO SCALE

PARKS FILE#

U:\PSO\Projects\Clients\4763-RW Droll\216-4763-010 NisquallyParkWWOptions\99Svcs\CADD\DWG\PS18062A-E6.2.dwg
Apr-11-25 8:57am

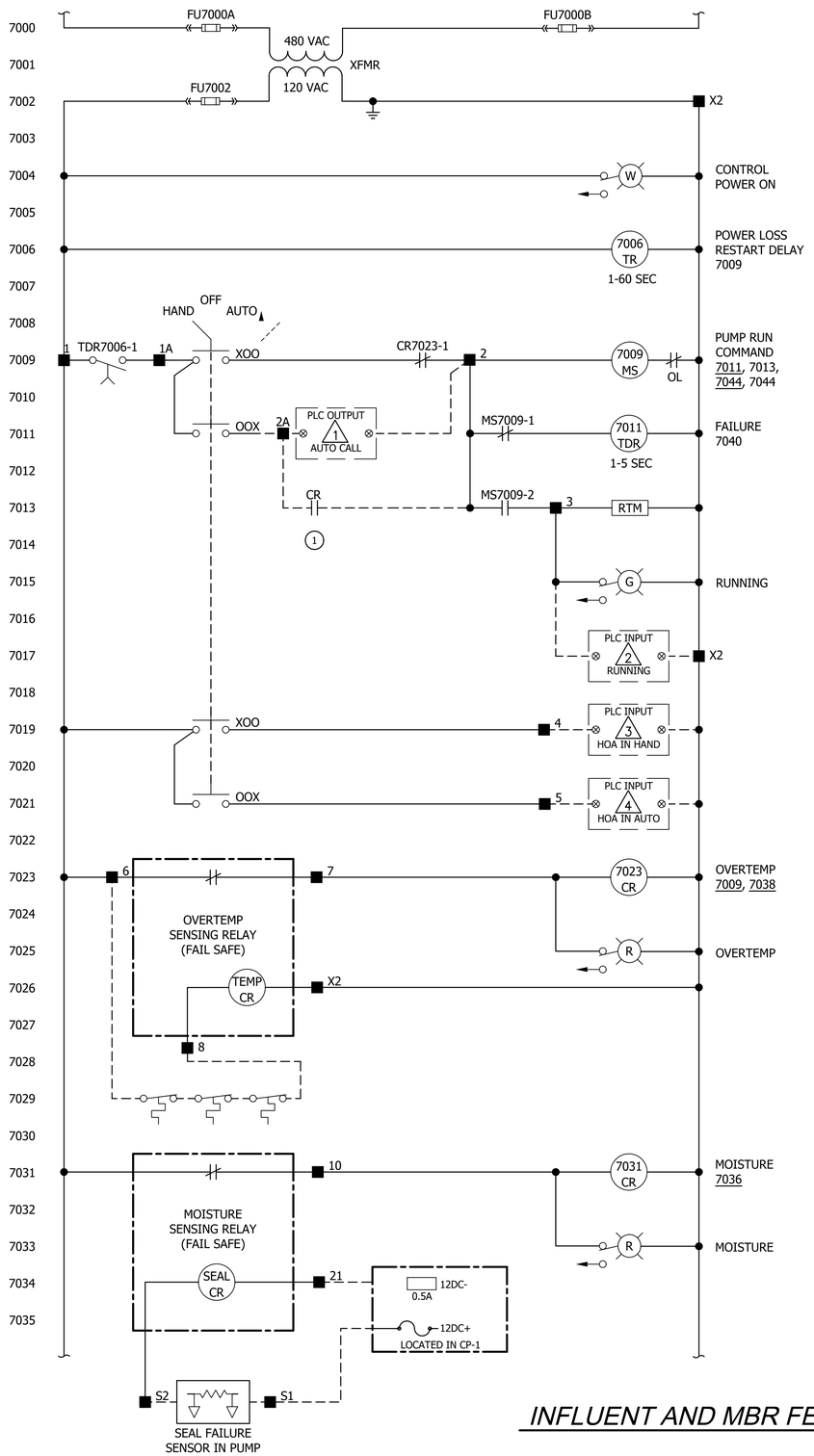

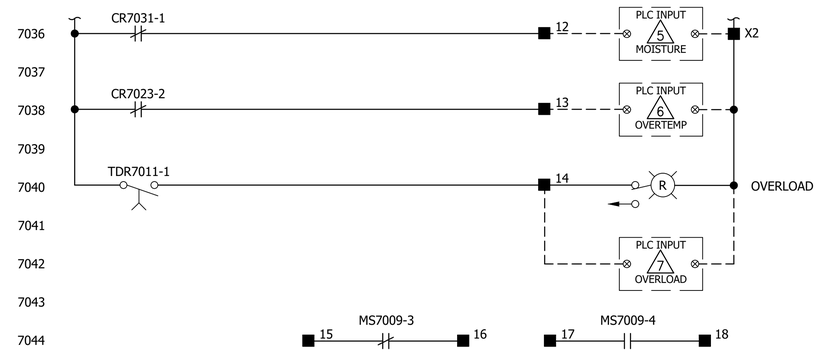

NOTES:

1. FROM INFLUENT AND MBR FEED PUMP BACKUP FLOAT CONTROL CIRCUIT, SEE B-E7.1.

PLC I/O TABLE

NOTE	INFLUENT PUMP 1	INFLUENT PUMP 2	MBR FEED PUMP 1	MBR FEED PUMP 2
1	DO 10.00	DO 10.01	DO 10.02	DO 10.03
2	CR 05.02	CR 06.02	CR 07.02	CR 08.02
3	CR 05.00	CR 06.00	CR 07.00	CR 08.00
4	CR 05.01	CR 06.01	CR 07.01	CR 08.01
5	CR 05.05	CR 06.05	CR 07.05	CR 08.05
6	CR 05.04	CR 06.04	CR 07.04	CR 08.04
7	CR 05.03	CR 06.03	CR 07.03	CR 08.03

TERMINAL BLOCK LEGEND

■ X MCC-1 TERMINALS

ELEMENTARY 1A
INFLUENT AND MBR FEED PUMP MOTOR CONTROL CIRCUIT (TYP)

BID SET

Call 811 two business days before you dig

SHEET 200 OF 226

CAD NO.

NO.	REVISIONS	INT.	APP.	DATE

ACTION	BY	DATE
DESIGNED	MC	04/11/25
DRAWN	JV	04/11/25
CHECKED (FIELD)		
CHECKED (HDQTS.)		

MARVIN C. CASANOVA STATE OF WASHINGTON 48989 REGISTERED PROFESSIONAL ENGINEER 4/11/2025

REGISTERED STAMP

WASHINGTON STATE PARKS AND RECREATION COMMISSION

NISQUALLY STATE PARK

PHASE 3A MAINTENANCE BUILDING AND WWTF

MOTOR CONTROL ELEMENTARIES 1

B-E7.0

SCALE

NO SCALE

PARKS FILE#

U:\PSO\Projects\Clients\4763-RW Droll\216-4763-010 NisquallyParkWWOptions\99Svcs\CADD\DWG\PS18062A-E7.0.dwg
Apr-11-25 8:56am

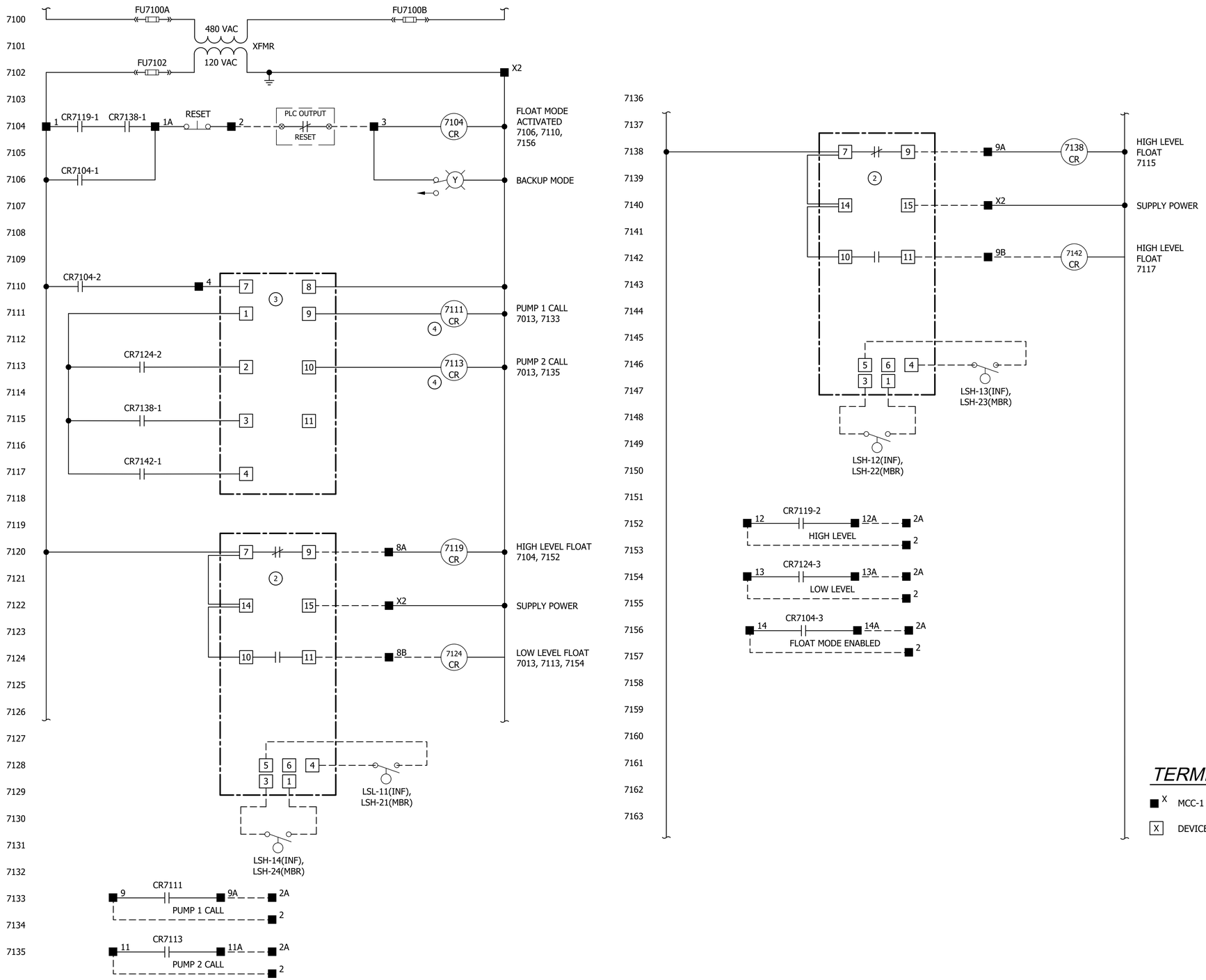

NOTES:

1. DEVICES SHOWN ARE SCHEMATIC ONLY. ACTUAL TERMINALS AND CONNECTIONS DEPEND ON MANUFACTURER SELECTED.

(2) INTRINSICALLY SAFE RELAY.

(3) PROVIDE ATC DIVERSIFIED ELECTRONICS ARM-120-ACEP INTRINSICALLY SAFE TRIPLEX CONTROLLER WITH SEQUENCE-ON-SIMULTANEOUS-OFF (SOSO) OPERATION, 120VAC CONTROL VOLTAGE, SELECTOR SWITCH, AND PANEL MOUNTED TO BE ACCESSIBLE WITHOUT OPENING MCC BUCKET COVER.

(4) PROVIDE N.O. CONTACT ON RELAY AND WIRE TO CORRESPONDING INFLUENT OR MBR FEED PUMP CONTROL CIRCUIT. SEE ELEMENTARY 1A LINE 7013 ON B-E7.0 FOR MORE INFORMATION.

TERMINAL BLOCK LEGEND

■ X MCC-1 TERMINALS

X DEVICE TERMINALS

BID SET

ELEMENTARY 1B
INFLUENT AND MBR FEED PUMP BACKUP FLOAT CONTROL CIRCUIT

Call 811 two business days before you dig

SHEET 201 OF 226

CAD NO.

	DATE	APP.	INT.	REVISIONS	NO.

ACTION	BY	DATE
DESIGNED	MC	04/11/25
DRAWN	JV	04/11/25
CHECKED (FIELD)		
CHECKED (HDQTS.)		

MARVIN C. CASANOVA, STATE OF WASHINGTON, 48989, REGISTERED PROFESSIONAL ENGINEER
4/11/2025

REGISTERED STAMP

WASHINGTON STATE PARKS AND RECREATION COMMISSION

NISQUALLY STATE PARK

PHASE 3A MAINTENANCE BUILDING AND WWTF

MOTOR CONTROL ELEMENTARIES 2

B-E7.1

SCALE

NO SCALE

PARKS FILE#

U:\PSO\Projects\Clients\4763-RW Droll\216-4763-010 Nisqually PorkWWOptions\99Svcs\CADD\DWG\PS180620-E7.1.dwg
Apr-11-25 9:00am

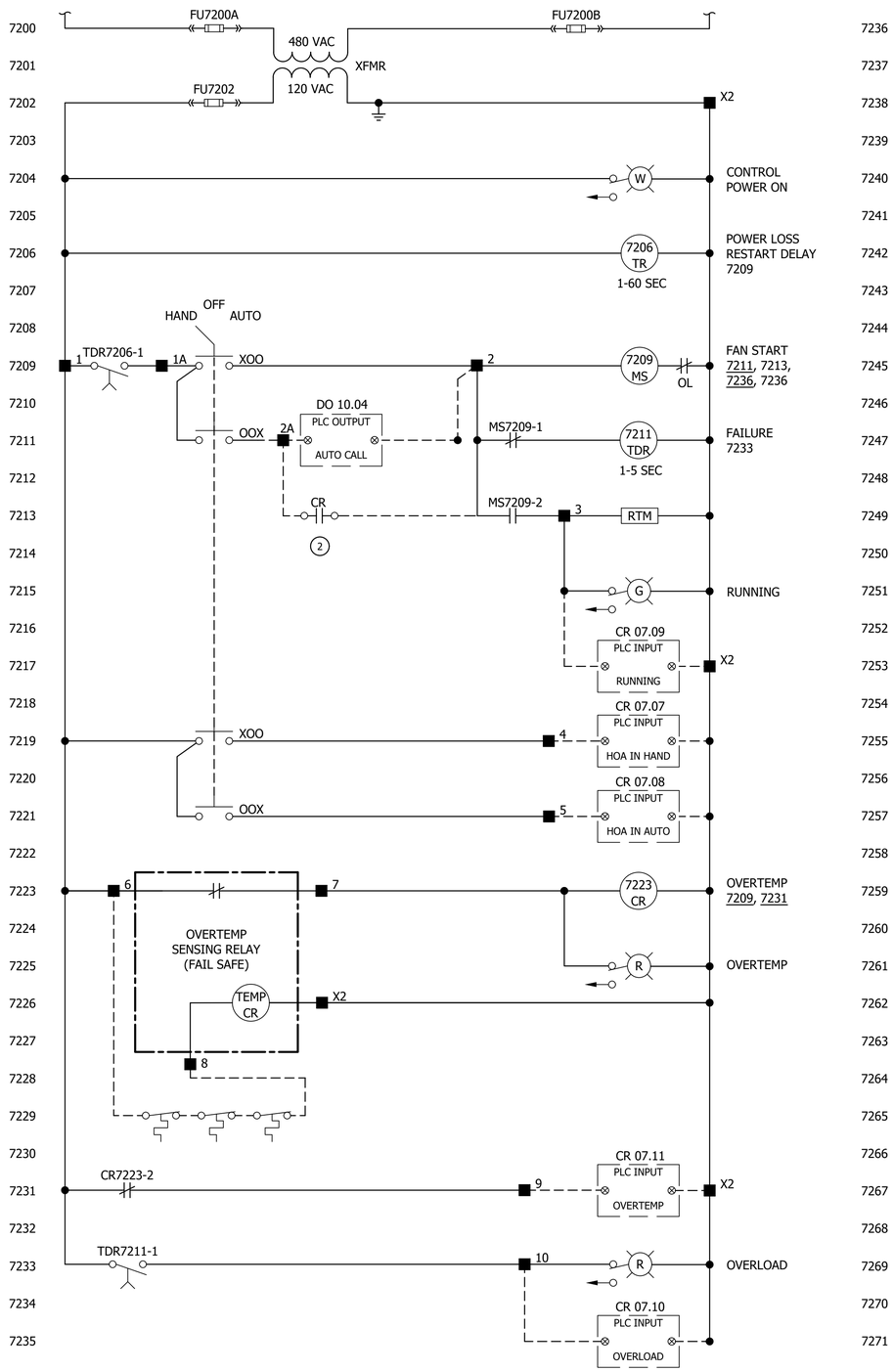

NOTES:

1. DEVICES SHOWN ARE SCHEMATIC ONLY. ACTUAL TERMINALS AND CONNECTIONS DEPEND ON MANUFACTURER SELECTED.

2. FROM INFLUENT AND MBR FEED PUMP BACKUP FLOAT CONTROL CIRCUIT, SEE B-E7.1.

TERMINAL BLOCK LEGEND

■ X MCC-1 TERMINALS

ELEMENTARY 1C
ODOR CONTROL MOTOR CONTROL CIRCUIT

BID SET

Call 811 two business days before you dig

SHEET 202 OF 226

CAD NO.

NO.	REVISIONS	INT.	APP.	DATE

ACTION	BY	DATE
DESIGNED	MC	04/11/25
DRAWN	JV	04/11/25
CHECKED (FIELD)		
CHECKED (HDQTS.)		

MARVIN C. CASANOVA STATE OF WASHINGTON 48989 REGISTERED PROFESSIONAL ENGINEER
4/11/2025
REGISTERED STAMP

WASHINGTON STATE PARKS AND RECREATION COMMISSION

NISQUALLY STATE PARK

PHASE 3A MAINTENANCE BUILDING AND WWTF

MOTOR CONTROL ELEMENTARIES 3

B-E7.2

SCALE
NO SCALE

PARKS FILE#

U:\PSO\Projects\Clients\4763-RW Droll\216-4763-010 NisquallyParkWWOptions\99Svcs\CADD\DWG\PS18062A-E7.2.dwg
Apr-11-25 9:06am

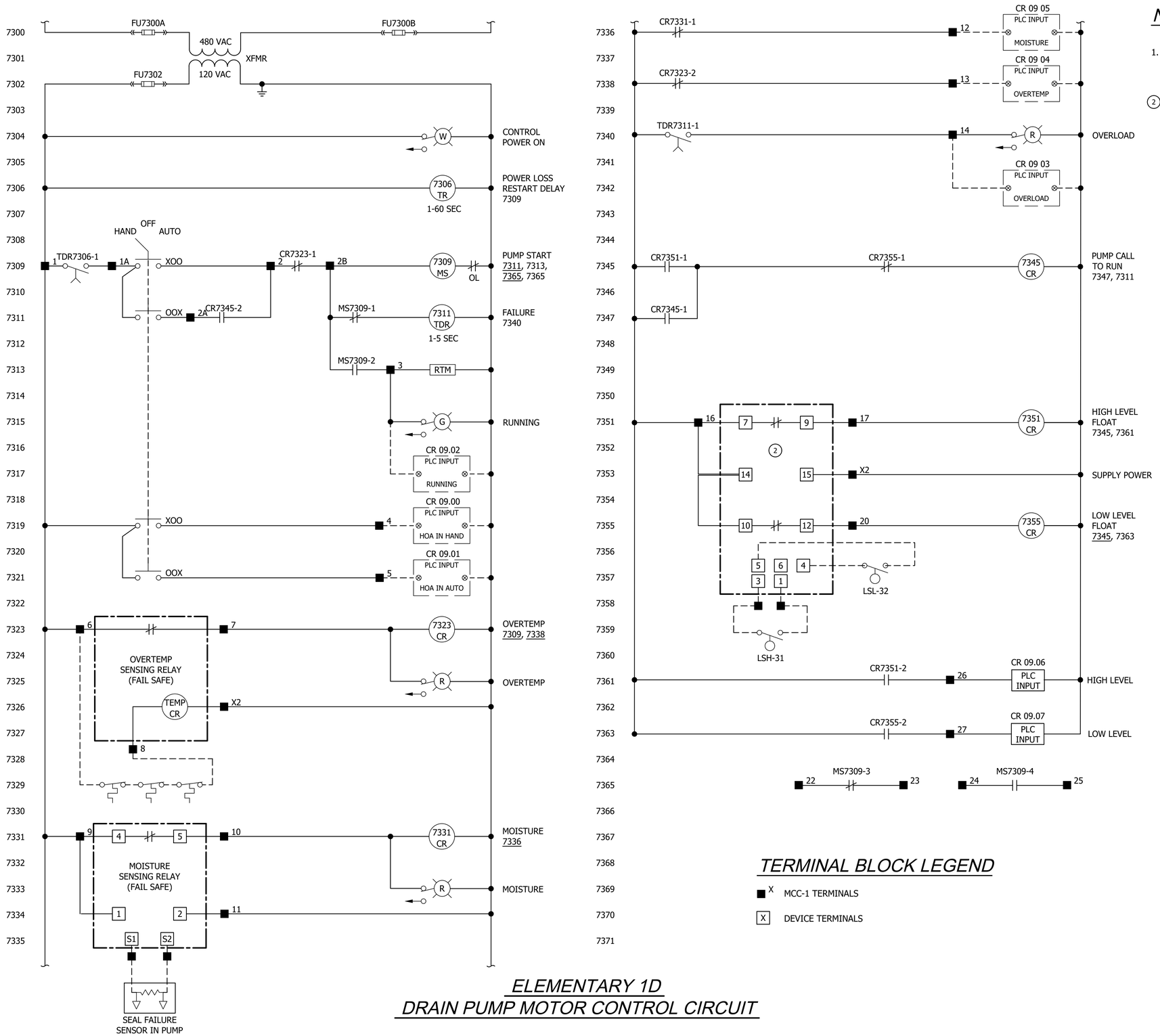

NOTES:

1. DEVICES SHOWN ARE SCHEMATIC ONLY. ACTUAL TERMINALS AND CONNECTIONS DEPEND ON MANUFACTURER SELECTED.

(2) PROVIDE INTRINSICALLY SAFE RELAY.

TERMINAL BLOCK LEGEND

■ X MCC-1 TERMINALS

[X] DEVICE TERMINALS

ELEMENTARY 1D
DRAIN PUMP MOTOR CONTROL CIRCUIT

Call 811 two business days before you dig

SHEET 203 OF 226

BID SET

CAD NO.

	DATE	APP.	INT.	REVISIONS	NO.

ACTION	BY	DATE
DESIGNED	MC	04/11/25
DRAWN	JV	04/11/25
CHECKED (FIELD)		
CHECKED (HDQTS.)		

MARVIN C. CASANOVA
STATE OF WASHINGTON
48989
REGISTERED PROFESSIONAL ENGINEER
4/11/2025

REGISTERED STAMP

WASHINGTON STATE PARKS AND RECREATION COMMISSION

NISQUALLY STATE PARK

PHASE 3A MAINTENANCE BUILDING AND WWTF

MOTOR CONTROL ELEMENTARIES 4

B-E7.3

SCALE

NO SCALE

PARKS FILE#

U:\PSO\Projects\Clients\4763-RW Droll\216-4763-010 Nisqually\ParkWWOptions\995vcs\CADD\DWG\PS18062A-E7.3.dwg
Apr-11-25 9:05am

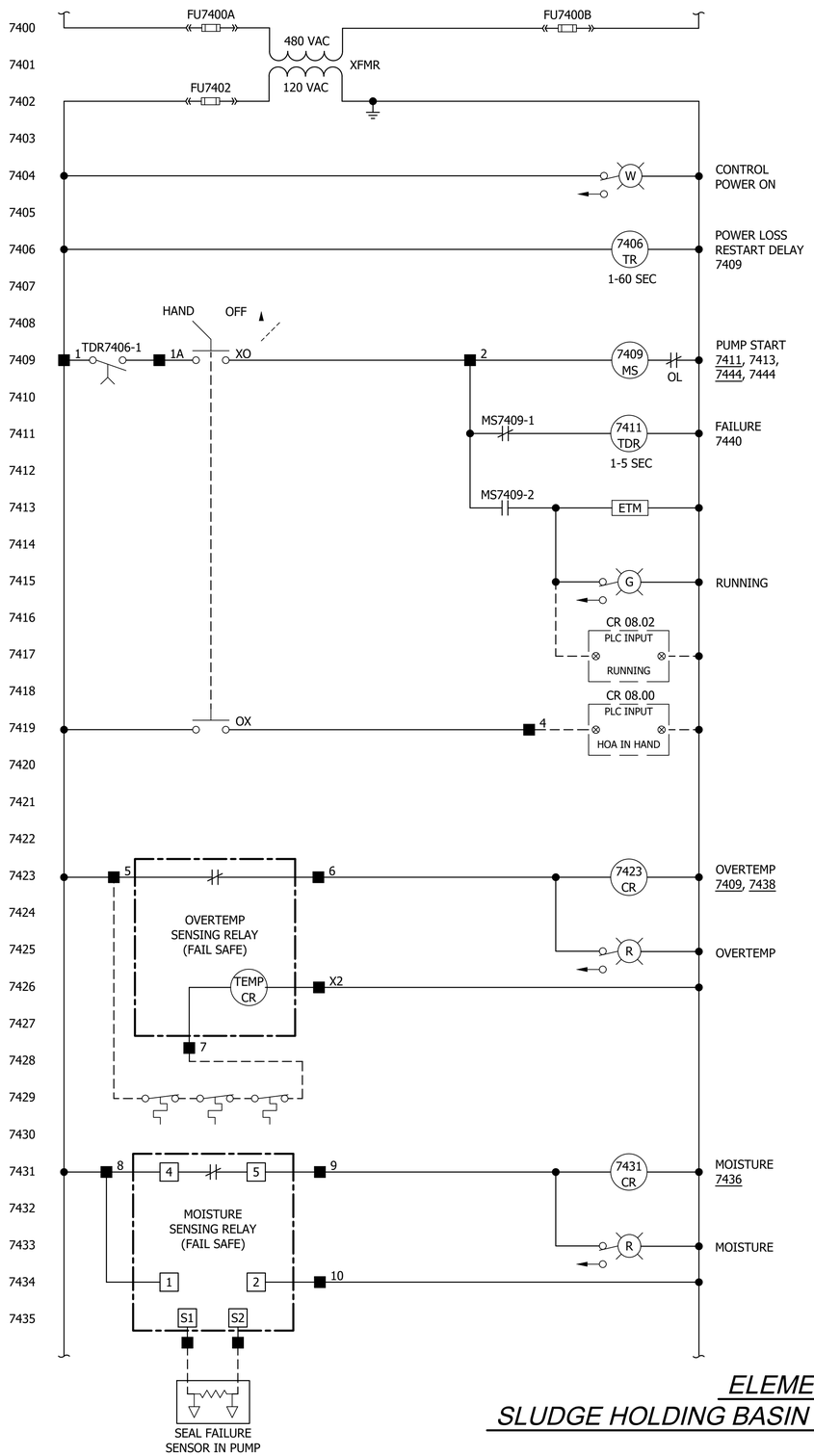

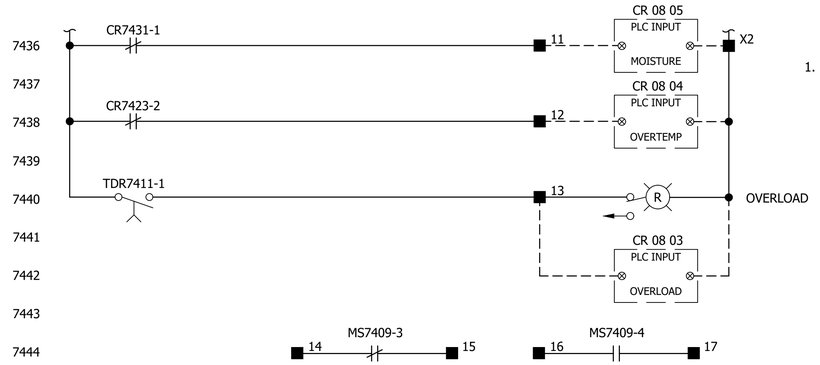

NOTES:

1. DEVICES SHOWN ARE SCHEMATIC ONLY. ACTUAL TERMINALS AND CONNECTIONS DEPEND ON MANUFACTURER SELECTED.

TERMINAL BLOCK LEGEND

■ X MCC-1 TERMINALS

[X] DEVICE TERMINALS

ELEMENTARY 1E
SLUDGE HOLDING BASIN PUMP MOTOR CONTROL CIRCUIT

Call 811 two business days before you dig

SHEET 204 OF 226

BID SET

CAD NO.

	DATE
	APP.
	INT.
	REVISIONS
	NO.

ACTION	BY	DATE
DESIGNED	MC	04/11/25
DRAWN	JV	04/11/25
CHECKED (FIELD)		
CHECKED (HDQTS.)		

MARVIN C. CASANOVA
STATE OF WASHINGTON
48989
REGISTERED PROFESSIONAL ENGINEER
4/11/2025

REGISTERED STAMP

WASHINGTON STATE PARKS AND RECREATION COMMISSION

NISQUALLY STATE PARK

PHASE 3A MAINTENANCE BUILDING AND WWTF

MOTOR CONTROL ELEMENTARIES 5

B-E7.4

SCALE

NO SCALE

PARKS FILE#

U:\PSO\Projects\Clients\4763-RW Droll\216-4763-010 Nisqually\ParkWWOptions\99Svcs\CADD\DWG\PS18062A-E7.4.dwg
Apr-11-25 9:04am

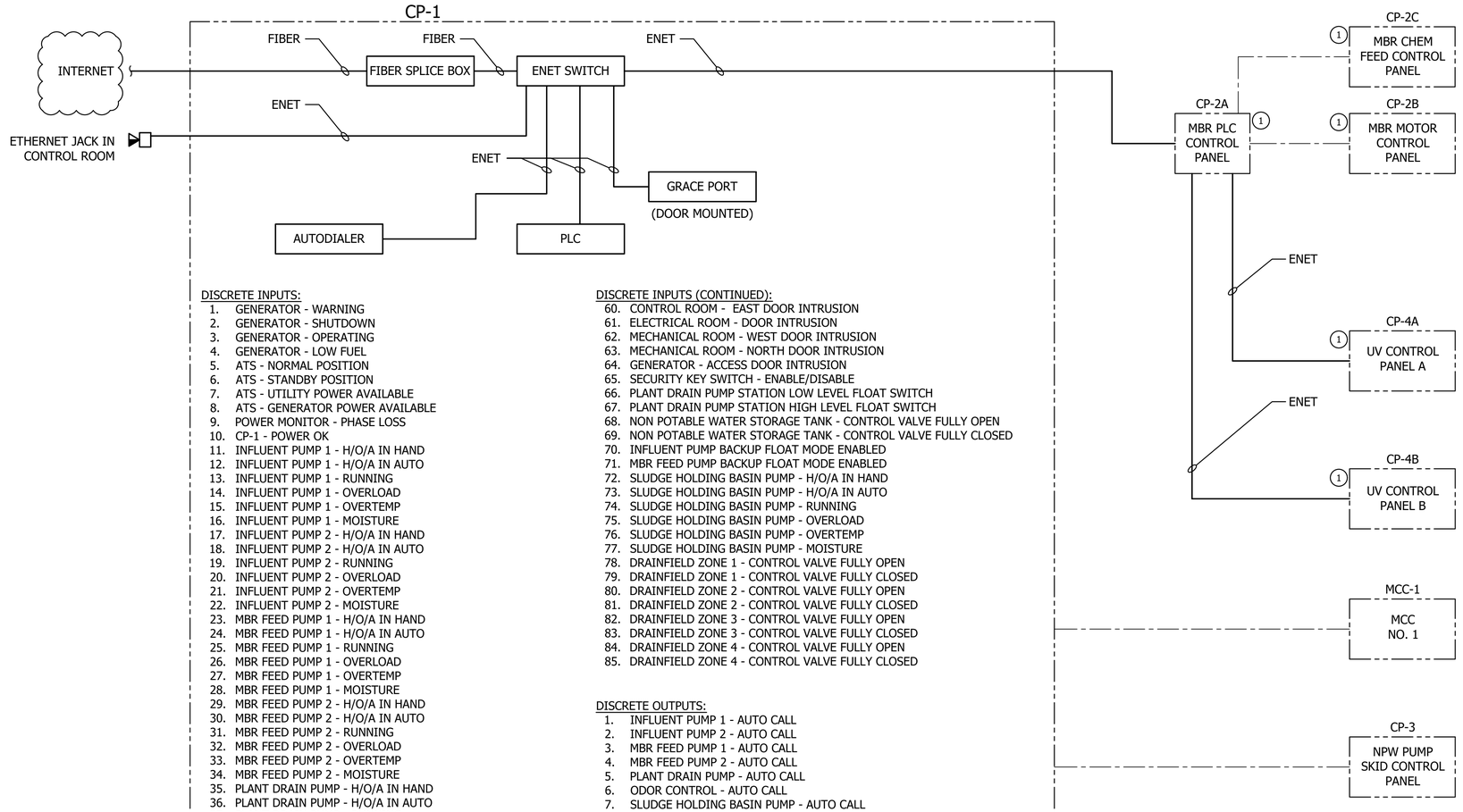

DISCRETE INPUTS:

1. GENERATOR - WARNING
2. GENERATOR - SHUTDOWN
3. GENERATOR - OPERATING
4. GENERATOR - LOW FUEL
5. ATS - NORMAL POSITION
6. ATS - STANDBY POSITION
7. ATS - UTILITY POWER AVAILABLE
8. ATS - GENERATOR POWER AVAILABLE
9. POWER MONITOR - PHASE LOSS
10. CP-1 - POWER OK
11. INFLUENT PUMP 1 - H/O/A IN HAND
12. INFLUENT PUMP 1 - H/O/A IN AUTO
13. INFLUENT PUMP 1 - RUNNING
14. INFLUENT PUMP 1 - OVERLOAD
15. INFLUENT PUMP 1 - OVERTEMP
16. INFLUENT PUMP 1 - MOISTURE
17. INFLUENT PUMP 2 - H/O/A IN HAND
18. INFLUENT PUMP 2 - H/O/A IN AUTO
19. INFLUENT PUMP 2 - RUNNING
20. INFLUENT PUMP 2 - OVERLOAD
21. INFLUENT PUMP 2 - OVERTEMP
22. INFLUENT PUMP 2 - MOISTURE
23. MBR FEED PUMP 1 - H/O/A IN HAND
24. MBR FEED PUMP 1 - H/O/A IN AUTO
25. MBR FEED PUMP 1 - RUNNING
26. MBR FEED PUMP 1 - OVERLOAD
27. MBR FEED PUMP 1 - OVERTEMP
28. MBR FEED PUMP 1 - MOISTURE
29. MBR FEED PUMP 2 - H/O/A IN HAND
30. MBR FEED PUMP 2 - H/O/A IN AUTO
31. MBR FEED PUMP 2 - RUNNING
32. MBR FEED PUMP 2 - OVERLOAD
33. MBR FEED PUMP 2 - OVERTEMP
34. MBR FEED PUMP 2 - MOISTURE
35. PLANT DRAIN PUMP - H/O/A IN HAND
36. PLANT DRAIN PUMP - H/O/A IN AUTO
37. PLANT DRAIN PUMP - RUNNING
38. PLANT DRAIN PUMP - OVERLOAD
39. PLANT DRAIN PUMP - OVERTEMP
40. PLANT DRAIN PUMP - MOISTURE
41. ODOR CONTROL - H/O/A IN HAND
42. ODOR CONTROL - H/O/A IN AUTO
43. ODOR CONTROL - RUNNING
44. ODOR CONTROL - OVERLOAD
45. ODOR CONTROL - OVERTEMP
46. NPW PUMP 1 - H/O/A IN AUTO
47. NPW PUMP 1 - RUNNING
48. NPW PUMP 1 - FAILURE
49. NPW PUMP 2 - H/O/A IN AUTO
50. NPW PUMP 2 - RUNNING
51. NPW PUMP 2 - FAILURE
52. NPW SYSTEM - LOW PRESSURE ALARM
53. NPW SYSTEM - HIGH PRESSURE ALARM
54. INFLUENT WET WELL LOW LEVEL FLOAT SWITCH
55. INFLUENT WET WELL HIGH LEVEL FLOAT SWITCH
56. MBR FEED WET WELL LOW LEVEL FLOAT SWITCH
57. MBR FEED WET WELL HIGH LEVEL FLOAT SWITCH
58. KUBOTA CONTROL PANEL INFLUENT PERMISSIVE
59. CONTROL ROOM - NORTH DOOR INTRUSION

DISCRETE INPUTS (CONTINUED):

60. CONTROL ROOM - EAST DOOR INTRUSION
61. ELECTRICAL ROOM - DOOR INTRUSION
62. MECHANICAL ROOM - WEST DOOR INTRUSION
63. MECHANICAL ROOM - NORTH DOOR INTRUSION
64. GENERATOR - ACCESS DOOR INTRUSION
65. SECURITY KEY SWITCH - ENABLE/DISABLE
66. PLANT DRAIN PUMP STATION LOW LEVEL FLOAT SWITCH
67. PLANT DRAIN PUMP STATION HIGH LEVEL FLOAT SWITCH
68. NON POTABLE WATER STORAGE TANK - CONTROL VALVE FULLY OPEN
69. NON POTABLE WATER STORAGE TANK - CONTROL VALVE FULLY CLOSED
70. INFLUENT PUMP BACKUP FLOAT MODE ENABLED
71. MBR FEED PUMP BACKUP FLOAT MODE ENABLED
72. SLUDGE HOLDING BASIN PUMP - H/O/A IN HAND
73. SLUDGE HOLDING BASIN PUMP - H/O/A IN AUTO
74. SLUDGE HOLDING BASIN PUMP - RUNNING
75. SLUDGE HOLDING BASIN PUMP - OVERLOAD
76. SLUDGE HOLDING BASIN PUMP - OVERTEMP
77. SLUDGE HOLDING BASIN PUMP - MOISTURE
78. DRAINFIELD ZONE 1 - CONTROL VALVE FULLY OPEN
79. DRAINFIELD ZONE 1 - CONTROL VALVE FULLY CLOSED
80. DRAINFIELD ZONE 2 - CONTROL VALVE FULLY OPEN
81. DRAINFIELD ZONE 2 - CONTROL VALVE FULLY CLOSED
82. DRAINFIELD ZONE 3 - CONTROL VALVE FULLY OPEN
83. DRAINFIELD ZONE 3 - CONTROL VALVE FULLY CLOSED
84. DRAINFIELD ZONE 4 - CONTROL VALVE FULLY OPEN
85. DRAINFIELD ZONE 4 - CONTROL VALVE FULLY CLOSED

DISCRETE OUTPUTS:

1. INFLUENT PUMP 1 - AUTO CALL
2. INFLUENT PUMP 2 - AUTO CALL
3. MBR FEED PUMP 1 - AUTO CALL
4. MBR FEED PUMP 2 - AUTO CALL
5. PLANT DRAIN PUMP - AUTO CALL
6. ODOR CONTROL - AUTO CALL
7. SLUDGE HOLDING BASIN PUMP - AUTO CALL
8. NON POTABLE WATER STORAGE TANK - OPEN CONTROL VALVE
9. NON POTABLE WATER STORAGE TANK - CLOSE CONTROL VALVE
10. INFLUENT PUMP BACKUP FLOAT MODE RESET
11. MBR FEED PUMP BACKUP FLOAT MODE RESET
12. DRAINFIELD ZONE 1 - OPEN CONTROL VALVE
13. DRAINFIELD ZONE 1 - CLOSE CONTROL VALVE
14. DRAINFIELD ZONE 2 - OPEN CONTROL VALVE
15. DRAINFIELD ZONE 2 - CLOSE CONTROL VALVE
16. DRAINFIELD ZONE 3 - OPEN CONTROL VALVE
17. DRAINFIELD ZONE 3 - CLOSE CONTROL VALVE
18. DRAINFIELD ZONE 4 - OPEN CONTROL VALVE
19. DRAINFIELD ZONE 4 - CLOSE CONTROL VALVE

ANALOG INPUTS:

1. INFLUENT WET WELL LEVEL (4-20mA)
2. MBR FEED WET WELL LEVEL (4-20mA)
3. MBR FEED FLOW RATE (4-20mA)
4. NON POTABLE WATER STORAGE TANK LEVEL (4-20mA)
5. INFLUENT FLOWRATE (4-20mA)
6. ODOR CONTROL H2S LEVEL (4-20mA)

ANALOG OUTPUTS:

1. INFLUENT SAMPLER FLOWRATE (4-20mA)
2. EFFLUENT SAMPLER FLOWRATE (4-20mA)

PLANT CONTROL PANEL

NOTES:

(1) (PROVIDED BY EQUIPMENT MANUFACTURER) REFER TO MBR DRAWING AND SPECIFICATIONS FOR INFORMATION ON I/O AND CONTROLS.

LEGEND:

FIELD WIRING

SP SURGE PROTECTOR

BID SET

Call 811 two business days before you dig

SHEET 205 OF 226

CAD NO.

	DATE	APP.	INT.	REVISIONS	NO.

ACTION	BY	DATE
DESIGNED	MC	04/11/25
DRAWN	KT	04/11/25
CHECKED (FIELD)		
CHECKED (HDQTS.)		

MARVIN C. CASANOVA
STATE OF WASHINGTON
48989
REGISTERED PROFESSIONAL ENGINEER
4/11/2025

REGISTERED STAMP

WASHINGTON STATE PARKS AND RECREATION COMMISSION

NISQUALLY STATE PARK

PHASE 3A MAINTENANCE BUILDING AND WWTF

SCADA BLOCK DIAGRAM

B-I1.0

SCALE

NO SCALE

PARKS FILE#

U:\PSO\Projects\Clients\4763-RW Droll\216-4763-010 Nisqually PorkWWOptions\99Svcs\CADD\DWG\PS18062A-I1.0.dwg
Apr-11-25 9:18am

GENERAL CODE INFORMATION

Project Name: **Nisqually State Park Treatment Facility**

Address: **4**3371 MASHEL PRAIRIE RD, Eatonville, WA 98328

Jurisdiction: Pierce County
Department of Planning and Land Services

RESTROOM/SHOWER – BUILDING CODE ANALYSIS
2018 IBC & WAC 51-50 4TH PRINTING

PROJECT DESCRIPTION:
THE SCOPE OF WORK IS TO PROVIDE A 362 GSF AQUA STORAGE PUMP HOUSE. THE BUILDING WILL HAVE NON-SEPARATED OCCUPANCIES.

CODES REFERENCED:

INTERNATIONAL BUILDING CODE (IBC)	2021 EDITION
INTERNATIONAL MECHANICAL CODE (IMC)	2021 EDITION
INTERNATIONAL FIRE CODE (IFC)	2021 EDITION
UNIFORM PLUMBING CODE (UPC)	2021 EDITION
NATIONAL ELECTRICAL CODE (NFPA 70)	2021 EDITION
WASHINGTON STATE BUILDING CODE (IBC):	WAC 51-50
WASHINGTON STATE MECHANICAL CODE (IMC):	WAC 51-52
WASHINGTON STATE FIRE CODE (IFC):	WAC 51-54A
ACCESSIBILE & USABLE BUILDINGS & FACILITIES (ICC/ANSIA117.1)	2017

INTERNATIONAL BUILDING CODE:

CHAPTER 3 OCCUPANCY CLASSIFICATION AND USE
USE AND OCCUPANCY CLASSFICIATION
S-1 STORAGE
U UTILITY

SECTION 311 STORAGE GROUP S
311.2 MODERATE-HAZARD STORAGE, GROUP S-1. STORAGE GROUP S-1 OCCUPANCIES ARE BUILDINGS OCCUPIED FOR STORAGE USES THAT ARE NOT CLASSIFIED AS GROUP S-2.

SECTION 312 UTILITY AND MISCELLANEOUS GROUP U
312.1 GENERAL. BUILDINGS AND STRUCTURES OF AN ACCESSORY CHARACTER AND MISCELLANEOUS STRUCTURES NOT CLASSIFIED IN ANY SPECIFIC OCCUPANCY SHALL BE CONSTRUCTED, EQUIPPED AND MAINTAINED TO CONFORM TO THE REQUIREMENTS OF THIS CODE COMMENSURATE WITH THE FIRE AND LIFE HAZARD INCIDENTAL TO THEIR OCCUPANCY.

CHAPTER 5 GENERAL BUILDING HEIGHTS AND AREAS
(WAC) TABLE 504.3 ALLOWABLE BUILDING HEIGHT IN FEET ABOVE GRADE PLANE
OCCUPANCY CLASSIFICATION 'S' AND 'U' = NON-SPRINKLERED, TYPE V-B = 40 FT ABOVE GRADE PLANE
PROVIDED: 26' - 4"

(WAC) TABLE 504.4 ALLOWABLE NUMBER OF STORIES ABOVE GRADE PLANE
OCCUPANCY CLASSIFICATION 'S' AND 'U' = NON-SPRINKLERED, TYPE V-B = 1 STORY ABOVE GRADE PLANE
PROVIDED: 1 STORY

(WAC) TABLE 506.2 ALLOWABLE AREA FACTOR (AT = NS, S1, S13R, S13D OR SM, AS APPLICABLE) IN SQUARE FEET
OCCUPANCY CLASSIFICATION 'U' = NON-SPRINKLERED, SINGLE-STORY, TYPE V-B = 5,500 SF *(MOST RESTRICTIVE)*
PROVIDED: 1,307 GSF

SECTION 508 MIXED USE AND OCCUPANCY
508.3 NONSEPARATED OCCUPANCIES. BUILDINGS OR PORTIONS OF BUILDINGS THAT COMPLY WITH THE PROVISIONS OF THIS SECTION SHALL BE CONSIDERED AS NONSEPARATED OCCUPANCIES.
508.3.1 OCCUPANCY CLASSIFICATION. NONSEPARATED OCCUPANCIES SHALL BE INDIVIDUALLY CLASSIFIED IN ACCORDANCE WITH SECTION 302.1. THE REQUIREMENTS OF THIS CODE SHALL APPLY TO EACH PORTION OF THE BUILDING BASED ON THE OCCUPANCY CLASSIFICATION OF THAT SPACE. IN ADDITION, THE MOST RESTRICTIVE PROVISIONS OF CHAPTER 9 THAT APPLY TO THE NONSEPARATED OCCUPANCIES SHALL APPLY TO THE TOTAL NONSEPARATED OCCUPANCY AREA.

CHAPTER 6 TYPES OF CONSTRUCTION
(WAC) TABLE 601 FIRE-RESISTANCE RATING REQUIREMENTS FOR BUILDING ELEMENTS: ***TYPE V-B***

STRUCTURAL FRAME	0 HOURS
BEARING WALL (INTERIOR & EXTERIOR)	0 HOURS
NON BEARING WALLS (EXTERIOR)	TABLE 602
1 HOUR: X>5FT, 5 FT ≤ 10 FT	
0 HOUR: 10 FT ≤ X < 30, X ≥ 30 FT	
NON-BEARING WALLS (INTERIOR)	0 HOURS
FLOOR CONSTRUCTION	0 HOURS
ROOF CONSTRUCTION	0 HOURS

CHAPTER 08 INTERIOR FINISHES
TABLE 803.13 INTERIOR WALL AND CEILING FINISH REQUIREMENTS BY OCCUPANCY

GROUP	EXIT PASSAGEWAYS	ROOMS AND ENCLOSED SPACES
S	B	C
U	NO RESTRICTIONS	NO RESTRICTIONS

CHAPTER 10 MEANS OF EGRESS
SECTION 1005 MEANS OF EGRESS SIZING
0.2 INCH PER OCCUPANT AT OTHER EGRESS COMPONENTS

TABLE 1017.2 EXIT ACCESS TRAVEL DISTANCE

OCCUPANCY	WITHOUT SPRINKLER SYSTEM
S-1	200 FEET
U	300 FEET

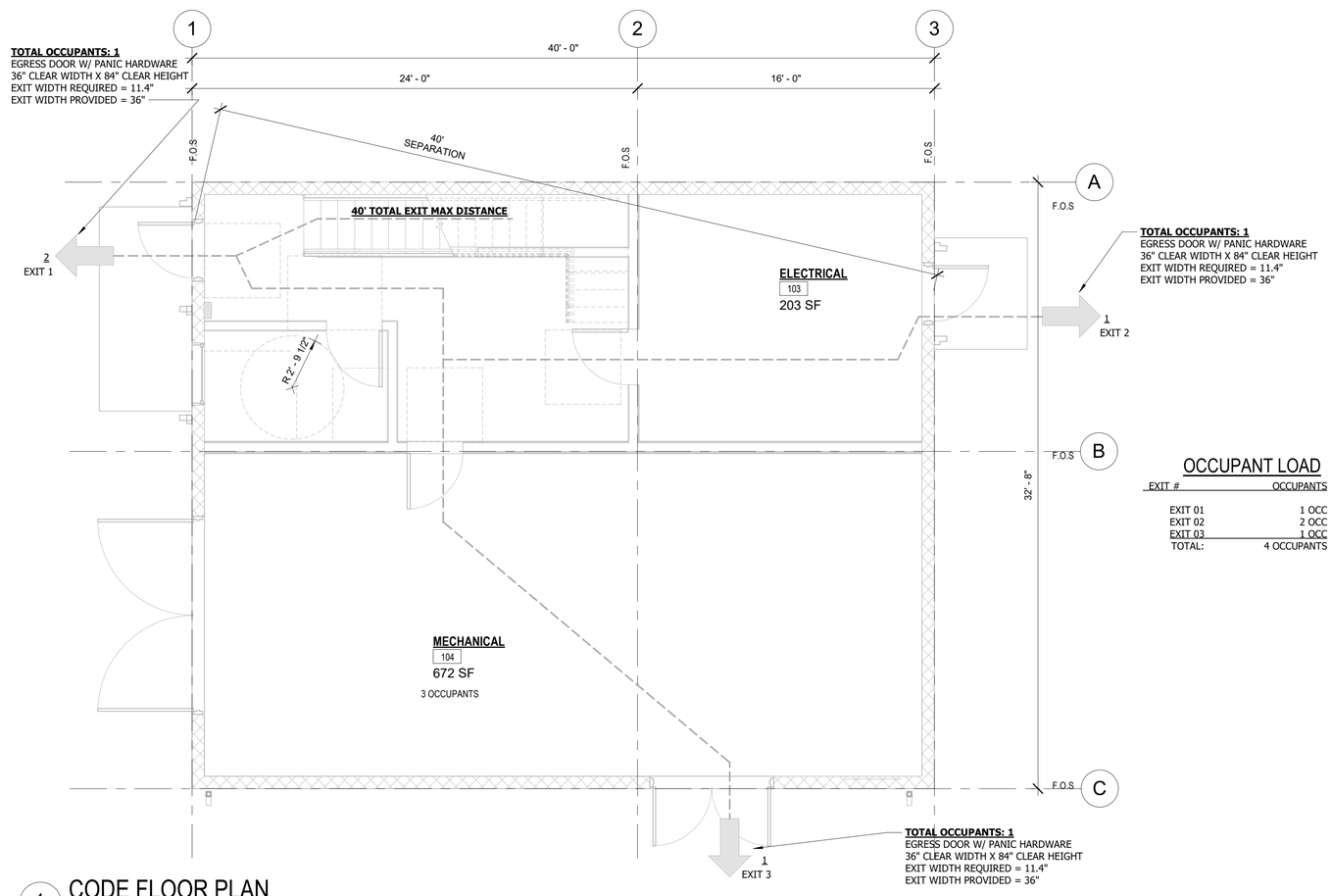

1 CODE FLOOR PLAN
1/4" = 1'-0"

OCCUPANT LOAD

EXIT #	OCCUPANTS
EXIT 01	1 OCC
EXIT 02	2 OCC
EXIT 03	1 OCC
TOTAL:	4 OCCUPANTS

CODE FLOOR PLAN LEGEND

123 LF TOTAL EXIT T.D.	DENOTES MAXIMUM EXIT TRAVEL DISTANCE
ROOM NAME 101 150 SF	ROOM TAG
00 OCC.	OCCUPANT LOAD
FEC	RECESSED FIRE EXTINGUISHER CABINET
	CODE REQUIRED SIGNAGE, AS NOTED ON PLAN

BID SET

Call 811 two business days before you dig

SHEET 206 OF 226

CAD NO.

10-04-2021		DATE
		APP.
		INT.
PERMIT COMMENTS - 1	11/20/2024	REVISIONS
Permit Revisions		
1		NO.

ACTION	BY	DATE
DESIGNED		01/03/2025
DRAWN		01/03/2025
CHECKED (FIELD)		
CHECKED (HDQTS.)		

10347 REGISTERED ARCHITECT
JAMES HILL
STATE OF WASHINGTON

REGISTERED STAMP

WASHINGTON STATE PARKS AND RECREATION COMMISSION

NISQUALLY STATE PARK

PHASE 3A MAINTENANCE BUILDING AND WWTF

WWTF - GENERAL CODE INFORMATION

GI-201

SCALE
AS SHOWN

PARKS FILE#

AIR BARRIER FLOOR PLAN NOTES

1. SEAL ALL HOLES AND GAPS IN AIR BARRIER SYSTEM TO PROVIDE AN AIRTIGHT INSTALLATION.
2. THE CONCRETE SLAB, SLAB ON GRADE IS ASSUMED TO PROVIDE ADEQUATE AIR BARRIER PERFORMANCE. (SEAL ALL PENETRATIONS)
3. REFER TO DOOR, WINDOW AND LOUVER DETAILS FOR ADDITIONAL AIR BARRIER SYSTEM AND WEATHER RESISTANT BARRIER DETAILS.
4. ENSURE THAT ALL AIR BARRIER SYSTEMS ARE SEALED TIGHT TO EACH OTHER AT ALL TRANSITIONS, FENESTRATION OPENINGS AND JOINTS.

INSULATION VALUES:
SEMI-HEATED SPACE - INSULATION NOT REQUIRED:

1. EXTERIOR WALLS: R-21 @ FRAMED EXTERIOR WALL @ UPPER WOOD STUD WALL
2. NEW ROOF: R-38 @ CONT. RIGID INSULATION ABOVE DECK
3. SLAB PERIMETER: R-10 @ SLABS & FOR 24 INCHES BEYOND

AIR BARRIER FLOOR PLAN LEGEND

EXTENTS OF CONTINUOUS AIR BARRIER SYSTEM

FENESTRATION CALCULATION

BUILDING	
TOTAL VERTICAL FENESTRATION	733 SF
GROSS EXTERIOR WALL AREA (ABOVE GRADE)	3,747 SF
PERCENT VERTICAL FENESTRATION	19%

WSEC- AIR BARRIER CODE

C402.5.1.1 AIR BARRIER CONSTRUCTION. THE CONTINUOUS AIR BARRIER SHALL BE CONSTRUCTED TO COMPLY WITH THE FOLLOWING:

1. THE AIR BARRIER SHALL BE CONTINUOUS FOR ALL ASSEMBLIES THAT ARE THE THERMAL ENVELOPE OF THE BUILDING AND ACROSS THE JOINTS AND ASSEMBLIES.
2. AIR BARRIER JOINTS AND SEAMS SHALL BE SEALED, INCLUDING SEALING TRANSITIONS IN PLACES AND CHANGES IN MATERIALS. THE JOINTS AND SEALS SHALL BE SECURELY INSTALLED IN OR ON THE JOINT FOR ITS ENTIRE LENGTH SO AS NOT TO DISLODGE, LOOSEN OR OTHERWISE IMPAIR ITS ABILITY TO RESIST POSITIVE AND NEGATIVE PRESSURE FROM WIND, STACK EFFECT AND MECHANICAL VENTILATION.
3. PENETRATIONS OF THE AIR BARRIER SHALL BE CAULKED, GASKETED OR OTHERWISE SEALED IN A MANNER COMPATIBLE WITH THE CONSTRUCTION MATERIALS AND LOCATION. JOINTS AND SEALS ASSOCIATED WITH PENETRATIONS SHALL BE SEALED IN THE SAME MANNER OR TAPED OR COVERED WITH MOISTURE VAPOR-PERMEABLE WRAPPING MATERIAL. SEALING MATERIALS SHALL BE APPROPRIATE TO THE CONSTRUCTION MATERIALS BEING SEALED AND SHALL BE SECURELY INSTALLED AROUND THE PENETRATIONS SO AS NOT TO DISLODGE, LOOSEN OR OTHERWISE IMPAIR THE PENETRATIONS' ABILITY TO RESIST POSITIVE AND NEGATIVE PRESSURE FROM WIND, STACK EFFECT, AND MECHANICAL VENTILATION. SEALING OF CONCEALED FIRE SPRINKLERS, WHERE REQUIRED, SHALL BE IN A MANNER THAT IS RECOMMENDED BY THE MANUFACTURER. CAULKING OR OTHER ADHESIVE SEALANTS SHALL NOT BE USED TO FILL VOIDS BETWEEN FIRE SPRINKLER COVER PLATES AND WALLS OR CEILINGS.
4. RECESSED LIGHTING FIXTURES SHALL COMPLY WITH SECTION C402.5.8. WHERE SIMILAR OBJECTS ARE INSTALLED WHICH PENETRATE THE AIR BARRIER, PROVISIONS SHALL BE MADE TO MAINTAIN THE INTEGRITY OF THE AIR BARRIER.
5. CONSTRUCTION DOCUMENTS SHALL CONTAIN A DIAGRAM SHOWING THE BUILDING'S PRESSURE BOUNDARY IN PLAN(S) AND SECTION(S) AND A CALCULATION OF THE AREA OF THE PRESSURE BOUNDARY TO BE CONSIDERED IN THE TEST.

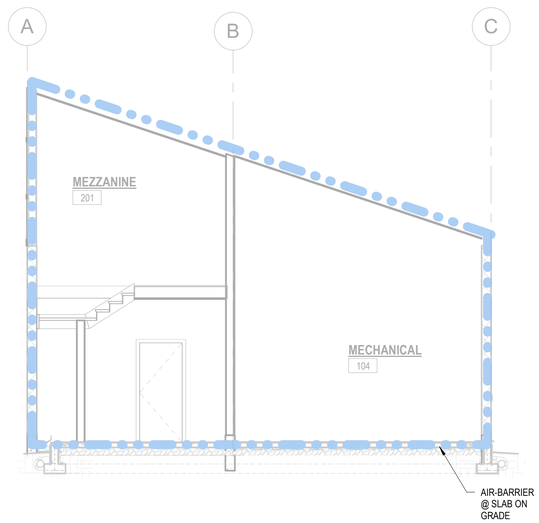

2 TRANSVERSE AIR BARRER BUILDING SECTION
3/16" = 1'-0"

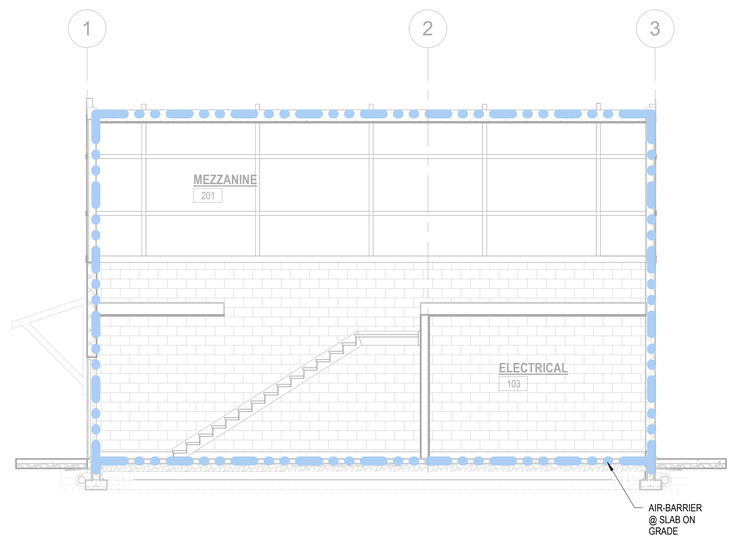

1 LONGITUDINAL AIR BARRER BUILDING SECTION
3/16" = 1'-0"

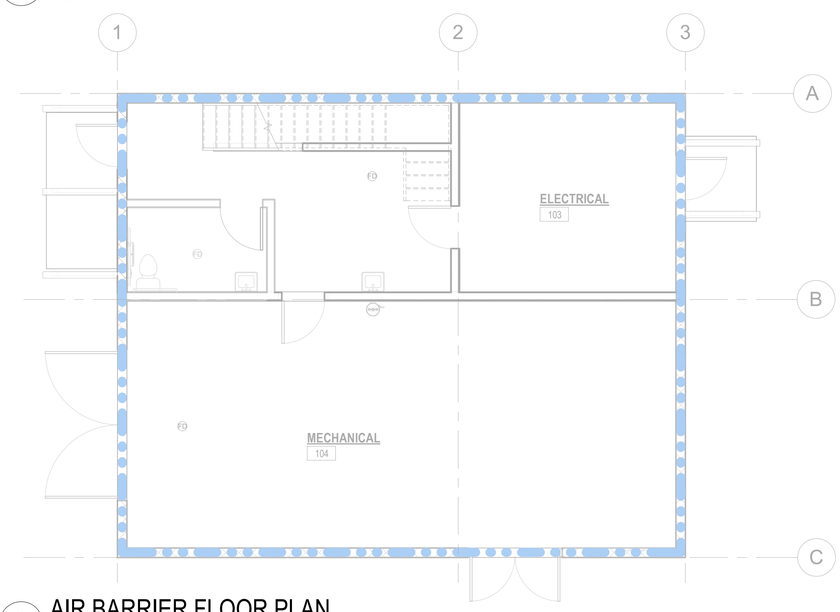

3 AIR BARRIER FLOOR PLAN
3/16" = 1'-0"

BID SET

Call 811 two business days before you dig

SHEET 207 OF 226

CAD NO.

NO.	REVISIONS	INT.	APP.	DATE
				10-04-2021

ACTION	BY	DATE
DESIGNED		01/03/2025
DRAWN		01/03/2025
CHECKED (FIELD)		
CHECKED (HDQTS.)		

10347 REGISTERED ARCHITECT
JAMES HILL
STATE OF WASHINGTON

REGISTERED STAMP

WASHINGTON STATE PARKS AND RECREATION COMMISSION

NISQUALLY STATE PARK

PHASE 3A MAINTENANCE BUILDING AND WWTF

WWTF - AIR BARRIER

GI-301

SCALE
AS SHOWN

PARKS FILE#

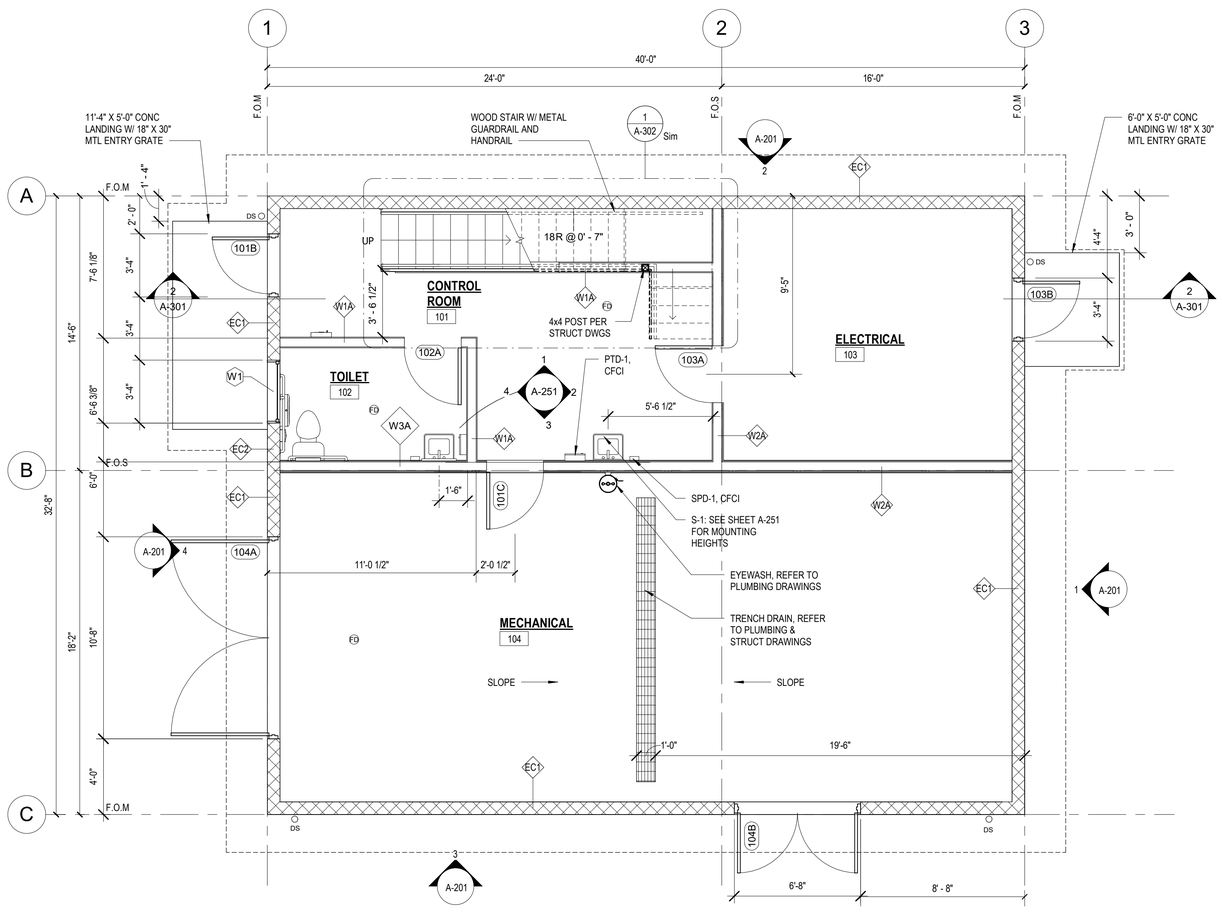

1 OVERALL FLOOR PLAN

1/4" = 1'-0"

PROJECT NORTH

GENERAL FLOOR PLAN NOTES

1. REFER TO SLAB PLANS FOR RECESS CONCRETE LOCATIONS TO PROVIDE FLOOR SLOPES.
2. FOR WALL TYPES, FLOOR AND ROOF TYPES. REFER TO A-500 SERIES. UNLESS OTHERWISE NOTED. FINISHES PER SCHEDULE.
3. FOR DOOR & WINDOW TYPES AND FINISH SCHEDULE, REFER TO A-600 SERIES.
4. FOR CABINET DETAILS, EQUIPMENT LAYOUT, MOUNTING HEIGHTS, REFER TO DETAIL SHEETS.
5. FLOOR DRAINS - SET FLOOR DRAINS (FD) 1" BELOW FF @ ALL AREAS.
6. FOR PLUMBING FIXTURES REFER TO MECHANICAL DRAWINGS.
7. FIELD CONFIRM ALL DIMENSIONS AND REPORT DISCREPANCIES IF ANY, TO ARCHITECT PRIOR TO CONSTRUCTION.
8. REFER TO STRUCTURAL, MECHANICAL, AND ELECTRICAL DRAWINGS FOR ADDITIONAL DIMENSION REQUIREMENTS.
9. DIMENSIONS SHOWN ARE TO FACE OF WALL STUDS, CENTERLINE OF OPENING (U.N.O.) AND ROUGH OPENING.
10. ALL DOORS NOT DIMENSIONED ARE LOCATED AT 4 1/2" TO AN INTERSECTING WALL FACE OF FINISH OR CENTERED ON WALL (REFER TO PLAN).

FLOOR PLAN LEGEND

WOOD STUD WALL

CMU WALL

LINE OF ROOF OVERHANG ABOVE, TYP.

DOOR, REFER TO DOOR SCHEDULE

BID SET

Call 811 two business days before you dig

SHEET 208 OF 226

CAD NO.

NO.	REVISIONS	INT.	APP.	DATE
				10-04-2021

ACTION	BY	DATE
DESIGNED		01/03/2025
DRAWN		01/03/2025
CHECKED (FIELD)		
CHECKED (HDQTS.)		

10347 REGISTERED ARCHITECT JAMES HILL STATE OF WASHINGTON

REGISTERED STAMP

WASHINGTON STATE PARKS AND RECREATION COMMISSION

NISQUALLY STATE PARK

PHASE 3A MAINTENANCE BUILDING AND WWTF

WWTF - OVERALL FLOOR PLAN - LEVEL 1

A-101

SCALE

AS SHOWN

PARKS FILE#

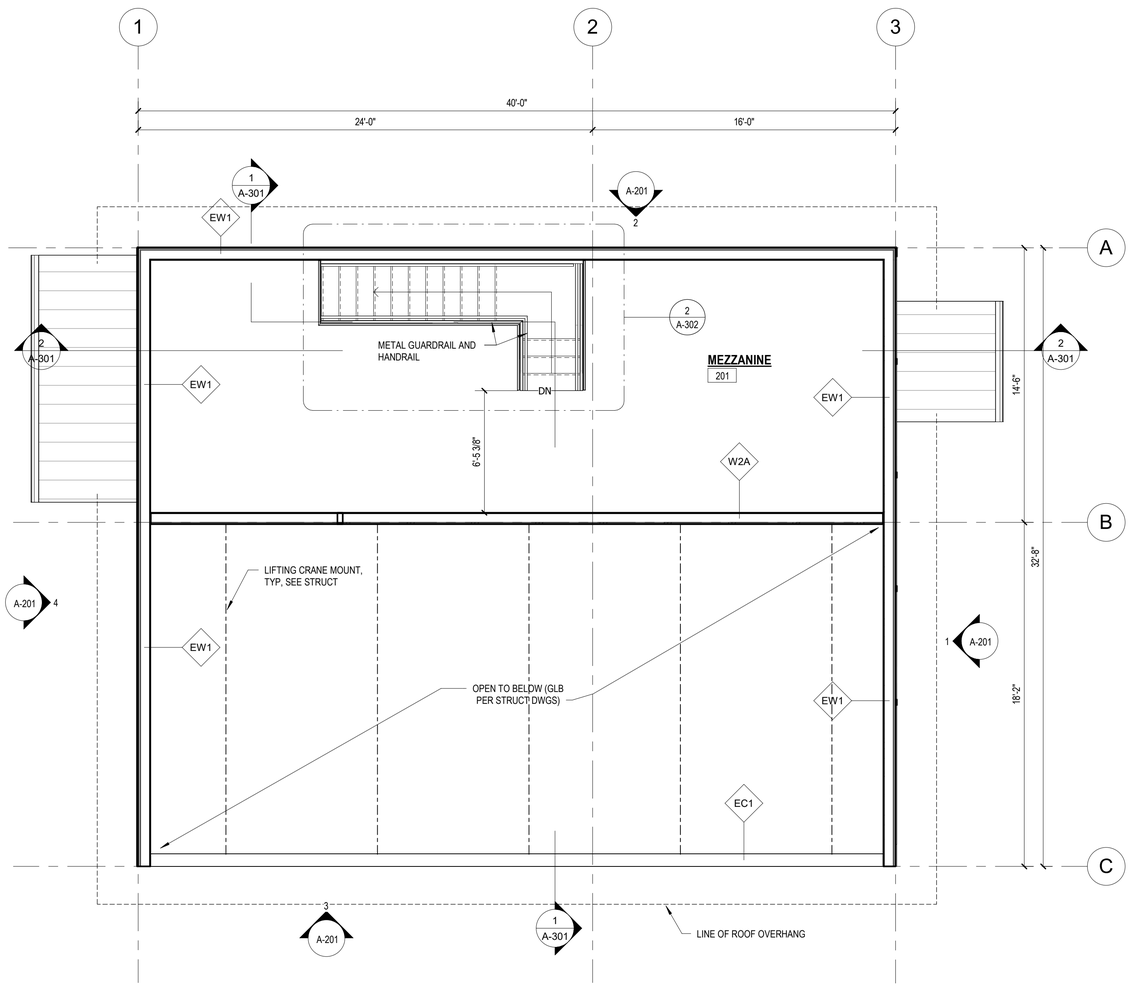

1 REFERENCE MEZZANINE FLOOR PLAN
1/4" = 1'-0"

PROJECT NORTH

FLOOR PLAN LEGEND

WOOD STUD WALL

CMU WALL

LINE OF ROOF OVERHANG ABOVE, TYP.

DOOR, REFER TO DOOR SCHEDULE

BID SET

Call 811 two business days before you dig

SHEET 209 OF 226

CAD NO.

NO.	REVISIONS	INT.	APP.	DATE
				10-04-2021

ACTION	BY	DATE
DESIGNED		01/03/2025
DRAWN		01/03/2025
CHECKED (FIELD)		
CHECKED (HDQTS.)		

10347 REGISTERED ARCHITECT
JAMES HILL
STATE OF WASHINGTON

REGISTERED STAMP

WASHINGTON STATE PARKS AND RECREATION COMMISSION

NISQUALLY STATE PARK

PHASE 3A MAINTENANCE BUILDING AND WWTF

WWTF -OVERALL FLOOR PLAN - LEVEL 2

A-102

SCALE
AS SHOWN

PARKS FILE#

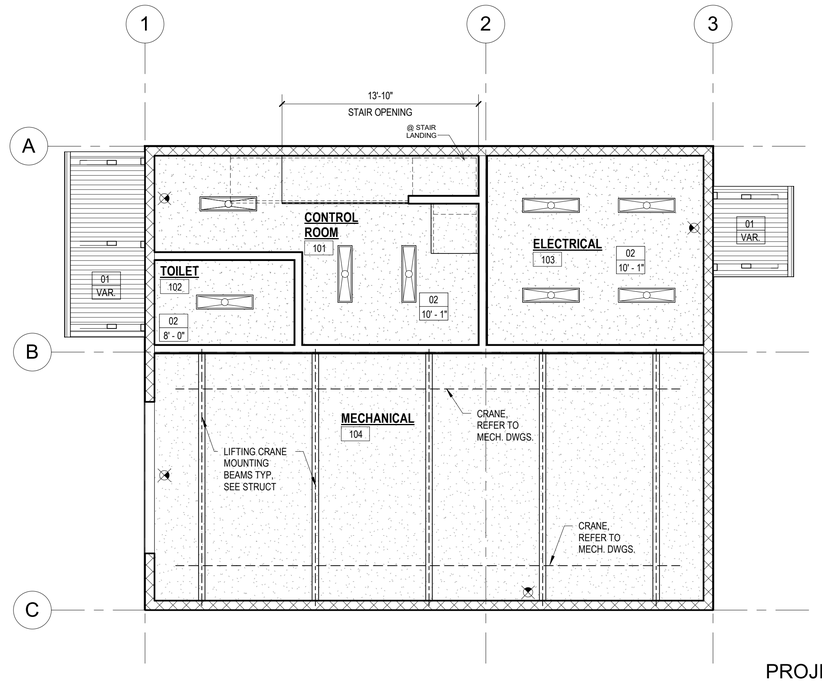

PROJECT NORTH

1 REFLECTED PLAN - 1ST FLOOR

3/16" = 1'-0"

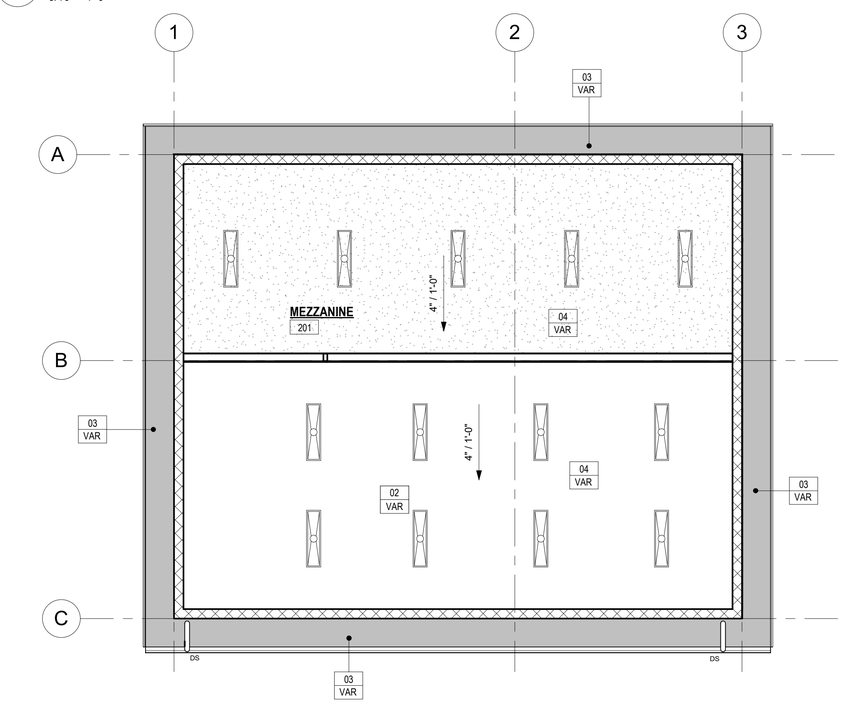

PROJECT NORTH

2 REFLECTED CEILING PLAN - 2ND FLOOR

3/16" = 1'-0"

REFLECTED CEILING PLAN NOTES

1. THESE GENERAL NOTES APPLY TO ALL REFLECTED CEILING PLANS.
2. CEILING HEIGHTS ARE FROM FINISH FLOOR UNO.
3. TYPICAL CEILING HEIGHT TO BE 9' - 0", UNO.
4. ALIGN SOFFITS WITH FACE OF ADJACENT WALL, UNO
5. NOT ALL LIGHTING, INCLUDING PENDANT AND WALL MOUNTED LIGHT FIXTURES, SHOWN. SEE ELECTRICAL.
6. OTS = OPEN TO STRUCTURE. PAINT ALL EXPOSED CEILING/ROOF STRUCTURE, UNO.
7. U.N.O. - PAINT ALL GWB CEILINGS & SOFFITS PT-1 (SEE FINISH SCHEDULE)
8. SEE DETAIL FOR TYP CEILING DETAIL.
9. INTERIOR WALLS ARE TYPICALLY 6" ABOVE CEILING HEIGHT SHOWN UNLESS NOTED OTHERWISE ON ARCHITECTURAL OR STRUCTURAL DRAWINGS (i.e. SHEAR WALLS, SMOKE BARRIER WALLS, SOUND BARRIER WALLS, MECHANICAL ZONE WALLS).
10. COORDINATE LOCATION OF CEILING ACCESS DOORS WITH MECHANICAL & ELECTRICAL CONTRACTORS.
11. PROVIDE ADDITIONAL EDGE BLOCKING, CROSS BRACING & SUSPENDED SUPPORT WIRES OR ADDITIONAL FURRING FOR CEILING MOUNTED ITEMS (LIGHTING, ACCESS PANELS, GRILLES, CAMERAS, ETC.)

FLAG NOTES TO REFLECTED CEILING PLAN:

1 FULL HEIGHT WALL UP TO BOTTOM OF METAL DECKING AT ROOF ABOVE.

2 LOCATION OF EXTERIOR WALL ABOVE, BETWEEN LOWER AND UPPER ROOFS.

CEILING TYPES:

CEILING TYPES: **XX**
TYPE
HEIGHT **X' - X"**

01 SEALED T & G EXPOSED SOFFIT - SIZE TO BE 2x6

02 GWB OVER STUD FRAMING

03 FIBER CEMENT VENTED SOFFIT OVER STUD FRAMING

04 OPEN TO STRUCTURE

Call 811 two business days before you dig

SHEET 210 OF 226

BID SET

CAD NO.

NO.	REVISIONS	INT.	APP.	DATE
				10-04-2021

ACTION	BY	DATE
DESIGNED		01/03/2025
DRAWN		01/03/2025
CHECKED (FIELD)		
CHECKED (HDQTS.)		

10347 REGISTERED ARCHITECT JAMES HILL STATE OF WASHINGTON

REGISTERED STAMP

WASHINGTON STATE PARKS AND RECREATION COMMISSION

NISQUALLY STATE PARK

PHASE 3A MAINTENANCE BUILDING AND WWTF

WWTF - REFERENCE REFLECTED CEILING PLANS A-151

SCALE

AS SHOWN

PARKS FILE#

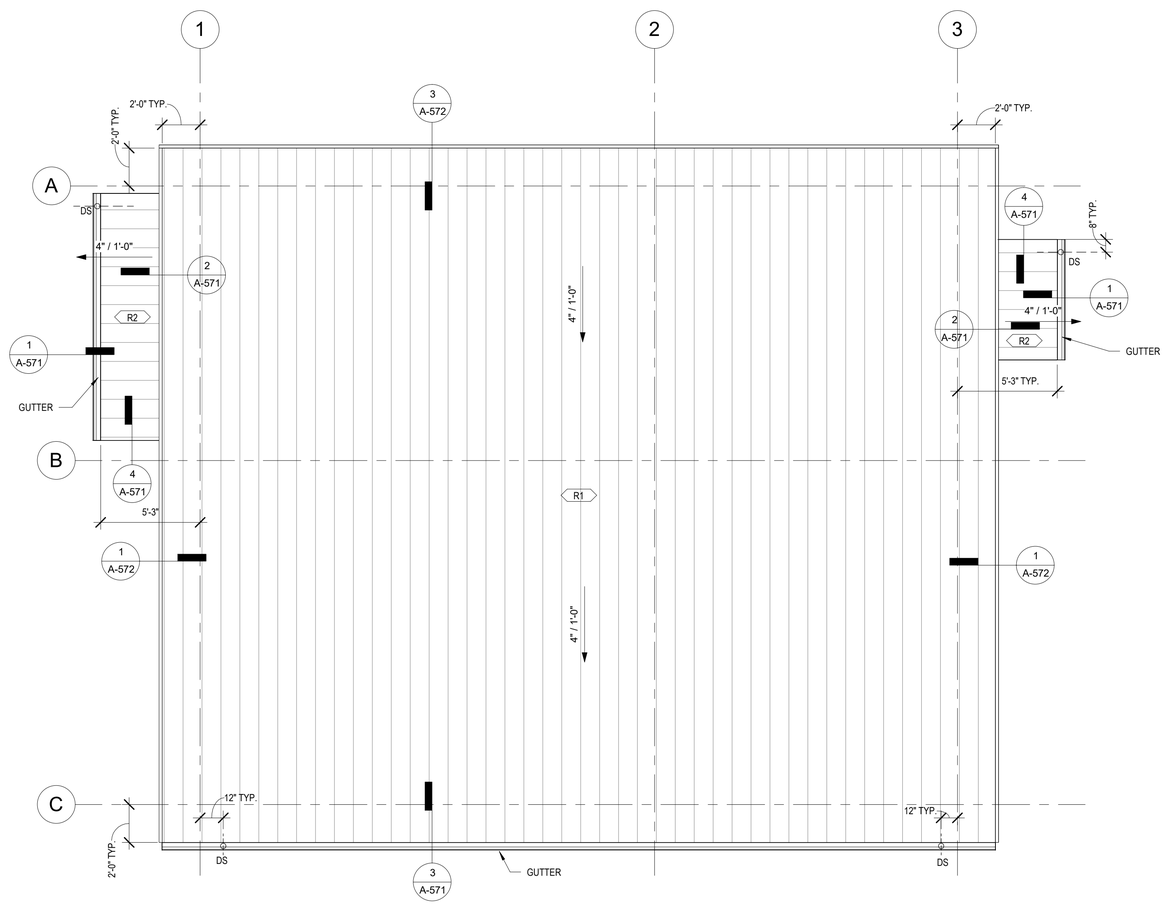

1 ROOF PLAN
1/4" = 1'-0"

PROJECT NORTH

ROOF PLAN LEGEND

DS	DOWNSPOUT
SLOPE	SLOPE= 1/4" MINIMUM (DEPTH VARIES): COORDINATE WITH ROOF DETAILS
R-1	ROOF TYPE. SEE SHEET A-501

ROOF PLAN GENERAL NOTES

1. ROOF TYPES ARE DESCRIBED ON SHEET A-501. TYPICAL DETAILS ARE FOUND ON SHEET A-571
2. COORDINATE PENETRATIONS w/ MECHANICAL.
3. FIELD VERIFY ALL DIMENSIONS.
4. FABRICATE FLASHING FROM SPECIFIED SHEET METAL PRODUCTS. HEM ALL EXPOSED EDGES 1/2". DO NOT INSTALL FASTENERS WITHIN MOVING LAPS.
5. INSTALL IN ACCORDANCE WITH LOCAL BUILDING CODES, SPECIFICATIONS AND DETAILS, AND MANUFACTURER'S INSTALLATION REQUIREMENTS, WHICHEVER ARE MORE STRINGENT.
6. COUNTER FLASHINGS SHALL EXTEND OVER BASE FLASHINGS A MINIMUM OF 4".
7. TWO BEADS OF POLYURETHANE SEALANT SHALL BE CONCEALED WITHIN ALL MOVING LAPS (BOTH HORIZONTAL AND VERTICAL LAP LEGS).
8. INSTALL FLASHING & COUNTERFLASHING @ BASEWALL CONDITIONS SUCH THAT THEY CAN BE REMOVED & RE-INSTALLED AT THE TIME OF FUTURE RE-ROOF.
9. NEOPRENE WASHERED GASKET SCREWS (NWGS) TO BE USED IN ALL EXPOSED CONDITIONS.
10. SHEET METAL FLASHING SHALL BE LAPPED SLOPE-SENSITIVE.
11. SHEET METAL FASTENERS SHALL BE INSTALLED AT NO GREATER THAN 24" O.C.
12. INSULATION TO BE INSTALLED IN ACCORDANCE WITH ASCE-7 (CURRENT EDITION) WITH INCREASED FASTENING AT CORNERS AND PERIMETERS.
13. MAINTAIN MINIMUM SLOPE OF 1/2":12 AT ALL CRICKETS.

BID SET

Call 811 two business days before you dig

SHEET 211 OF 226

CAD NO.

NO.	REVISIONS	INT.	APP.	DATE
				10-04-2021

ACTION	BY	DATE
DESIGNED		01/03/2025
DRAWN		01/03/2025
CHECKED (FIELD)		
CHECKED (HDQTS.)		

10347 REGISTERED ARCHITECT
JAMES HILL
STATE OF WASHINGTON

REGISTERED STAMP

WASHINGTON STATE PARKS AND RECREATION COMMISSION

NISQUALLY STATE PARK

PHASE 3A MAINTENANCE BUILDING AND WWTF

WWTF - REFERENCE ROOF PLAN

A-161

SCALE
AS SHOWN

PARKS FILE#

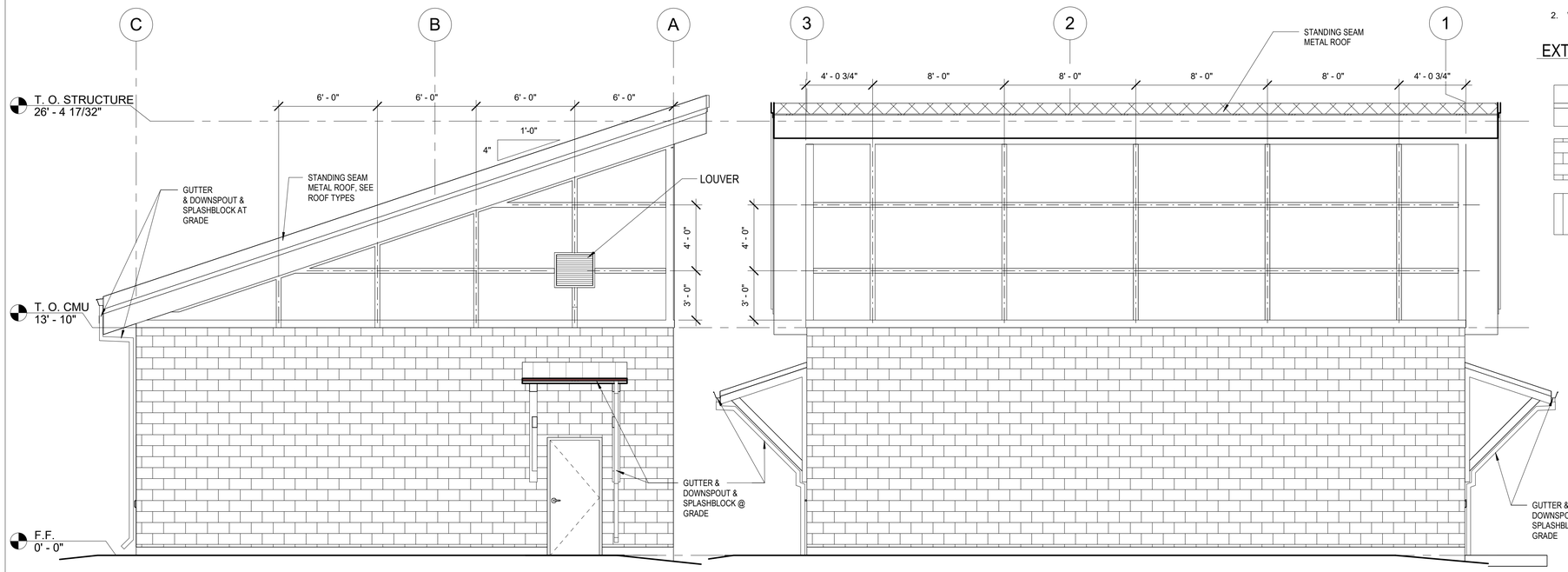

1 EAST EXTERIOR ELEVATION
1/4" = 1'-0"

2 NORTH EXTERIOR ELEVATION
1/4" = 1'-0"

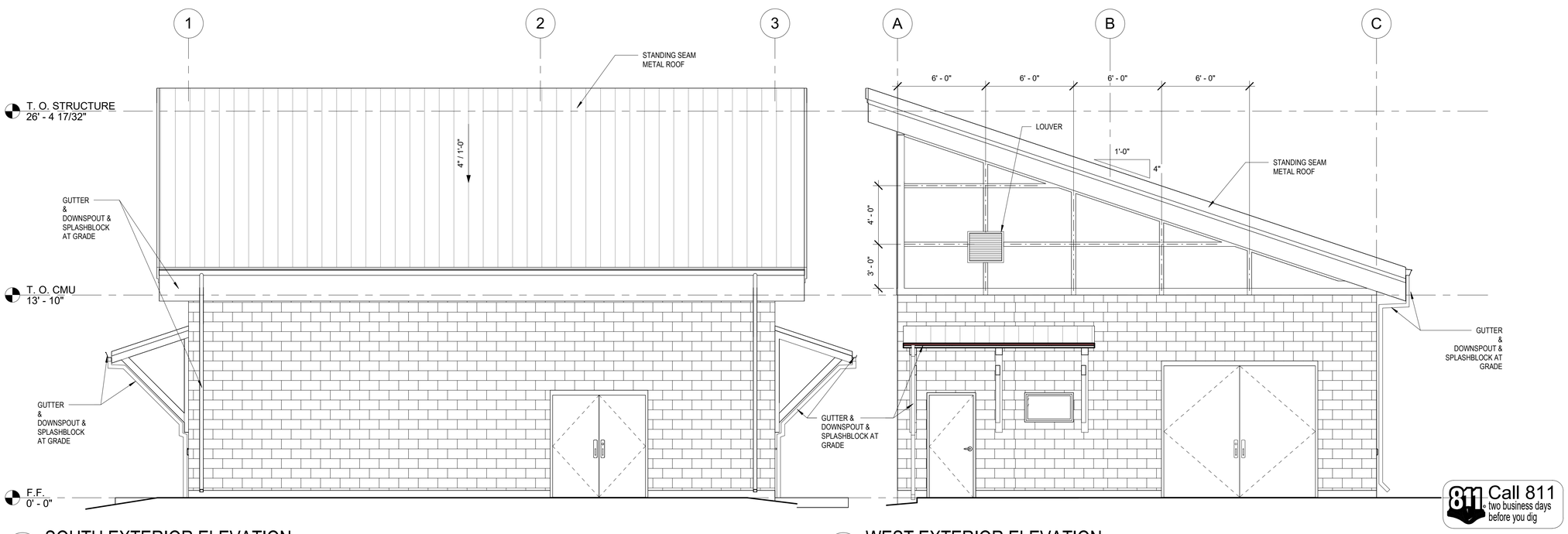

3 SOUTH EXTERIOR ELEVATION
1/4" = 1'-0"

4 WEST EXTERIOR ELEVATION
1/4" = 1'-0"

EXTERIOR ELEVATION NOTES

1. ALL SHEET METAL AND MISC. METAL TO BE PRE-PAINTED. DO NOT PAINT STAINLESS STEEL.
2. WINDOW AND DOOR TRIM TO BE PAINTED .

EXTERIOR ELEVATION LEGEND

BOARD & BATTEN SIDING OVER RAINSCREEN- PAINT

CMU-1: CONCRETE MASONRY UNIT (SEALED)

SSMR-1: STANDING SEAM METAL ROOF - SEE GENERAL ROOF PLAN NOTES (COLONIAL RED)

EXT. ELEVATION FINISH LEGEND

ROOF:
METAL ROOF SYSTEM
COLONIAL RED

EXTERIOR WALLS (WOOD STUD WALL):
SHERWIN WILLIAMS
GRAYS HARBOR
COLOR #6236

EXTERIOR TRIM (WOOD STUD WALL):
SHERWIN WILLIAMS
DARK NIGHT
COLOR #6237

DOORS:
SHERWIN WILLIAMS
PROTEGE BRONZE
COLOR #6153

BID SET

Call 811 two business days before you dig

SHEET 212 OF 226

CAD NO.

REVISIONS NO.	DATE	APP.	INT.
	10-04-2021		

ACTION	BY	DATE
DESIGNED		01/03/2025
DRAWN		01/03/2025
CHECKED (FIELD)		
CHECKED (HDQTS.)		

10347 REGISTERED ARCHITECT
JAMES HILL
STATE OF WASHINGTON

REGISTERED STAMP

WASHINGTON STATE PARKS AND RECREATION COMMISSION

NISQUALLY STATE PARK

PHASE 3A MAINTENANCE BUILDING AND WWTF

WWTF - EXTERIOR ELEVATIONS

A-201

SCALE
AS SHOWN

PARKS FILE#

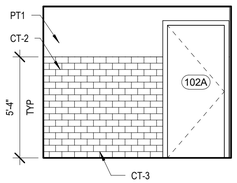

1 TOILET - EAST
1/4" = 1'-0"

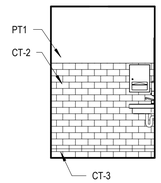

2 TOILET - SOUTH
1/4" = 1'-0"

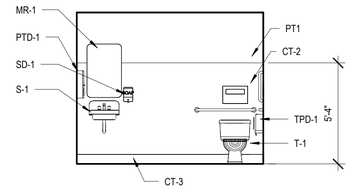

3 TOILET - WEST
1/4" = 1'-0"

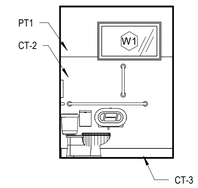

4 TOILET - NORTH
1/4" = 1'-0"

INTERIOR ELEVATION GENERAL NOTES

- REFER TO NEW FLOOR PLAN AND EQUIPMENT LEGEND. PROVIDE BACKING AS REQUIRED AND COORDINATE FINAL LOCATION WITH OWNER PRIOR TO COVER.
- DIMENSIONS FOR MOUNTING HEIGHTS ARE TO CENTER OF BOX AND TYPICAL (UNO).
- ALL CONDITIONS ILLUSTRATED ARE TYPICAL (UNO).
- ALL SHELVES AND DIVIDERS ARE ADJUSTABLE, UNLESS NOTED OTHERWISE.
- FIELD VERIFY DIMENSIONS OF ALL FABRICATION. CONTACT ARCHITECT IF ANY DISCREPANCIES ARE FOUND BETWEEN DRAWINGS AND FIELD CONDITIONS
- ALL EXPOSED PLUMBING TO BE INSULATED
- REFER TO NEW FLOOR PLAN FOR ALL EMERGENCY POWER DESIGNATIONS
- REFER TO NEW FLOOR PLAN AND EQUIPMENT SCHEDULE FOR SPECIFIC REQUIREMENTS, SYSTEMS AND FINISHES. NOT ALL EQUIPMENT IS SHOWN IN ELEVATIONS.

- SEE A-251 FOR TYPICAL MOUNTING HEIGHTS
- SEE A-501 FOR INTERIOR WALL TYPES
- SEE A-601 FOR DOOR TYPES

ACCESSORIES ABBREVIATION LEGEND

**REFER TO A-701 ACCESSORIES & EQUIPMENT LEGEND FOR PRODUCT INFORMATION

ABBREV	DESCRIPTION
GB-1	GRAB BAR (SIDE WALL) - WALL MOUNTED, CFCI
GB-2	GRAB BAR (BACK WALL) - WALL MOUNTED, CFCI
GB-3	GRAB BAR (SIDE WALL, VERTICAL) - WALL MOUNTED, CFCI
MR-1	MIRROR - WALL MOUNTED, CFCI
PLAM-1	PLASTIC LAMINATE WAINSCOTTING
PTD-1	PAPER TOWEL DISPENSER - WALL MOUNTED, CFCI
RWS-1	ROLLER WINDOW SHADE- WALL MOUNTED, CFCI
RB-1	4" HIGH RUBBER BASE
RB	6" HIGH RUBBER BASE
SD-1	SOAP DISPENSER - WALL MOUNTED, CFCI
S-1	SINK- WALL MOUNTED, CFCI
SND-1	SANITARY NAPKIN HOLDER - WALL MOUNTED, CFCI
T-1	FLOOR MOUNTED TOILET - WALL MOUNTED, CFCI
TPD-1	TOILET PAPER DISPENSER - WALL MOUNTED, OFCI
TSCD-1	TOILET SEAT COVER DISPENSER - WALL MOUNTED, CFCI
WP-1	WALL PROTECTION - PLASTIC LAMINATE, CFCI

TYPICAL MOUNTING HEIGHTS

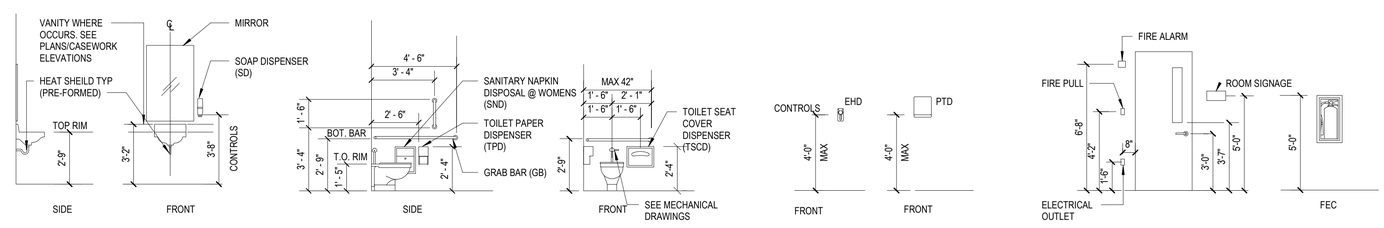

Call 811 two business days before you dig

SHEET 213 OF 226

BID SET

CAD NO.

NO.	REVISIONS	INT.	APP.	DATE
				10-04-2021

ACTION	BY	DATE
DESIGNED		01/03/2025
DRAWN		01/03/2025
CHECKED (FIELD)		
CHECKED (HDQTS.)		

10347 REGISTERED ARCHITECT
JAMES HILL
STATE OF WASHINGTON

REGISTERED STAMP

WASHINGTON STATE PARKS AND RECREATION COMMISSION

NISQUALLY STATE PARK

PHASE 3A MAINTENANCE BUILDING AND WWTF

WWTF - INTERIOR ELEVATIONS

A-251

SCALE
AS SHOWN

PARKS FILE#

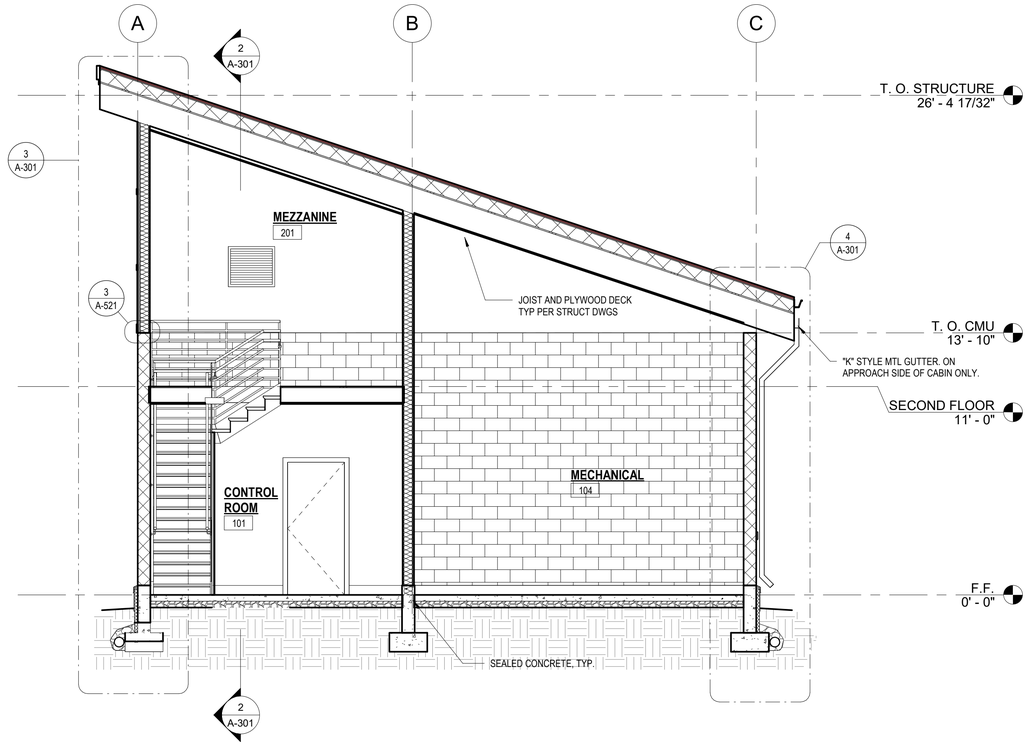

1 TRANSVERSE BUILDING SECTION
1/4" = 1'-0"

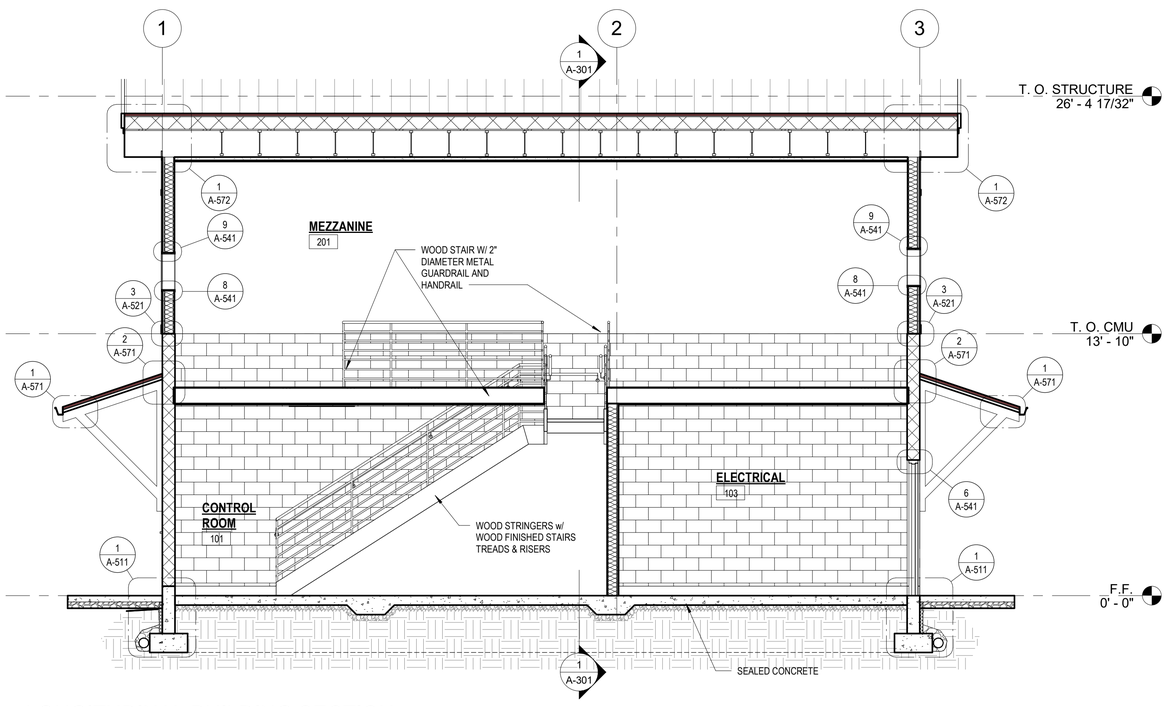

2 LONGITUDINAL BUILDING SECTION
1/4" = 1'-0"

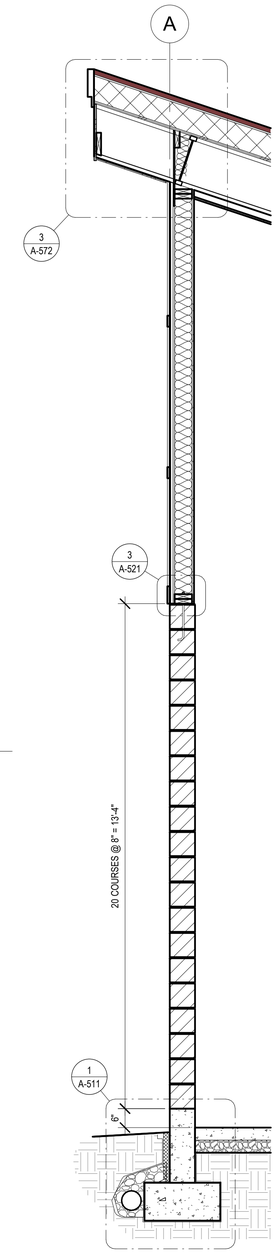

3 WALL SECTION - 2
1/2" = 1'-0"

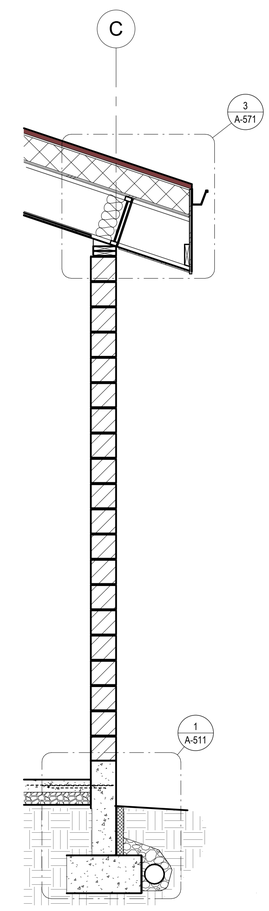

4 WALL SECTION - 1
1/2" = 1'-0"

BID SET

Call 811 two business days before you dig

SHEET 214 OF 226

CAD NO.

NO.	REVISIONS	INT.	APP.	DATE
1	Permit Revisions			10-04-2021

ACTION	BY	DATE
DESIGNED		01/03/2025
DRAWN		01/03/2025
CHECKED (FIELD)		
CHECKED (HDQTS.)		

10347 REGISTERED ARCHITECT
JAMES HILL
STATE OF WASHINGTON

REGISTERED STAMP

WASHINGTON STATE PARKS AND RECREATION COMMISSION

NISQUALLY STATE PARK

PHASE 3A MAINTENANCE BUILDING AND WWTF

WWTF - BUILDING SECTIONS

A-301

SCALE
AS SHOWN

PARKS FILE#

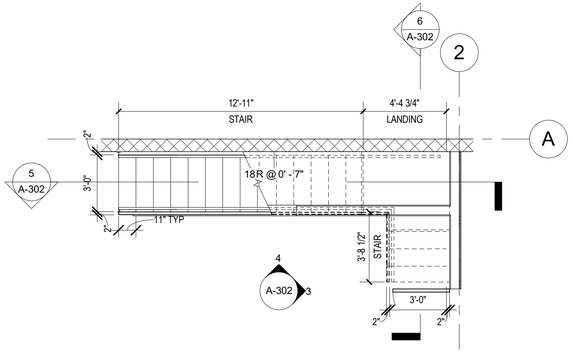

1 FIRST FLOOR - STAIRS
1/4" = 1'-0"

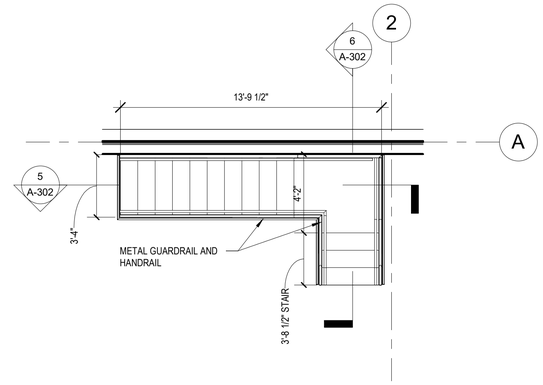

2 SECOND FLOOR - STAIRS
1/4" = 1'-0"

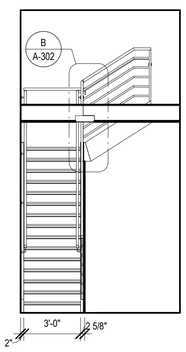

3 RAILING ELEV - SOUTH
1/4" = 1'-0"

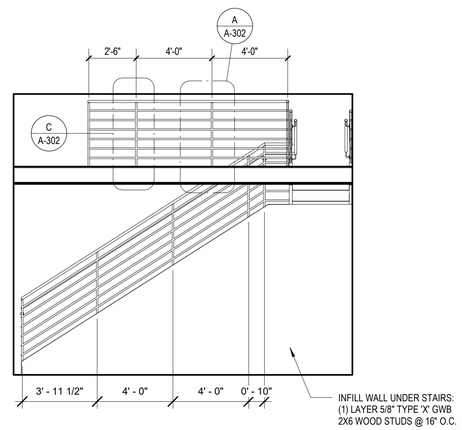

4 RAILING ELEV - EAST
1/4" = 1'-0"

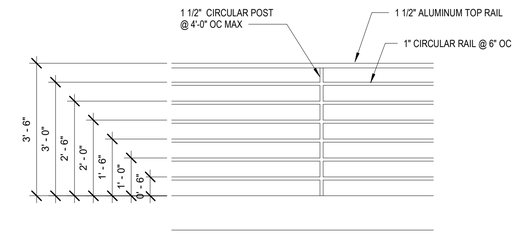

A RAILING PATTERN
1/2" = 1'-0"

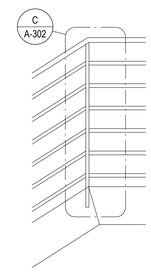

B RAILING PATTERN - STAIR
1/2" = 1'-0"

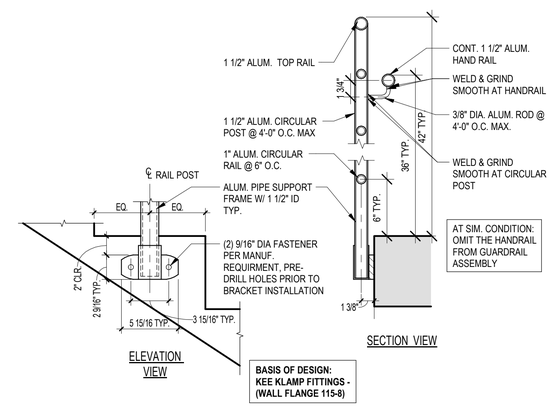

C TYP. GUARDRAIL @ STAIR
1 1/2" = 1'-0"

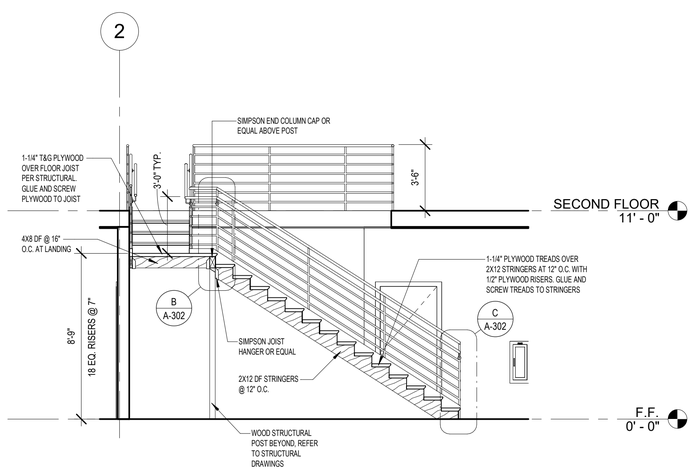

5 SECTION THRU STAIR
1/4" = 1'-0"

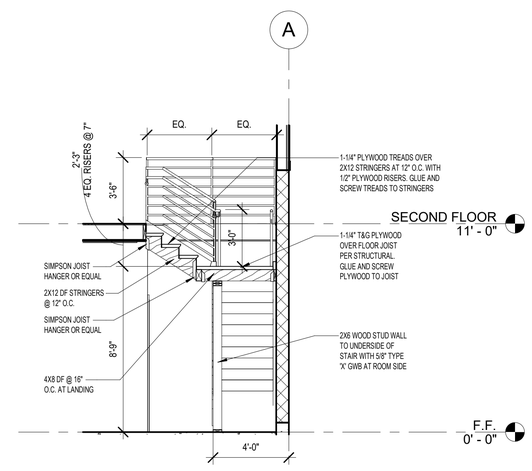

6 SECTION THRU UPPER STAIR LANDING
1/4" = 1'-0"

Call 811
two business days
before you dig

SHEET 215 OF 226

BID SET

CAD NO.

NO.	REVISIONS	INT.	APP.	DATE
				10-04-2021

ACTION	BY	DATE
DESIGNED		01/03/2025
DRAWN		01/03/2025
CHECKED (FIELD)		
CHECKED (HDQTS.)		

10347
REGISTERED ARCHITECT
JAMES HILL
STATE OF WASHINGTON

REGISTERED STAMP

WASHINGTON STATE PARKS AND RECREATION COMMISSION

NISQUALLY STATE PARK

PHASE 3A MAINTENANCE BUILDING AND WWTF

WWTF - VERTICAL CIRCULATION

A-302

SCALE
AS SHOWN

PARKS FILE#

EXTERIOR WALL TYPES

PER PLAN EC-

DESCRIPTION: EXTERIOR WALL CONCRETE MASONARY UNITS

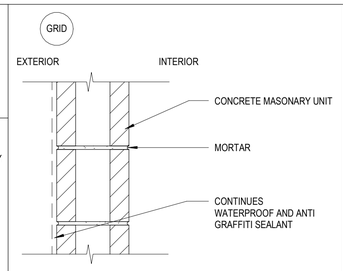

EC1 AS INDICATED ABOVE

PER PLAN EC-

DESCRIPTION: EXTERIOR WALL CONCRETE MASONARY UNITS

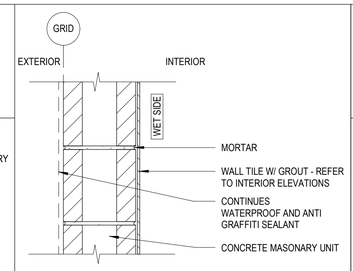

EC2 AS INDICATED ABOVE

PER PLAN EW-

DESCRIPTION: EXTERIOR WALL WITH WOOD STUD.

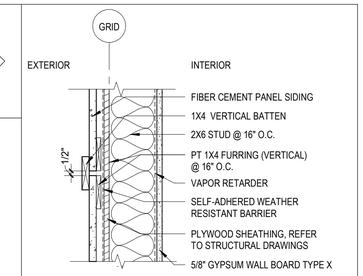

EW1 AS INDICATED ABOVE

INTERIOR WALL TYPES

PER PLAN W1-

DESCRIPTION: 2X6 STUD PARTITION WALL

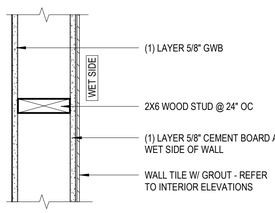

W1A 2X6 STUDS; W/O PLYWOOD SHEATHING

PER PLAN W2-

DESCRIPTION: 2X6 STUD PARTITION WALL

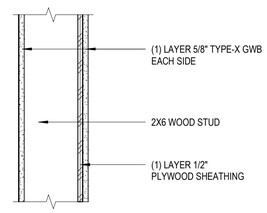

W2A AS INDICATED ABOVE

PER PLAN W3-

DESCRIPTION: 2X6 STUD PARTITION WALL

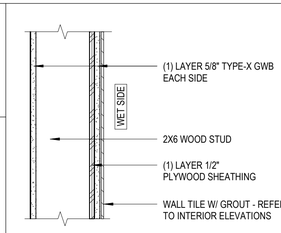

W3A AS INDICATED ABOVE

FLOOR TYPE

F1

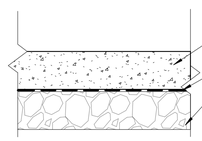

F1 AS INDICATED ABOVE

F2

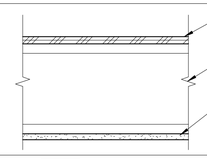

F2 AS INDICATED ABOVE

ROOF TYPE

R1

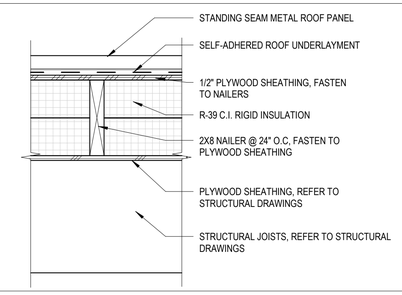

R1 AS INDICATED ABOVE

R2

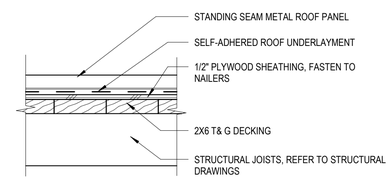

R2 AS INDICATED ABOVE

WALL TYPES NOTES

1. SUBSTITUTE BACKER BOARD FOR GWB AT TILE.
2. REFER TO FINISH SCHEDULE FOR WALL FINISH.
3. ALL ASSEMBLY TYPES ARE DRAWN IN SECTION UNLESS A UNIQUE CONDITION REQUIRES AN ADDITIONAL PLAN VIEW OF THE ASSEMBLY.
4. IN AN ASSYMMETRICAL WALL CONDITION, THE EXTRA LAYERS WILL OCUR ON THE SIDE OF THE WALL THE TAG IS LOCATED ON.
5. PROVIDE BACKING IN WALLS FOR CASEWORK, MESSAGE BOARDS, TOILET ACCESSORIES, OFOI FURNISHINGS AND ALL OTHER WALL SUPPORTED ITEMS. REFER TO INTERIOR ELEVATIONS AND PLANS FOR LOCATIONS.
6. PROVIDE BACKING AT ELECTRICAL AND COMMUNICATIONS ROOMS AS REQUIRED PER THE ELECTRICAL REQUIREMENTS.
7. TOP AND BOTTOM RUNNERS: ALIGN AND ANCHOR TO BUILDING STRUCTURAL MEMBERS AT EACH END AND AT 24" O.C.
8. WHERE METAL STUD DEFLECTION TRACKS ARE USED, PROVIDE AT TOP OF FULL WALL HEIGHT PARTITIONS TO ALLOW STRUCTURE TO DEFLECT WITHOUT IMPOSING LOADS ON WALL.
9. AT CEILING AND SOFFIT FRAMING:
   A. INSTILL FRAMING AT 16" O.C. AND CONNECT ENDS OF STUD TO HORIZONTAL RUNNER AND SECURELY ATTACH TO BUILDING STRUCTURE OR WALL FRAMING.
   B. MID-SPAN SUPPORTS: FOR METAL WALL FRAMING: ANCHOR TO STRUCTURE ABOVE.
   C. PARTITION CORNERS: MINIMUM OF (3) STUDS.
10. AT AIR BARRIER WALLS PROVIDE:
   A. SEALANT BETWEEN RUNNERS AND SUBSTRATE.
   B. SEALANT BETWEEN WALL AND ADJACENT VERTICAL SURFACES.
   C. SEAL AIR BARRIER MEMBRANE TO ADJACENT SURFACE, FULL PERIMETER OF WALL.
   D. SEALANT AROUND ALL OPENINGS AT ELECTRICAL DEVICES, DUCTS, AND PIPING AND STRUCTURE PENETRATING WALL SURFACES.
11. REFER TO GENERAL SHEETS (**G-301**) FOR AIR BARRIER LOCATIONS.
12. AT STC RATED WALLS, PROVIDE:
   A. ACOUSTIC SEALANT BETWEEN RUNNERS AND SUBSTRATE.
   B. ACOUSTIC SEALANT BETWEEN STUDS AND ADJACENT VERTICAL SURFACES.
   C. ACOUSTIC SEALANT AROUND ALL OPENINGS AT ELECTRICAL DEVICES, DUCTS AND PIPING AND STRUCTURE PENETRATING SURFACES.

ASSEMBLY TYPES

E = EXTERIOR
R = ROOF
F = FLOOR
W = INTERIOR WOOD STUD
EW = EXTERIOR WOOD STUD
S = INTERIOR METAL STUD
C = CONCRETE
M = MASONRY
X = MISCELLANEOUS INTERIOR WALL MATERIAL

TOP OF WALL CONDITION

NOTE: ALL WALLS AND GWB EXTEND TO STRUCTURE, UNLESS NOTED OTHERWISE. REFER TO PARTITION HEIGHTS BELOW FOR WALLS THAT DO NOT EXTEND TO STRUCTURE. REFER ALSO TO STRUCTURAL SHEETS FOR LOCATIONS OF SHEAR WALL AND REQUIRED SHEATHING.

A. FULL HEIGHT WALL - STUDS EXTEND TO STRUCTURE, EXTEND GWB TO 6" ABOVE UPPERMOST CEILING ON BOTH SIDES OF WALL.

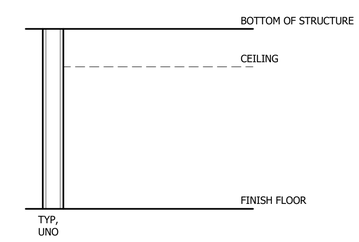

Call 811 two business days before you dig

SHEET 216 OF 226

BID SET

CAD NO.

NO.	REVISIONS	INT.	APP.	DATE
				10-04-2021

ACTION	BY	DATE
DESIGNED		01/03/2025
DRAWN		01/03/2025
CHECKED (FIELD)		
CHECKED (HDQTS.)		

10347 REGISTERED ARCHITECT JAMES HILL STATE OF WASHINGTON

REGISTERED STAMP

WASHINGTON STATE PARKS AND RECREATION COMMISSION

NISQUALLY STATE PARK

PHASE 3A MAINTENANCE BUILDING AND WWTF

WWTF - WALL, FLOOR, AND ROOF TYPES

A-501

SCALE

AS SHOWN

PARKS FILE#

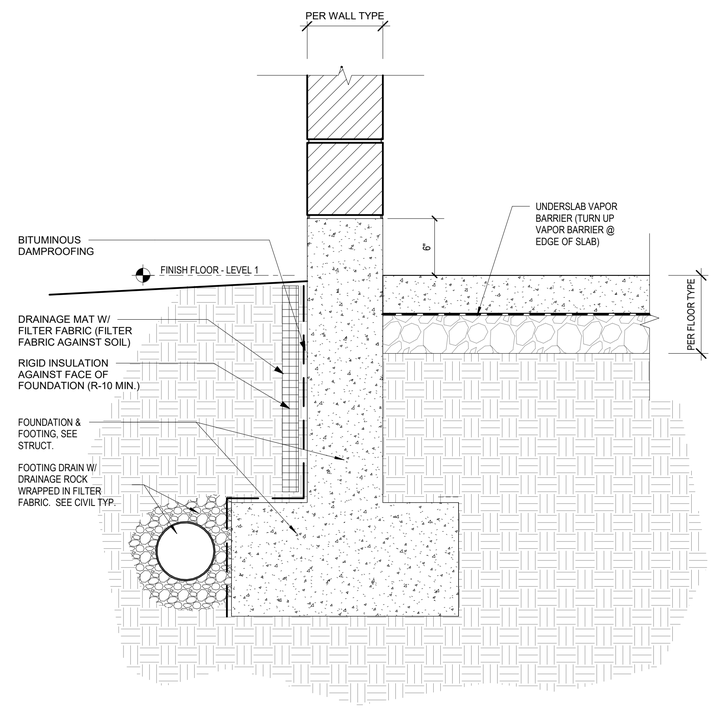

1 FOUNDATION & FOOTING DETAIL
1 1/2" = 1'-0"

Call 811 two business days before you dig

SHEET 217 OF 226

BID SET

CAD NO.

NO.	REVISIONS	INT.	APP.	DATE
				10-04-2021

ACTION	BY	DATE
DESIGNED		01/03/2025
DRAWN		01/03/2025
CHECKED (FIELD)		
CHECKED (HDQTS.)		

10347 REGISTERED ARCHITECT
JAMES HILL
STATE OF WASHINGTON

REGISTERED STAMP

WASHINGTON STATE PARKS AND RECREATION COMMISSION

NISQUALLY STATE PARK

PHASE 3A MAINTENANCE BUILDING AND WWTF

WWTF - FOUNDATION DETAILS

A-511

SCALE
AS SHOWN

PARKS FILE#

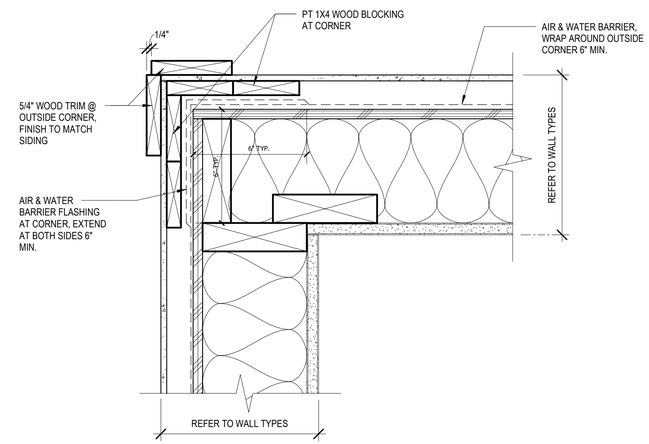

2 TYP. OUTSIDE CORNER @ SIDING1
3" = 1'-0"

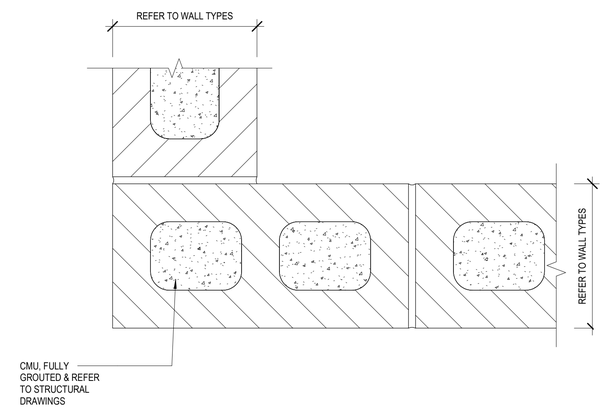

1 TYP. OUTSIDE CORNER @ CMU
3" = 1'-0"

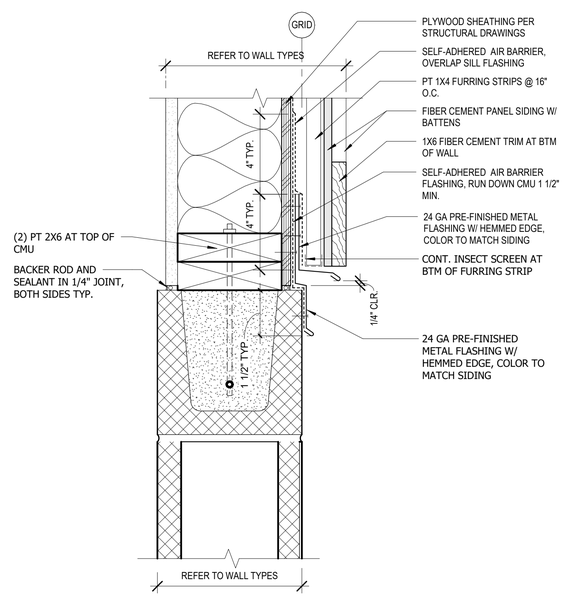

3 TYP. CMU/ WOOD STUD WALL TRANSITION
3" = 1'-0"

Call 811 two business days before you dig

SHEET 218 OF 226

BID SET

CAD NO.

NO.	REVISIONS	INT.	APP.	DATE
				10-04-2021

ACTION	BY	DATE
DESIGNED		01/03/2025
DRAWN		01/03/2025
CHECKED (FIELD)		
CHECKED (HDQTS.)		

10347 REGISTERED ARCHITECT
JAMES HILL
STATE OF WASHINGTON

REGISTERED STAMP

WASHINGTON STATE PARKS AND RECREATION COMMISSION

NISQUALLY STATE PARK

PHASE 3A MAINTENANCE BUILDING AND WWTF

WWTF - EXTERIOR WALL DETAILS

A-521

SCALE
AS SHOWN

PARKS FILE#

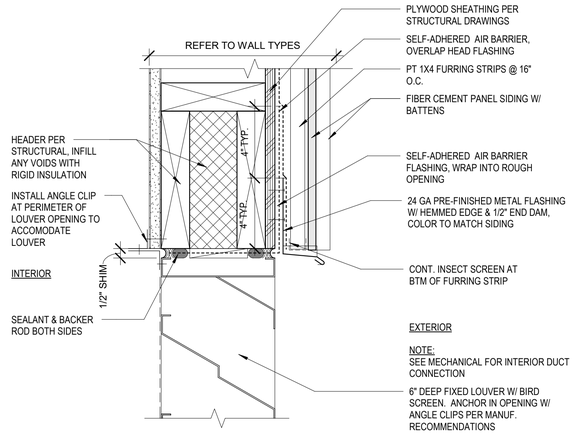

9 EXTERIOR HEAD @ LOUVER @ PANEL SIDING
3" = 1'-0"

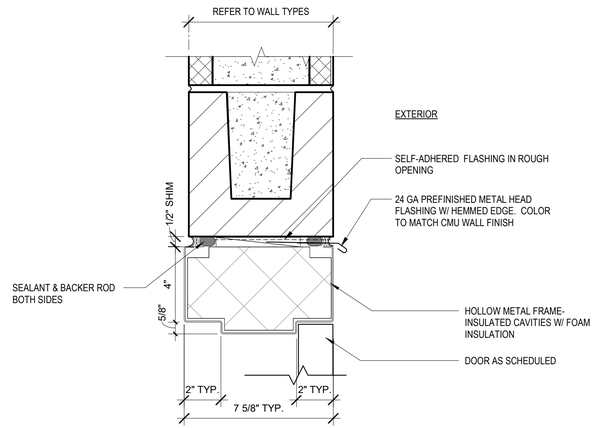

6 EXTERIOR HEAD @ H.M. DOOR
3" = 1'-0"

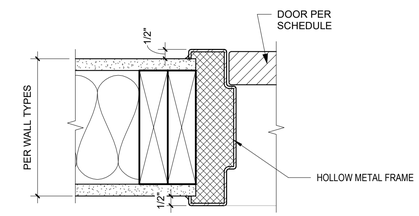

3 H.M. DOOR JAMB @ WOOD STUD WALL (INTERIOR)
3" = 1'-0"

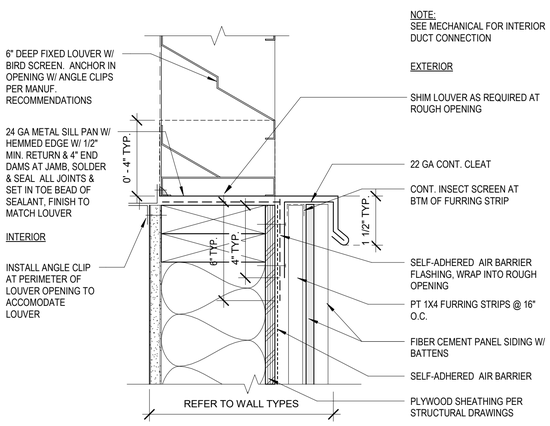

8 EXTERIOR SILL @ LOUVER @ PANEL SIDING
3" = 1'-0"

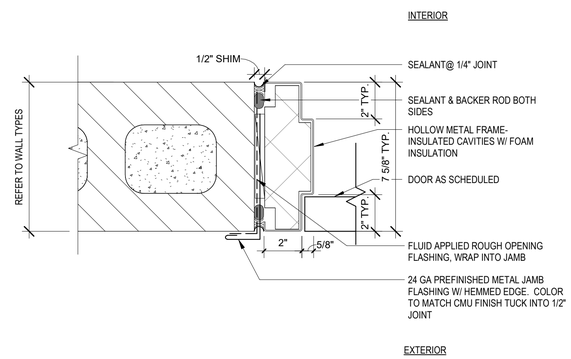

5 EXTERIOR H.M. DOOR JAMB
3" = 1'-0"

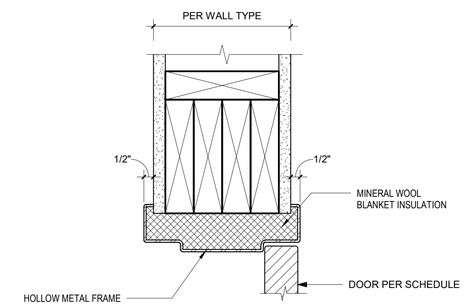

2 H.M. DOOR HEAD @ WOOD STUD WALL
3" = 1'-0"

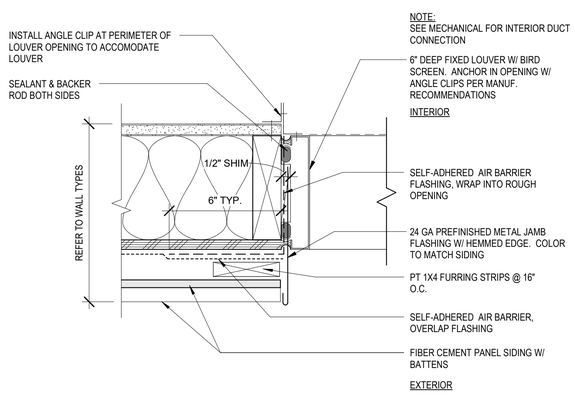

7 EXTERIOR JAMB @ LOUVER @ PANEL SIDING
3" = 1'-0"

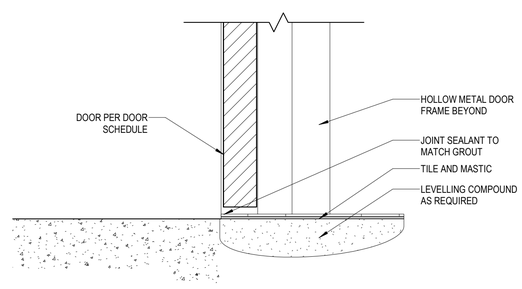

4 INTERIOR HM THRESHOLD
3" = 1'-0"

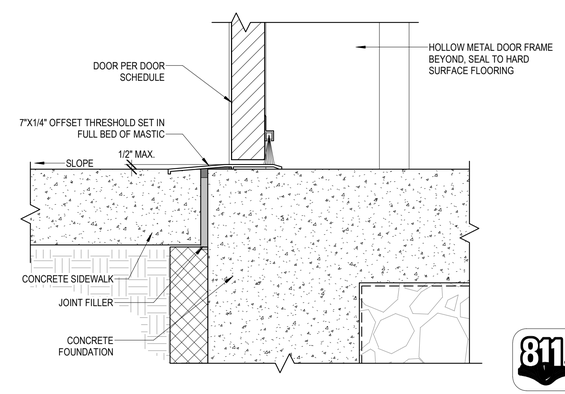

1 EXTERIOR HOLLOW METAL THRESHOLD
3" = 1'-0"

BID SET

Call 811 two business days before you dig

SHEET 219 OF 226

CAD NO.

NO.	REVISIONS	INT.	APP.	DATE
				10-04-2021

ACTION	BY	DATE
DESIGNED		01/03/2025
DRAWN		01/03/2025
CHECKED (FIELD)		
CHECKED (HDQTS.)		

10347 REGISTERED ARCHITECT JAMES HILL STATE OF WASHINGTON

REGISTERED STAMP

WASHINGTON STATE PARKS AND RECREATION COMMISSION

NISQUALLY STATE PARK

PHASE 3A MAINTENANCE BUILDING AND WWTF

WWTF - DOOR, FRAME & WINDOW DETAILS

A-541

SCALE

AS SHOWN

PARKS FILE#

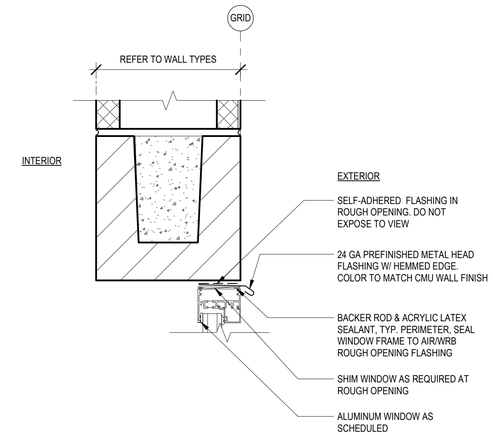

3 TYP. WINDOW HEAD @ CMU

3" = 1'-0"

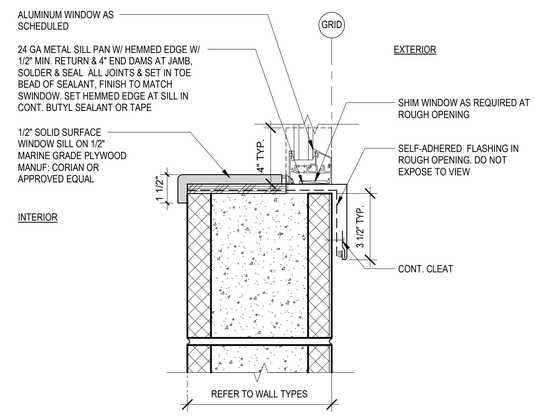

2 TYP. WINDOW SILL AT CMU

3" = 1'-0"

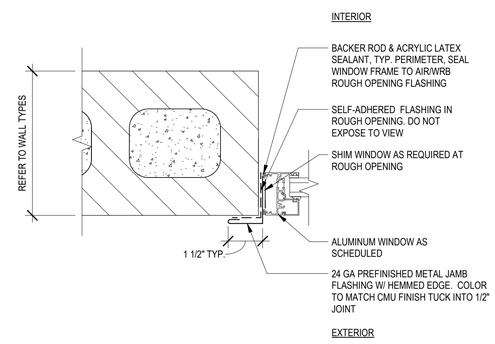

1 TYP. WINDOW JAMB @ CMU

3" = 1'-0"

Call 811 two business days before you dig

SHEET 220 OF 226

BID SET

CAD NO.		
10-04-2021		DATE
		APP.
		INT.
		REVISIONS
		NO.

ACTION	BY	DATE
DESIGNED		01/03/2025
DRAWN		01/03/2025
CHECKED (FIELD)		
CHECKED (HDQTS.)		

10347 REGISTERED ARCHITECT JAMES HILL STATE OF WASHINGTON

REGISTERED STAMP

WASHINGTON STATE PARKS AND RECREATION COMMISSION

NISQUALLY STATE PARK

PHASE 3A MAINTENANCE BUILDING AND WWTF

WINDOW DETAILS

A-542

SCALE

AS SHOWN

PARKS FILE#

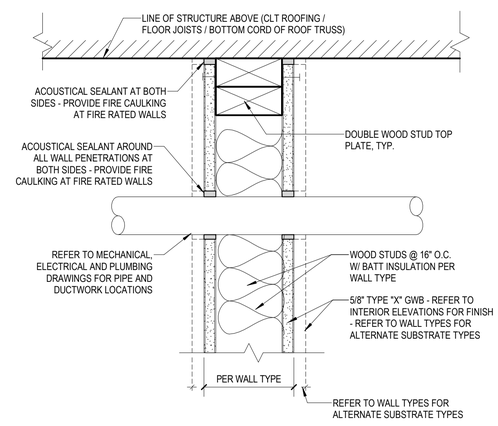

1 WALL TYPE DETAIL @ FULL HEIGHT TO STRUCTURE
3" = 1'-0"

Call 811 two business days before you dig

SHEET 221 OF 226

BID SET

CAD NO.

10-04-2021	DATE
	APP.
	INT.
	REVISIONS
	NO.

ACTION	BY	DATE
DESIGNED		01/03/2025
DRAWN		01/03/2025
CHECKED (FIELD)		
CHECKED (HDQTS.)		

10347 REGISTERED ARCHITECT
JAMES HILL
STATE OF WASHINGTON

REGISTERED STAMP

WASHINGTON STATE PARKS AND RECREATION COMMISSION

NISQUALLY STATE PARK

PHASE 3A MAINTENANCE BUILDING AND WWTF

WWTF - CEILING DETAILS

A-561

SCALE
AS SHOWN

PARKS FILE#

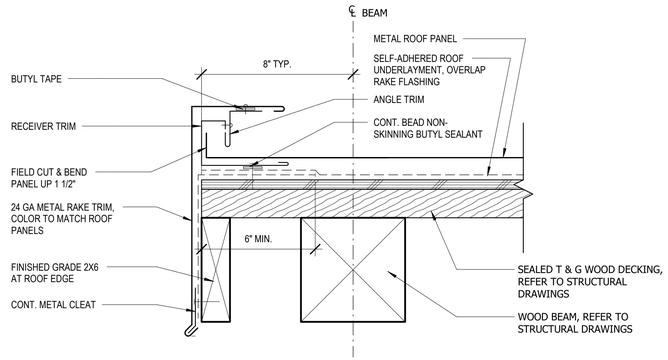

4 TYP. RAKE @ METAL ROOF
3" = 1'-0"

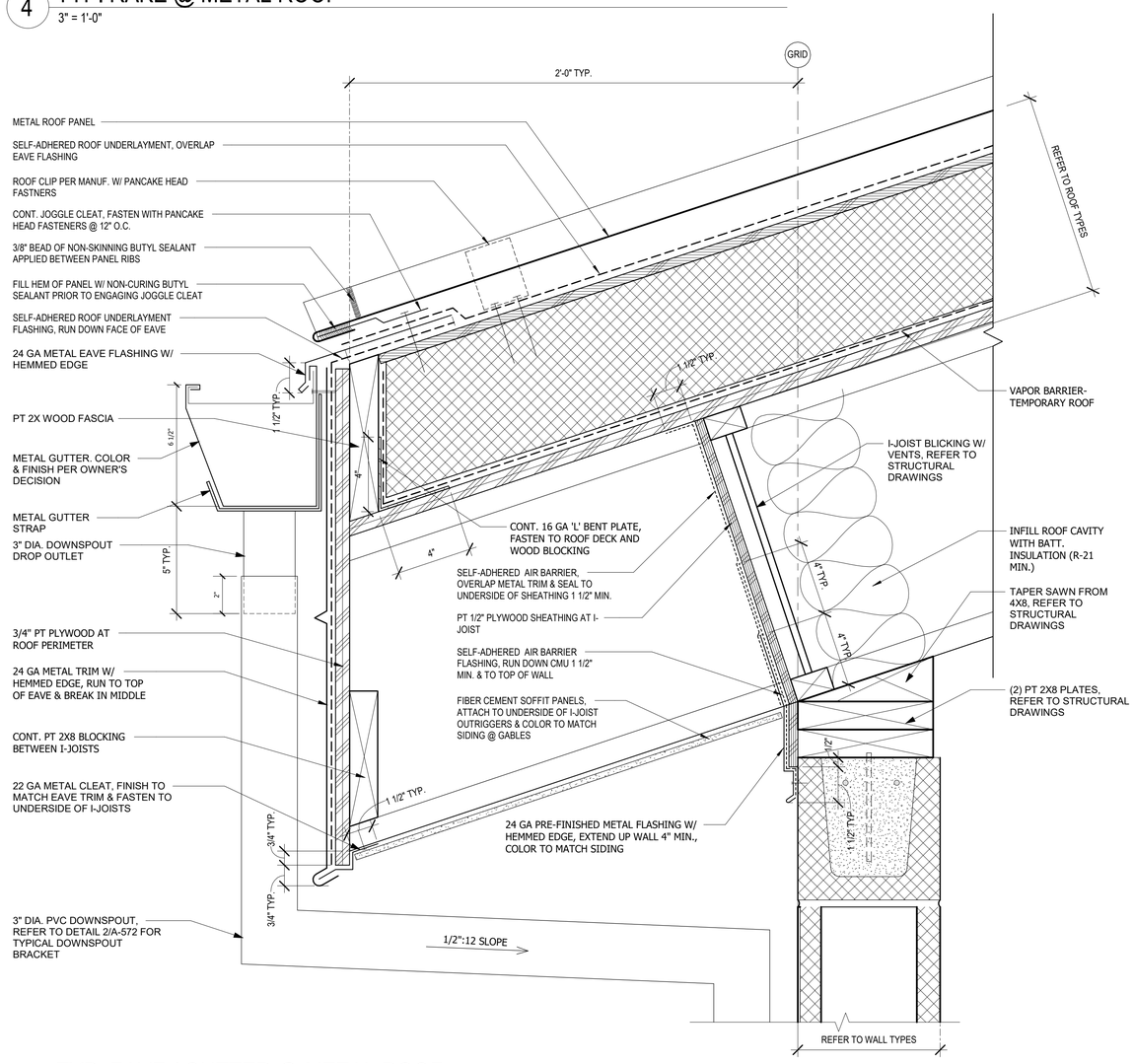

3 TYP. EAVE / GUTTER @ METAL ROOF
3" = 1'-0"

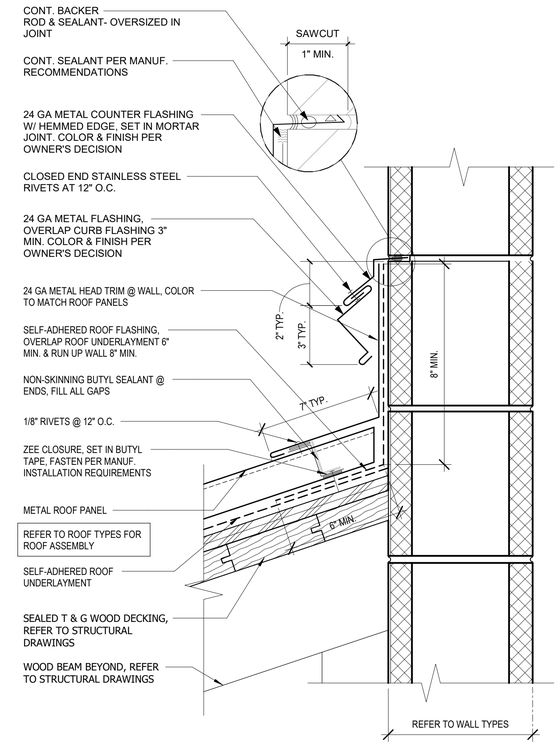

2 TYP. ROOF AT WALL
3" = 1'-0"

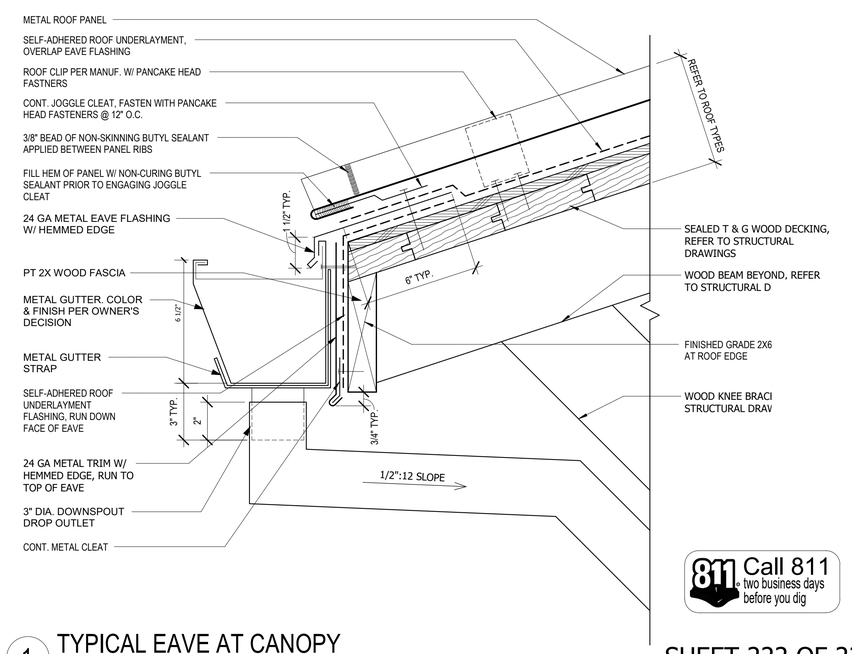

1 TYPICAL EAVE AT CANOPY
3" = 1'-0"

BID SET

Call 811 two business days before you dig

SHEET 222 OF 226

CAD NO.

NO.	REVISIONS	INT.	APP.	DATE
				10-04-2021

ACTION	BY	DATE
DESIGNED		01/03/2025
DRAWN		01/03/2025
CHECKED (FIELD)		
CHECKED (HDQTS.)		

10347 REGISTERED ARCHITECT JAMES HILL STATE OF WASHINGTON

REGISTERED STAMP

WASHINGTON STATE PARKS AND RECREATION COMMISSION

NISQUALLY STATE PARK

PHASE 3A MAINTENANCE BUILDING AND WWTF

WWTF - ROOF DETAILS

A-571

SCALE
AS SHOWN

PARKS FILE#

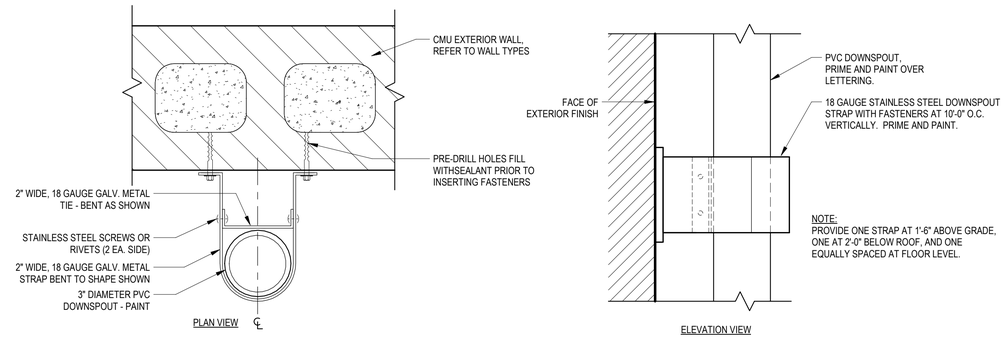

2 TYP. DOWNSPOUT BRACKET

3" = 1'-0"

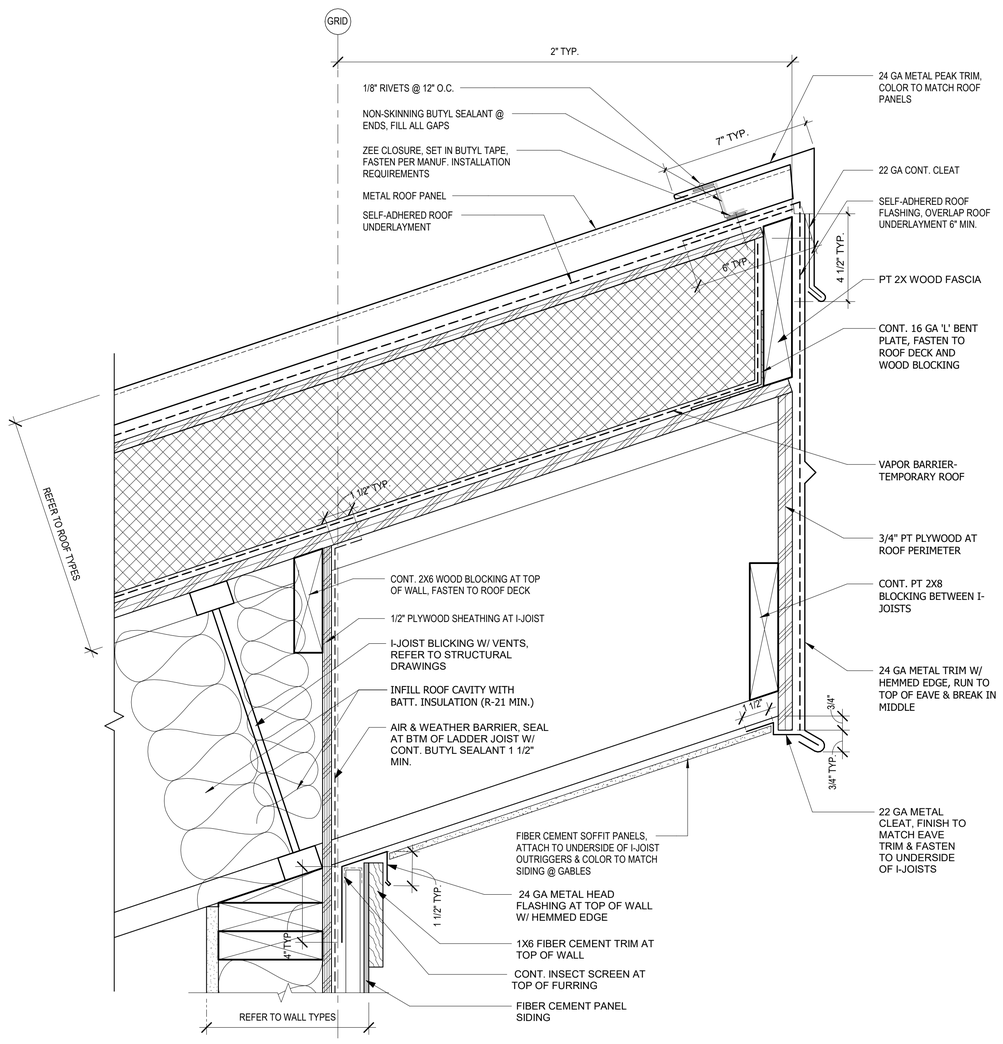

3 TYP. PEAK @ UPPER ROOF

3" = 1'-0"

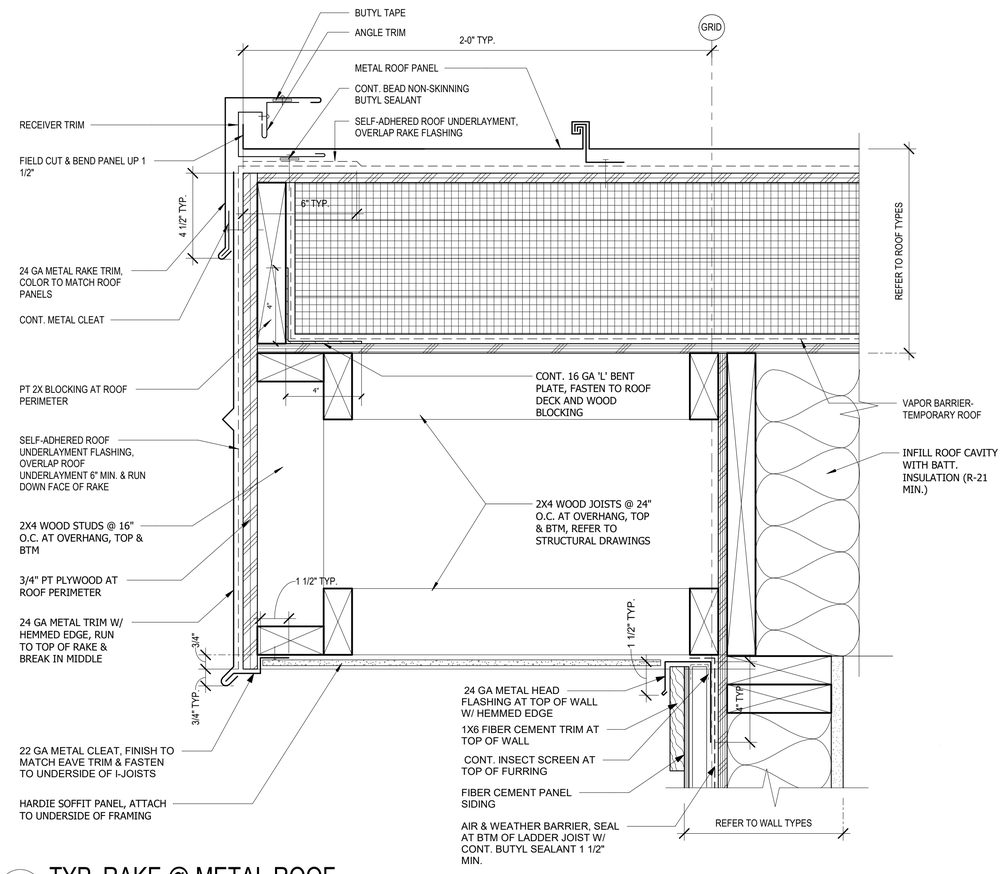

1 TYP. RAKE @ METAL ROOF

3" = 1'-0"

Call 811 two business days before you dig

SHEET 223 OF 226

BID SET

CAD NO.

NO.	REVISIONS	INT.	APP.	DATE
				10-04-2021

ACTION	BY	DATE
DESIGNED		01/03/2025
DRAWN		01/03/2025
CHECKED (FIELD)		
CHECKED (HDQTS.)		

10347 REGISTERED ARCHITECT JAMES HILL STATE OF WASHINGTON

REGISTERED STAMP

WASHINGTON STATE PARKS AND RECREATION COMMISSION

NISQUALLY STATE PARK

PHASE 3A MAINTENANCE BUILDING AND WWTF

WWTF - ROOF DETAILS

A-572

SCALE

AS SHOWN

PARKS FILE#

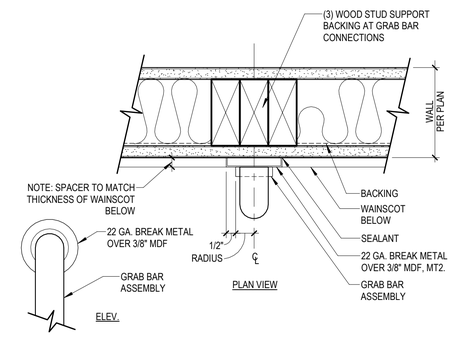

1 GRAB BAR DETAIL

3" = 1'-0"

Call 811 two business days before you dig

SHEET 224 OF 226

BID SET

CAD NO.

NO.	REVISIONS	INT.	APP.	DATE
				10-04-2021

ACTION	BY	DATE
DESIGNED		01/03/2025
DRAWN		01/03/2025
CHECKED (FIELD)		
CHECKED (HDQTS.)		

10347 REGISTERED ARCHITECT
JAMES HILL
STATE OF WASHINGTON

REGISTERED STAMP

WASHINGTON STATE PARKS AND RECREATION COMMISSION

NISQUALLY STATE PARK

PHASE 3A MAINTENANCE BUILDING AND WWTF

WWTF - MISCELLANEOUS DETAILS

A-585

SCALE

AS SHOWN

PARKS FILE#

DOOR SCHEDULE

NO.	ROOM NAME	DOOR TYPE	DOOR WIDTH	DOOR HEIGHT	DOOR THICKNESS	DOOR MATERIAL	DOOR FINISH	DOOR GLAZING	FRAME TYPE	FRAME MATERIAL	FRAME FINISH	HARDWARE GROUP	REMARKS
101B	CONTROL ROOM	A	3' - 0"	7' - 0"	1 3/4"	HM	PT	-	F1	HM	PT	2	
101C	CONTROL ROOM	A	3' - 0"	7' - 0"	2"	HM	PT	-	F1	HM	PT	14	
102A	TOILET	A	3' - 0"	7' - 0"	2"	HM	PT	-	F1	HM	PT	10	
103A	ELECTRICAL	A	3' - 0"	7' - 0"	2"	HM	PT	-	F1	HM	PT	15	
103B	ELECTRICAL	A	3' - 0"	7' - 0"	1 3/4"	HM	PT	-	F1	HM	PT	16	
104A	MECHANICAL	B	10' - 4"	9' - 0"	1 3/4"	HM	PT	-	F1	HM	PT	11	
104B	MECHANICAL	B	6' - 4"	7' - 0"	1 3/4"	HM	PT	-	F1	HM	PT	5	

WINDOW TYPES

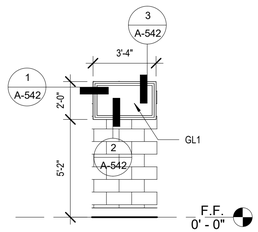

W1 40" X 24" FIXED ALUMINUM WINDOW

LOUVER TYPES

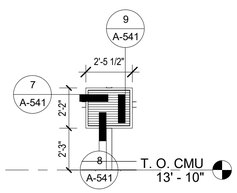

L1 LOUVER

DOOR TYPES

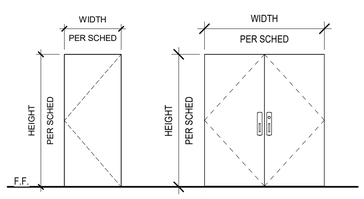

A FLUSH - INSULATED HOLLOW METAL DOOR

B FLUSH - HOLLOW METAL DOUBLE DOOR

DOOR FRAMES

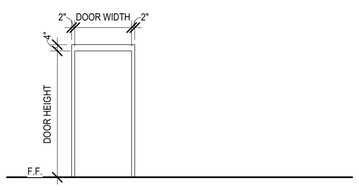

HOLLOW METAL: F1

SIGNAGE LEGEND

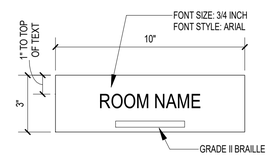

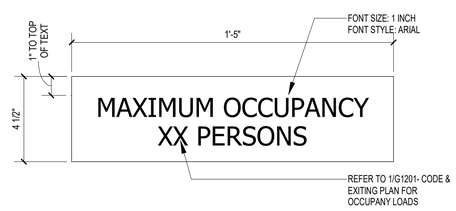

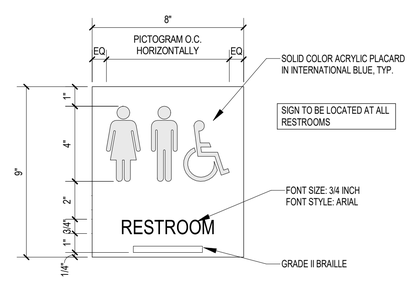

NOTE: PICTOGRAM IN WHITE BACKGROUND IN BLUE PER IBC 2015 (WAC 2015) 1101.2.6 (ICC A117.1 SECTION 703.6.3.1)

DOOR & FRAME NOTES

1. DOOR & FRAME SCHEDULE NOTES APPLY TO ALL DOOR & FRAME.
2. DIMENSIONS OF ALL OPENINGS TO BE FIELD VERIFIED PRIOR TO FABRICATION.
3. PROVIDE 1/2" MAX SHIM SPACE AT HEAD, JAMB AND SILL AT OPENINGS.
4. FRAME MANUFACTURER SHALL COORDINATE LOCATIONS OF CONCEALED CONDUIT & J-BOXES FOR SYSTEM HARDWARE PRIOR TO MANUFACTURING OF FRAMES & COORDINATE WITH ASSOCIATED HARDWARE & DEVICES.
5. SEE SPECIFICATIONS SECTION 08 71 00 DOOR HARDWARE FOR DOOR HARWARE SET NOTED IN DOOR SPECIFICATIONS OPENING SCHEDULE.
6. ALL HOLLOW METAL DOORS AND FRAMES ARE TO BE PAINTED.
7. ALL DOOR HARDWARE TO CONFORM WITH A.D.A. STANDARDS.
8. ALL DOOR HARDWARE HEIGHTS TO CONFORM WITH A.D.A. STANDARDS.
9. PRIOR TO CONSTRUCTION, SUBMIT DOOR HARDWARE TO ARCHITECT FOR APPROVAL.
10. CONFIRM DOOR FRAME DIMENSIONS AND COMPATIBILITY WITH DOOR HARDWARE PRIOR TO IMPLEMENTATION.
11. SHOP PRIME ALL HOLLOW METAL FRAMES.
12. REFER TO FINISH LEGEND FOR ALL DOOR AND FRAME FINISH REFERENCES.
13. PROVIDE ACOUSTICAL INSULATION AND SEALANTS AT DOOR AND FRAMES INSTALLED .
14. DOORS THAT ARE NOT AUTOMATIC SHALL HAVE ACCESSIBLE FEATURES AND HARDWARE PER CURRENT IBC AND ANSI 117
15. EXITING DOORS SHALL HAVE APPROVED PANIC HARDWARE PER CURRENT IBC
16. TACTILE SIGNS SHALL BE INSTALLED AS PER CURRENT IBC AND ANSI 117

ABBREVIATIONS:

ALUM	ALUMINUM
POLY	HONEYCOMB POLYMER CORE
FF	FACTORY FINISH
SL	STAINED AND LAQUERED
HM	HOLLOW METAL
TEMP	TEMPERED GLAZING
P	PAINT
WD	WOOD
GD	GARAGE DOOR
F	FLUSH- INSULATED HOLLOW METAL DOOR
E	EXTERIOR

GLAZING TYPES

GL1- HIGH PERFORMANCE LOW-E INSULATED OBSURE GLASS
U-VALUE: 0.38 MIN.
VISIBLE TRANSMISSION: 70% MIN.
SHGC: 0.39 MAXIMUM

WINDOW TYPE NOTES

1. ALL WINDOWS SHOULD BE RATED WITH U-FACTOR, SHGC, VT AND LEAKAGE RATING

2. U-FACTOR AND SHGC RATING TO COMPLY WITH TABLE C402.2 OF WASHINGTON STATE ENERGY CODE

Call 811 two business days before you dig

SHEET 225 OF 226

BID SET

CAD NO.

NO.	REVISIONS	INT.	APP.	DATE
	NOT FOR CONSTRUCTION			10-04-2021

ACTION	BY	DATE
DESIGNED		01/03/2025
DRAWN		01/03/2025
CHECKED (FIELD)		
CHECKED (HDQTS.)		

10347 REGISTERED ARCHITECT JAMES HILL STATE OF WASHINGTON

REGISTERED STAMP

WASHINGTON STATE PARKS AND RECREATION COMMISSION

NISQUALLY STATE PARK

PHASE 3A MAINTENANCE BUILDING AND WWTF

WWTF - DOOR & FRAME SCHEDULE

A-601

SCALE

AS SHOWN

PARKS FILE#

FINISH SCHEDULE

ROOM NO.	ROOM NAME	FLOOR	BASE	WALLS	CEILINGS	NOTES
101	CONTROL ROOM	C-1	RB	PT1	GWB	
102	TOILET	C-1 /CT-1	CT-3	PT1 /CT-2	GWB	
103	ELECTRICAL	C-1	RB	PT1	GWB	
104	MECHANICAL	C-1	RB	PT1	OTS	
201	MEZZANINE	PLYWD	RB	PT1	OTS	

INTERIOR FINISH LEGEND

*BASIS OF DESIGN - ARCHITECT HAS FULL SELECTION OF COLOR

	Tag	Material	Manufacturer	Product	Notes
FLOOR	C-1	CONCRETE - SEALED	-	PER ARCHITECTURAL SPECIFICATIONS	(REFER TO SPECIFICATIONS)
	CT-1	PORCELAIN TILE (FIELD)	DALTILE	DAPPLE GRAY, DK-326, 2"X2" CERAMIC MOSAIC TILE	2" x 2" (REFER TO DRAWINGS)
WALLS	PT-1	PAINT (FIELD)	PARKER PAINT	ULTRATECHL C122; EGGSHELL ENAMEL; COLOR: CL 2851 W FILTERED	
	CT-2	PORCELAIN TILE (FIELD)	DALTILE	PEPPER WHITE, D-147, 4 1/4"X4 1/4" SEMI-GLOSS GLAZED CERAMIC TILE	(REFER TO DRAWINGS)
	CG-1	CORNER GUARD	CUSTOM FABRICATED	STAINLESS STEEL, #4 SATIN - 16 GA W/ 2" LEGS X 38" HIGH	
BASE	RB-1	RUBBER BASE	ARMSTRONG	STYLE; COVED WALL BASE / COLOR: GREY MIST, 4" BASE	(REFER TO DRAWINGS)
	CT-3	PORCELAIN TILE (COVED TRIM)		DESERT GRAY, D-X114, 4 1/4"X4 1/4" SEMI-GLOSS GLAZED CERAMIC TILE	(REFER TO DRAWINGS)
CASEWORK					
CEILING	GWB-1	PAINTED GYPSUM DRYWALL	PARKER PAINT	ULTRA TECH C122 EGGSHELL ENAMEL	MATCH ADJACENT WALL
	OTS	OPEN TO STRUCTURE			(REFER TO DRAWINGS)
DOORS	DF-1	DOOR FRAME (HM - PAINT)	PARKER PAINT	ULTRATECH C144 SEMI-GLOSS ENAMEL, CLW1043W "FOSSIL DUST"	(REFER TO DRAWINGS)
	DF-2	SOLID CORE DOOR- PLAM & PAINT	PARKER PAINT	ULTRATECH C144 SEMI-GLOSS ENAMEL, C2851W "FILTERED"	(REFER TO DRAWINGS)

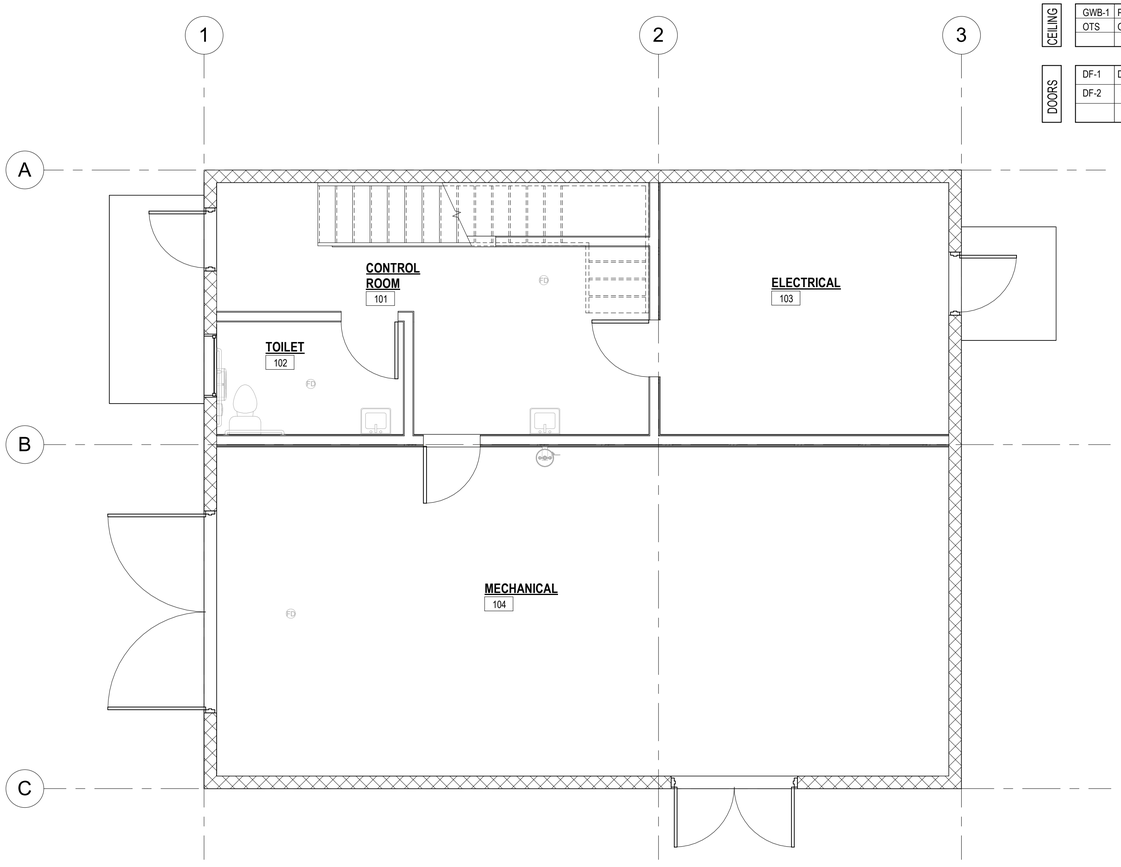

1 LEVEL 1 - FINISH FLOOR PLAN
1/4" = 1'-0"

FINISH PLAN NOTES

1. ALL INTERIOR SHALL MEET THE CURRENT IBC FOR FLAME SPREAD AND SMOKE DEVELOPMENT MINIMUM STANDARDS.
2. REFER TO 'FINISH LEGEND' AND PROJECT SPECIFICATION MANUAL FOR INTERIOR FINISH CALL-OUTS AND MANUFACTURES.
3. REFER TO 'DOOR SCHEDULE' FOR DOOR AND FRAME FINISH.
4. REFER TO 'REFLECTED CEILING PLAN' FOR CEILING FINISHES.
5. REFER TO 'INTERIOR ELEVATIONS', AND 'MOUNTING HEIGHT SHEET' FOR DIMENSIONS AND PATTERNS.
6. SV1 "GRAIN" SHALL BE PERPENDICULAR TO DOOR/ ENTRY OPENING U.N.O.
7. ALL INTERIOR WALL OR CEILING FINISHES SHALL BE CLASS A OR B TO COMPLY WITH NFPA101 TABLE 10.2.2.

INTERIOR FINISH FLOOR PLAN LEGEND

SEALED CONCRETE, REFER TO ARCHITECTURAL SPECIFICATIONS

BID SET

Call 811 two business days before you dig

SHEET 226 OF 226

CAD NO.

10-04-2021	DATE
	APP.
	INT.
NOT FOR CONSTRUCTION	REVISIONS
	NO.

ACTION	BY	DATE
DESIGNED		01/03/2025
DRAWN		01/03/2025
CHECKED (FIELD)		
CHECKED (HDQTS.)		

10347 REGISTERED ARCHITECT
JAMES HILL
STATE OF WASHINGTON

REGISTERED STAMP

WASHINGTON STATE PARKS AND RECREATION COMMISSION

NISQUALLY STATE PARK

PHASE 3A MAINTENANCE BUILDING AND WWTF

WWTF - FINISH SCHEDULE

A-621

SCALE
AS SHOWN

PARKS FILE#